SkyView SE
SkyView Classic
SkyView Touch
SkyView HDX

System Installation Guide

Document ~~101320-032,~~101320-034, Revision ~~AG~~ AI

For use with software version ~~v15.4~~v16.0

~~April 2020~~
February 2021

Contact Information

Dynon Avionics, Inc.
19825 141st Place NE
Woodinville, WA 98072
Phone: 425-402-0433 - 8:00 AM – 5:00 PM (Pacific Time) Monday – Friday
Dynon Avionics Technical Support available 7:~~00~~30 AM–4:00 PM (Pacific Time) Monday – Friday
Email: mailto://support@dynonavionics.com
~~Fax: 425-984-1751~~

Dynon Avionics offers a number of Internet sites for support:
http://www.dynonavionics.com – Dynon Avionics primary web site; including:
http://docs.dynonavionics.com – Current and archival documentation.
http://downloads.dynonavionics.com – Software downloads.
http://license.dynonavionics.com – Redeem SV-MAP-270, SV-SYNVIS-280, and SV-VPX-290 licenses.
http://store.dynonavionics.com – Dynon Avionics' *secure* online store for purchasing all Dynon Avionics products.
http://register.dynonavionics.com – Register your Dynon Avionics product.
http://support.dynonavionics.com – Support resources.

Stay in touch with Dynon Avionics:
http://blog.dynonavionics.com – Dynon Avionics' blog.
https://www.facebook.com/dynonavionics - Dynon Avionics is on Facebook. Please "friend" us!
http://forum.dynonavionics.com – Dynon Avionics' Internet forum for SkyView pilots.
http://newsletter.dynonavionics.com – Dynon Avionics' email newsletter.
https://twitter.com/dynon - Dynon Avionics is on Twitter!

Training
http://www.dynonavionics.com/videos – Video training, including short vignettes on specific operations.
http://www.dynonavionics.com/training – Hands-on training at various events.

Copyright

©~~2020~~2021 Dynon Avionics, Inc. All rights reserved. No part of this manual may be reproduced, copied, transmitted, disseminated or stored in any storage medium, for any purpose without the express written permission of Dynon Avionics. Dynon Avionics hereby grants permission to download a single copy of this manual and of any revision to this manual onto a hard drive or other electronic storage medium to be viewed for personal use, provided that such electronic or printed copy of this manual or revision must contain the complete text of this copyright notice and provided further that any unauthorized commercial distribution of this manual or any revision hereto is strictly prohibited.

Information in this document is subject to change without notice. Dynon Avionics reserves the right to change or improve its products and to make changes in the content without obligation to notify any person or organization of such changes. Visit the Dynon Avionics website (www.dynonavionics.com) for current updates and supplemental information concerning the use and operation of this and other Dynon Avionics products.

Limited Warranty

Dynon Avionics warrants this product to be free from defects in materials and workmanship for three years from date of shipment. Dynon Avionics will, at its sole option, repair or replace any components that fail in normal use. Such repairs or replacement will be made at no charge to the customer for parts or labor performed by Dynon Avionics. The customer is, however, responsible for any transportation cost and any costs that are incurred while removing, reinstalling, or troubleshooting the product. This warranty does not cover failures due to abuse, misuse, accident, improper installation or unauthorized alteration or repairs.

THE WARRANTIES AND REMEDIES CONTAINED HEREIN ARE EXCLUSIVE, AND IN LIEU OF ALL OTHER WARRANTIES EXPRESSED OR IMPLIED, INCLUDING ANY LIABILITY ARISING UNDER WARRANTY OF MERCHANTABILITY OR FITNESS FOR A PARTICULAR PURPOSE, STATUTORY OR OTHERWISE. THIS WARRANTY GIVES YOU SPECIFIC LEGAL RIGHTS, WHICH MAY VARY FROM STATE TO STATE AND IN COUNTRIES OTHER THAN THE USA.

IN NO EVENT SHALL DYNON AVIONICS BE LIABLE FOR ANY INCIDENTAL, SPECIAL, INDIRECT OR CONSEQUENTIAL DAMAGES, WHETHER RESULTING FROM THE USE, MISUSE OR INABILITY TO USE THIS PRODUCT OR FROM DEFECTS IN THE PRODUCT. SOME STATES AND COUNTRIES DO NOT ALLOW THE EXCLUSION OF INCIDENTAL OR CONSEQUENTIAL DAMAGES, SO THE ABOVE LIMITATIONS MAY NOT APPLY TO YOU.

Dynon Avionics retains the exclusive right to repair or replace the instrument or Software or offer a full refund of the purchase price at its sole discretion. SUCH REMEDY SHALL BE YOUR SOLE AND EXCLUSIVE REMEDY FOR ANY BREACH OF WARRANTY.

These instruments are not intended for use in type certificated aircraft at this time. Dynon Avionics makes no claim as to the suitability of its products in connection with FAR 91.205.

Dynon Avionics' products incorporate a variety of precise, sensitive electronics. SkyView products do not contain any field/user-serviceable parts. Units found to have been taken apart may not be eligible for repair under warranty. Additionally, once a Dynon Avionics unit is opened up, it is not considered airworthy and must be serviced at the factory.

Dynon Avionics Returns and Warranty web page can be found at http://support.dynonavionics.com.

Changes in this Revision

Revision	Revision Date	Description
Revision History for previous revisions is located in Appendix I: SkyView System Installation Guide Revision History.		
AI	February 2021	• Added AvPlan EFB to Aviation Data list of databases in Section 6.
AH	January, 2021	• Updated GPS Data section in SV-XPNDR-261/262 Settings. • Added new Flight ID subsection to SV-XPNDR-261/262 Settings. • Added new Other ADS-B Settings for Ghost Targets. • Added Trim Motor Pulse Rate configuration info to SkyView Configuration for SV-AP-PANEL (Trim Motor Control) section. • Updated Appendix E: Serial Data Output to include Serial Data Stream.
AG	April, 2020	• Updated Section7: SV-EMS-220/221 Installation and Configuration with new Kavlico Oil Pressure Sensors, Fuel Pressure Sensors, and Coolant & Other Pressure Sensors. • Updated Section 27: Kavlico Pressure Sensor Part Numbers with new Kavlico Oil Pressure Sensors, Fuel Pressure Sensors, and Coolant & Other Pressure Sensors.
AF	November, 2019	• Updated Section 1, Introduction (component list) to include SV-COM-X25. • Updated Section 2, System Planning, Table 4, 5, 6 to include SV-COM-X25 / SV-COM-T25. • Updated Section 17: SV-COM-X83 Installation and Configuration to include SV-COM-X25. o Changed all instances of SV-COM-X83 to 'SV-COM-X25/X83' or 'and SV-COM-X25'. o Changed all instances of SV-COM-T8 to 'SV-COM-T25/T8' or 'and SV-COM-T25'. o Updated Figures 187, 191, 192, and 193 to include SV-COM-X25 / SV-COM-T25. • Updated Section 22, Appendix B: Specifications: o Added new Table 107, SV-COM-X25 (TY91LA VHF Radio Unit) Technical Specifications. o Following tables renumbered accordingly. o Updated renumbered Table 109 to include SV-COM-T25. • Updated Section 23, Appendix C: Wiring and Electrical Connections: o Changed all instances of SV-COM-X83 to 'SV-COM-X25/X83' or 'and SV-COM-X25'. o Changed all instances of SV-COM-T8 to 'SV-COM-T25/T8' or 'and SV-COM-T25'.
AE	April, 2019	• Added capability to update SV-GPS-2020 • Added multiple gear down indicators • Added Tie Flight Plan Source to HSI Source configuration setting • Removed dual C25 radio wiring diagrams. Dual radio installations should use audio panels • Corrected incorrect revision level in some footers • Removed redundant copyright notice on front page • Corrected typo in VP-X licensing discussion • Corrected VP-X HDX compatibility statement • Corrected transponder co-ax adapter gender error • Updated Custom Document Properties for part number and revision level changes
AD	February, 2018	• Added capability to update SV-ADSB-472 software. • Added Vo maneuvering speed to airspeed limitations. • Updated EMS Sensor Configuration file: o Added: Both polarities of amp shunt are available o Changed: Main voltage supports up to 34 volts o Added: CO Guardian support
AC	December, 2017	• Added airspeed limitations for multi-engine airplanes • Added yaw damper support • Added metric support to weight and balance • Added Rotax 912iS faults • Added VPX support to HDX • Updated transponder software in v15.2 corrects glider auto ALT airspeed • Updated pitot/static test instructions to reflect new pitot/static test mode • Updated Rotax 914 tachometer connection instructions to use high voltage rpm input
AB	March, 2017	• Corrected dimensions and weight of HDX800 • Added SV-ADSB-472 installation information
AA	December, 2016	• Improvements: o Corrected table of contents missing links o Corrected misc. formatting issues o Updated Table 75 adding missing transponder harness wire colors

Table 1 – Changes in this Revision of SkyView Classic / SkyView SE / SkyView HDX System Installation Guide

Table of Contents

1. Introduction **1-1**

Warning 1-2
Dynon Avionics Product Registration 1-2
About this Guide 1-3
Semantics of “Firmware” vs “Software” 1-4
SkyView Classic, SkyView Touch, SkyView SE, and SkyView HDX 1-4
Special Light Sport Aircraft (S-LSA) Considerations with SkyView 1-4
Getting Started 1-5

2. System Planning **2-1**

SkyView units cannot / should not be mixed 2-1
9-pin D9F and D9M Connectors are SkyView Network (*not* RS-232 Serial) 2-2
SkyView Network is a “Party Line” 2-2
External Switches and Indicators 2-3
SkyView Display Resolution 2-3
SkyView System Maximum Number of Displays 2-3
Power Specifications 2-4
Major Unit Physical Specifications 2-6
Temperature Specifications 2-7
General System Installation Tips 2-8
SkyView System Can Be On During Engine Start 2-8
Installing SkyView in an IFR-Equipped Aircraft 2-8
Mounting Requirements 2-9
SkyView System Construction 2-9
Example SkyView Systems 2-14
HSI Requirements 2-18

3. Basic SkyView Display Operation **3-1**

Screen Synchronization 3-1
Display Bezel Layout 3-2
Joystick and Button Operation 3-3
SkyView Touch – Touch Interface Features Not Used in Setup Menus 3-5
Menu Navigation 3-6
Basic Display Operation Procedures 3-7
- In Flight Setup Menu 3-9
- SETUP MENU 3-10
- SYSTEM EVENT Menu 3-10
- SYSTEM SOFTWARE Menu 3-11
- SYSTEM SETUP Menu 3-12
- LOCAL DISPLAY SETUP Menu 3-13
- PFD SETUP Menu 3-14
- EMS SETUP Menu 3-15
- MAP SETUP Menu 3-15
- AUTOPILOT SETUP Menu 3-16
- TRANSPONDER SETUP Menu 3-16
- HARDWARE CALIBRATION Menu 3-16

Software Updates and File Operations 3-17
- How to Update Software 3-18
- How to Export System Settings 3-19
- How to Load and Delete Files 3-19

How to Export Data Logs and Waypoints 3-19

4. SkyView Display Installation and Configuration 4-1

Physical Installation 4-2
Location Requirements for SkyView Displays 4-2
Electrical Installation 4-17
Power Input 4-17
Grounding 4-17
Airplane Master Contactor / Relay Considerations 4-17
SV-BAT-320 Connection and Operation Rules 4-17
SkyView Network Connectors 4-18
Network Setup and Status 4-18
Ethernet Connection 4-21
Internal Time Keeping 4-21
RS-232 Serial Devices 4-21
USB Usage and Accessibility 4-32
External Dim Control (Dimming) Connections 4-33
Contact Inputs 4-35
Reserved Connections for Future Use 4-35
Display Setup 4-36
How to Access Display Hardware Information 4-36
Serial Port Configuration 4-36
Brightness Setup 4-38
Top Bar Setup 4-39
Aircraft Information 4-39
SkyView Classic, SkyView SE Screen Layout Setup 4-40
SkyView HDX Display Setup / Layout 4-41
SkyView Classic and SkyView HDX Touch Setup 4-42
Glide Ring Setup 4-42
Weight and Balance Setup 4-43
Maintenance Log Setup 4-44

5. SV-ADAHRS-200/201 Installation and Configuration 5-1

Optional Components for Easier Installation of your SV-ADAHRS-200/201 5-3
Physical Installation 5-4
SV-ADAHRS-200/201 Location Requirements 5-4
SkyView Network Connection 5-12
Pneumatic Ports 5-12
Compass Calibration 5-13
On-ground Compass Calibration Procedure: 5-14
In-flight Compass Calibration Procedure: 5-15
SV-OAT-340 Location and Installation 5-17
PFD-Related Settings 5-19
Other ADAHRS Calibrations 5-21
Performing Pitot/Static Checks 5-22

6. SV-MAP-270 Navigation Mapping License Purchase and Setup 6-1

License Information 6-1
Databases 6-3
Viewing Information about Installed Databases 6-3
Terrain Database 6-6
Aviation/Obstacle Databases 6-7
US SkyView Pilots – Stadium TFR Database 6-8

Charts and Airport Diagrams 6-9
Loading Databases 6-10
Removing Databases 6-10

7. SV-EMS-220/221 Installation and Configuration 7-1

Physical Installation 7-3
SkyView Network Connection 7-5
SkyView EMS Sensor Definition and Configuration Files 7-5
Engine Sensor and Transducer Planning 7-5
Example Engine Sensor and Transducer Installations 7-19
Lycoming/Continental 4-cylinder Carbureted 7-20
Lycoming/Continental 4-cylinder Fuel Injected 7-22
Lycoming/Continental 6-cylinder Carbureted 7-24
Lycoming/Continental 6-cylinder Fuel Injected 7-26
Jabiru 2200 7-28
Jabiru 3300 7-30
Rotax 912 ULS Carbureted 7-32
Rotax 912 iS (Electronic Control Unit) 7-34
ULPower (Electronic Control Unit) 7-38
Example 9-cylinder Radial 7-39
Dual Engine Support Using Dual SV-EMS-220/221s and Two SkyView Classic Displays 7-43
Engine Sensor and Transducer Installation 7-44
Engine Sensor Accuracy and Grounding 7-44
Tools and Equipment Required 7-45
Voltmeter Inputs 7-45
Exhaust Gas Temperature (EGT) Sensors 7-45
Cylinder Head Temperature (CHT) Sensors 7-47
Tachometer 7-48
Manifold Pressure Sensor 7-50
Oil Pressure Sensors 7-51
Oil Temperature Sensors 7-55
Fuel Pressure Sensors 7-57
Fuel Flow Transducer 7-60
Fuel Level Sensor 7-63
Ammeter Shunt 7-65
Carburetor Temperature Sensor 7-69
Rotax CHT Sensors 7-69
Trim and Flaps Position Potentiometers 7-70
Coolant & Other Fluid Pressure Sensors 7-71
Coolant Temperature Sensor 7-74
General Purpose Temperature Sensor 7-74
Rotax 914 Air Box Temperature 7-74
Contacts 7-75
General Purpose Thermocouple 7-76
External EMS Warning Light 7-77
Engine Information 7-77
EMS Sensor Definitions, Mapping, and Settings 7-79
EMS Sensor Definitions 7-79
EMS Sensor Input Mapping 7-80
EMS Sensor Settings 7-81
EMS Screen Layout Editor 7-90
EMS Sensor Calibration 7-92
SkyView HDX ENGINE BOTTOM BAND 7-93

8. SV-GPS-250/2020 GPS Receiver Installation and Configuration 8-1

WAAS Data Reception 8-2
Use of the SV-GPS-2020 outside the US 8-3
Considerations for converting an SV-GPS-250 to an SV-GPS-2020 in Special Light Sport Aircraft (S-LSAs) 8-3
Physical Installation 8-4
Considerations for installing an SV-GPS-2020 in an aircraft with an installed SV-GPS-250 8-6
Serial Data Connection 8-7
Configuration – SV-GPS-2020 only, Serial Port 5 8-10
Configuration – SV-GPS-2020 (Serial Port 5) and SV-GPS-250 (Serial Port 4) 8-10
Updating SV-GPS-2020 Software 8-11
Testing / troubleshooting installation of the SV-GPS-250 and/or SV-GPS-2020 8-12
Part 1 – Basic Serial Port Functionality 8-12
Part 2 – GPS Receive Performance 8-13
(US only) Additional configuration required for SDA/SIL=1 8-16
Additional Configuration Required for Compliance with FAA 2020 ADS-B Out Mandate 8-16

9. SV-BAT-320 Backup Battery Installation 9-1

Physical Installation 9-2
SV-BAT-320 Location 9-2
Electrical Connection 9-3
Charging the SV-BAT-320 9-3
SV-BAT-320 is Automatically Charged in Flight 9-4
Charging the SV-BAT-320 on Ground or During Aircraft Construction 9-4
Battery Status Icon 9-5
Detailed Battery Status Check 9-5
Initial SV-BAT-320 Test 9-6
In the Event of Initial SV-BAT-320 Test Failure 9-7
SV-BAT-320 Specifications 9-8
Returning an SV-BAT-320 to Dynon Avionics for Exchange (Warranty Replacement) 9-8

10. AP Servo Installation, Configuration, and Calibration 10-1

Dynon Avionics Autopilot Servo Models 10-3
Compass Calibration Requirement 10-3
Additional Resources 10-3
Servo Mechanical Installation 10-4
Autopilot Servo Calibration and Test Procedures 10-16
Autopilot Servo Initial Setup 10-17
Autopilot In-Flight Tuning Procedures 10-24

11. SV-XPNDR-261/262 Installation and Configuration 11-1

Physical Installation 11-3
Electrical Connections 11-5
Antenna Installation 11-12
Transponder-Related SkyView Display Settings 11-16
(US only) Configuration required for SDA/SIL=1 for continued reception of ADS-B Traffic (early 2016) 11-24
SkyView Systems with an SV-GPS-250 as primary GPS 11-24
(US-Only) Equipping for compliance with FAA 2020 ADS-B Out Mandate 11-26
Installation of Dynon Avionics SV-GPS-2020 for compliance with FAA 2020 ADS-B Out mandate 11-27
SV-XPNDR-261/262 Software Updates 11-30
SV-XPNDR-261/262 Software Update SW02.09 11-35
SV-XPNDR-261/262 Software Update SW02.09 11-35
SV-XPNDR-261/262 Software Update SW02.11 Quick Decision Points 11-35
Deprecated SV-XPNDR-261/262 Software Update Instructions and notes 11-37

SkyView Software v12.2 – v13.0.3 SV-XPNDR-261/262 Software SW02.06 Update 11-38
SV-XPNDR-261/262 Software Version (SW) v2.02/v2.04/v2.06 Labeling Requirements (US Registered / Operated Aircraft Only) 11-39
SkyView Software v14.0 – v14.1 SV-XPNDR-261/262 Software Update SW02.08 11-40
SV-XPNDR-261/262 Software Update SW02.08 Quick Decision Points 11-40
SV-XPNDR-261/262 Post Installation Checks 11-41
Transponder Warnings (Transponder Self Diagnostics) 11-42
Performing Transponder Checks 11-43
Dynon Avionics SV-GPS-250 and SV-GPS-2020 Compliance Statements 11-44

12. SV-ARINC-429 Installation and Configuration 12-1

Physical Installation 12-1
SkyView Network Connection 12-2
ARINC-429 Device Connection 12-2
SV-ARINC-429 Related Settings 12-11

13. Vertical Power VP-X Integration and Configuration 13-1

VP-X Physical, Electrical Installation and Configuration 13-1
Serial Port Connection 13-2
License Information 13-3
VP-X SkyView Display Settings 13-4
Post Installation Checks 13-5

14. SV-ADSB-470/472 Installation and Configuration 14-1

Upgrading from SV-ADSB-470 to SV-ADSB-472 14-2
Physical Installation 14-2
Electrical Installation 14-5
Antenna Selection and Installation 14-8
SV-ADSB-470 Related SkyView Display Settings 14-10
SV-ADSB-472 Related SkyView Display Settings 14-11
Post Installation Checks 14-11
SV-ADSB-472 Software Updates 14-12

15. Accessory Installation and Configuration 15-1

SkyView System Angle of Attack Pitot Probe 15-1
Encoder Serial-to-Gray Code Converter 15-5
Capacitance to Voltage Converter for Van's Capacitive Plates 15-8
SkyView Video Input Adapter 15-9
SkyView Wi-Fi Adapter 15-13
Advanced Flight Systems (AFS) ADVANCED Control Module (ACM) 15-16
SV-BUTTON-LEVEL 15-17
Pitot/Static/AOA Pneumatic Installation Kit 15-21
Recommended Tools & Installation Accessories 15-24
Installation 15-24
Panel Module Faceplate Blank 15-27
SV-KNOB-DIMMER 15-28

16. SV-COM-C25 Installation and Configuration 16-1

Physical Installation: SV-COM-PANEL 16-2
Electrical Installation 16-6
Power Input 16-6
Audio Signal Grounding 16-6
Audio Shielding 16-6

SkyView Network Connectors 16-6
Electrical Connections 16-6
Antenna Installation 16-13
SkyView System Settings for SV-COM-C25 16-14
Post Installation Checks 16-16
Continued Airworthiness and Maintenance 16-17

17. SV-COM-X25 and SV-COM-X83 Installation and Configuration 17-1

Considerations for SV-COM-X83 17-2
Physical Installation: SV-COM-PANEL 17-2
Physical Installation: SV-COM-T25 and SV-COM-T8 17-4
Electrical Installation 17-7
Power Input 17-7
Audio Signal Grounding 17-7
Audio Shielding 17-7
SkyView Network Connectors 17-7
Electrical Connections 17-8
Antenna Installation 17-16
SkyView System Settings for SV-COM-X25 and SV-COM-X83 17-19
Post Installation Checks 17-20
Continued Airworthiness and Maintenance 17-20

18. SV-AP-PANEL Installation and Configuration 18-1

Physical Installation 18-3
Electrical Installation 18-4
Autopilot Auto-trim 18-9
In-Flight Auto-Trim Tuning 18-9
Post Installation Checks 18-10

19. SV-KNOB-PANEL Installation 19-1

Physical Installation 19-2
Electrical Installation 19-3
Post Installation Checks 19-3

20. SV-MAG-236 Installation and Configuration 20-1

Physical Installation 20-2
Optional SV-OAT-340 Connected to SV-MAG-236 20-4
SkyView Network Connection 20-1
Compass Calibration 20-1
On-ground Compass Calibration Procedure: 20-2
In-flight Compass Calibration Procedure: 20-3
Restoring Use of the SV-ADAHRS-200/201 Internal Magnetometer 20-5

21. Appendix A: Maintenance and Troubleshooting 21-1

Cleaning a SkyView Display 21-1
Saving a Screenshot of a Specific Screen 21-2
Savings a Settings File (Configuration of your SkyView system) 21-2
Saving a Dynon Diagnostic File 21-2
SkyView Displays Error: SYS EVENT 5: SEE SETUP 21-3
Returning SkyView Components to Service after Repair 21-3
In a Multi-display SkyView System, Continuing to Fly with a Missing Display 21-6
Operational Status 21-7
Instructions for Continued Airworthiness 21-9

Annual SV-BAT-320 Test 21-10
Troubleshooting 21-12

22. Appendix B: Specifications 22-1

SkyView / Dynon Avionics Minor Equipment Weights 22-1
SkyView Compatible Engine Sensors (sold by Dynon Avionics) 22-2
SV-BAT-320 Specifications 22-3
SV-XPNDR-261 Specifications 22-4
SV-XPNDR-262 Specifications 22-5
SV-XPNDR-261/262 ADS-B Information 22-8
SV-COM-C25 Technical Specifications 22-10
SV-COM-X25 (TY91LA VHF Radio Unit) Technical Specifications 22-11
SV-COM-X83 (TY91L VHF Radio Unit) Technical Specifications 22-12
SV-GPS-250 Specifications 22-13
SV-GPS-2020 Specifications 22-14

23. Appendix C: Wiring and Electrical Connections 23-1

Wire Gauge 23-1
Grounding 23-1
DSUB Crimp Contacts and Tools 23-2
Non-Dynon Avionics Wire Harness Considerations 23-2
SkyView Equipment Electrical Connections 23-4
SkyView Equipment Electrical Connector Pinout Tables 23-6
Servo Pinout (SV-NET-SERVO) 23-6
SkyView Display D37 Pinout (SV-HARNESS-D37) 23-7
SkyView D37M Block Diagram 23-8
SV-EMS-220/221 Pinouts (EMS Harnesses) 23-11
SV-ARINC-429 Pinout 23-14
SV-XPNDR-261/262 Pinout (SV-HARNESS-XPNDR) 23-16
SV-AP-PANEL Pinout (D15M connector) 23-18
SV-COM-PANEL Pinout (D15M) 23-19
SV-COM-425 Pinout 23-20
SV-COM-T25/T8 Pinout 23-21

24. Appendix D: SV-EMS-220/221 Sensor Input Mapping Worksheet 24-1

25. Appendix E: Serial Data Output 25-1

Serial Port 25-1
WiFi and Ethernet 25-2
DYNON ADAHRS Serial Data Format 25-3
DYNON SYSTEM Serial Data Format 25-5
DYNON EMS Serial Data Format 25-8
DYNON ADAHRS / SYSTEM / EMS Serial Data Output Combinations 25-12
NMEA OUT Serial Data Formats 25-13

26. Appendix F: User Data Logs 26-1

User Data Log 26-1
Recent Flight Data Log 26-2
Alert Data Log 26-2
History Data Log 26-3
Data Logging Recording Options 26-3
Exporting Data Logs 26-3

27. Appendix G: Kavlico Pressure Sensor Part Numbers 27-1

28. Appendix H: Sensor Debug Data **28-1**

29. Appendix I: SkyView System Installation Guide Revision History **29-1**

30. Appendix J: Checklists **30-1**

Saving Your Checklist with “UTF-8 Character Encoding” 30-2
Example Checklist 30-4
Example Checklist Formatting Notes: 30-5
Excel Checklist Generation Tool 30-6
Loading a Checklist 30-6
Displaying Your Checklist on your SkyView Display 30-9

31. Appendix K: Switches, etc. External to SkyView Units **31-1**

1. Introduction

It is the installer's responsibility to conform to industry standards as applicable.

This guide provides information about the physical (mechanical), electrical, and pneumatic installation and configuration of the following SkyView major system components:

- Advanced Flight Systems (AFS) ADVANCED Control Module (included as part of an ADVANCED Quick Panel System)*
- Angle-of-Attack (AOA) / Pitot Probe (details specific to the SkyView system)
- Encoder Serial-to-Gray Code Converter
- Capacitance to Voltage Converter
- Engine and environmental sensors purchased from Dynon Avionics (and selected other sensors)
- SkyView Video Input Adapter
- SkyView Wi-Fi Adapter
- SV32 Autopilot servo (all variations, generic installation details)
- SV42 Autopilot servo (all variations, generic installation details)
- SV52 Autopilot servo (all variations, generic installation details)
- SV-AP-PANEL Expert Autopilot Control Panel / Trim Controller**
- SV-ADAHRS-200 ADAHRS Module
- SV-ADAHRS-201 ADAHRS Module
- SV-ADSB-470/472 ADS-B Receiver Module*
- SV-ADSB-472 Dual Band ADS-B Receiver Module*
- SV-ARINC-429 ARINC 429 Interface Module*
- SV-BAT-320 Backup Battery
- SV-COM-C25, SV-COM-X25, and SV-COM-X83 COM Radios
- SV-D600 SkyView SE Display
- SV-D700 SkyView Classic Display
- SV-D900 SkyView SE Display
- SV-D1000 SkyView Classic Display
- SV-D1000T SkyView Classic Display
- SV-HDX800 SkyView HDX Display
- SV-HDX1100 SkyView HDX Display
- SV-EMS-220 Engine Monitoring Module
- SV-EMS-221 Engine Monitoring Module
- SV-GPS-250 GPS Receiver Module
- SV-GPS-2020 GPS Receiver Module
- SV-KNOB-PANEL Knob Control Panel
- SV-MAG-236 Remote Magnetometer
- SV-XPNDR-261 Transponder
- SV-XPNDR-262 Transponder

* Not applicable to a SkyView SE system
** SV-AP-PANEL buttons not applicable to a SkyView SE system (trim control subsystem does function in a SkyView SE system.)

The following (optional) units have their own Installation and/or Operating manuals, also available at http://docs.dynonavionics.com:

- Dynon Avionics AOA/Pitot Probes
- SV-INTERCOM-2S
- SV32, SV42, and SV52 (all variants) installation kits for specific aircraft

This guide deals with setting up installation-dependent Software options. Because you may not have purchased all of the components mentioned above, you need only read through the relevant sections of this guide

When a SkyView system is connected to products not manufactured or provided by Dynon Avionics (such as NAV radios and GPS receivers), it is often necessary to refer to *those product's technical / installation manuals* to configure *their* settings and *their* wiring to be compatible with your SkyView system. While this guide provides some information about some popular products not manufactured by Dynon Avionics, the information provided in this guide is not comprehensive. Thus, for any third-party products that you intend to connect to your SkyView system, we recommend that the installer obtain the full technical / installation manuals available for reference.

If you are converting to a SkyView or SkyView SE system from an earlier Dynon Avionics D10/D100 series system, we have written the **D10/D100 Series to SkyView Conversion Guide**, which details the changes required to convert between the two product families. It is available as a downloadable PDF document at http://docs.dynonavionics.com.

Warning

Dynon Avionics' products incorporate a variety of precise, sensitive electronics. SkyView products do not contain any field/user-serviceable parts such as fuses. Units found to have been taken apart may not be eligible for repair under warranty. Additionally, once a Dynon Avionics unit has been opened, it is not considered airworthy and must be serviced at the factory.

Dynon Avionics Product Registration

Please take a moment to register your Dynon Avionics SkyView Classic / SkyView SE / SkyView HDX system at http://register.dynonavionics.com. Registering your product with Dynon Avionics ensures that your contact information is up-to-date. This helps verify product ownership, can expedite warranty claims, and allows us to notify you in the event a service bulletin is published for your product. You can also optionally sign up to receive other Dynon Avionics news and product announcements. Dynon Avionics will not share your contact information with third parties or send you announcements without your explicit consent.

About this Guide

This guide – the SkyView Classic / SkyView SE / SkyView HDX System Installation Guide (hereafter, "this guide") contains information for the installation and initial / basic configuration of the SkyView Classic, SkyView SE, and SkyView HDX Systems. Separate guides – the ***SkyView Pilot's User Guide***, ***SkyView SE Pilot's User Guide***, and ***SkyView HDX Pilot's User Guide*** explain the use, configuration, and flying the respective SkyView systems that are not considered part of the installation.

This guide is revised, at a minimum, several times per year, usually coinciding with the release of a new version of SkyView Software, or introduction of new SkyView-related products from Dynon Avionics or partner companies.

Printing This Guide

To reduce waste and confusion resulting from outdated information in print, Dynon Avionics no longer provides this guide in printed form. The latest, most up-to-date, most complete version of this guide (and all Dynon Avionics documentation, including the various Pilot's User Guides) is always available at http://docs.dynonavionics.com. We recommend that you download the most recent version and print out sections as necessary for your build. If you prefer to print out the entire guide, rather than printing it out on a home printer (typically, with relatively expensive inkjet printing) we recommend that you have this take the PDF file of this guide to be printed at a large office supply retailer that provides printing services. The statement on the cover of this guide: **Permission to print this manual is granted to third parties.** should be sufficient permission to do so.

It is also handy to have the electronic version on your tablet computer as reference as you can perform keyword searches, and the electronic version includes figures and diagrams that contain important color information. We have found that the free "iBooks" application that can be installed on Apple iPad tablet computers can import this guide's PDF file for easy reference.

In the electronic (.PDF) version of this guide, page and section references in the Table of Contents and elsewhere act as hyperlinks taking you to the relevant location in the guide.

This icon denotes information that merits special attention.

This icon denotes a helpful installation tip.

If your aircraft was built using components not provided by Dynon Avionics (such as harnesses), some information provided in this guide may not be applicable. For example, some manufacturers prefer to build harnesses that do not adhere to the wire color codes of harnesses manufactured by Dynon Avionics. Some configuration menus described in this guide may not be accessible as a manufacturer may have restricted access to certain menus.

Semantics of “Firmware” vs “Software”

In a typical personal computer, the “Firmware” is the (seldom-changed) low-level software that boots up the computer and then proceeds to loads the “operating system (OS)” (typically Windows, or Mac OS, or Linux), which then loads the “application software (apps)”. In a SkyView system, because the “Firmware”, “OS”, and “apps” functions are embedded into a single unit with a single function, the “Firmware”, “OS”, and “software” distinctions aren’t relevant to the builder or pilot. So, for clarity, in this guide, for clarity, the term “Software” is used (most of the time) as an encompassing term for “Firmware”, “OS”, and “app” functions.

SkyView Classic, SkyView Touch, SkyView SE, and SkyView HDX

SkyView SE is a streamlined, simplified edition of SkyView. Although the two editions are within the same family of products, the two editions cannot interoperate. For example, you cannot install a SkyView SE display (SV-D600 or SV-D900) into an existing SkyView (non-SE) system and vice versa. Most notably, SkyView SE does not support the MAP function of SkyView, Synthetic Vision (SynVis) or the Expert AP mode. The following SkyView features / units are not supported in SkyView SE:

- Alternative languages (US English only)
- Charts (not supplied by Dynon Avionics)
- SV-ADSB-470/472/472
- SV-AP-PANEL (buttons; Trim Control Subsystem is supported in SkyView SE)
- SV-ARINC-429
- SV-D1000T (SkyView Touch)
- SV-EMS-220 (a second unit, for supporting dual engines)
- Vertical Power VP-X (not supplied by Dynon Avionics)
- Video Input Adapter
- Wi-Fi Adapter

SkyView HDX, the newest product in the SkyView family, is a successor to SkyView Classic, including SkyView Touch. Just as many features of SkyView Classic are not supported in SkyView SE, many features in SkyView HDX are not supported in the older SkyView Classic. The “feature progression” of the three products are:

SkyView SE → SkyView Classic, Touch → SkyView HDX

The installation details for all three products families are largely the same, thus this manual (originally written for SkyView [now SkyView Classic and Touch]) has been updated to incorporate the details of SkyView SE and SkyView HDX installation. The individual sections are noted if that product is not supported in SkyView SE or SkyView Classic.

Special Light Sport Aircraft (S-LSA) Considerations with SkyView

Modifications / configuration changes to S-SLA aircraft generally require a Letter of Authorization (LOA) from the aircraft manufacturer or authorized dealer. This includes modifications as minor as adding a new SkyView component, such as a panel unit, or, in some

cases, updating SkyView's Software. If you have an S-LSA, it is recommended that you consult your aircraft's Pilot Operating Handbook and aircraft's Maintenance Manual. These will guide you in what modifications, including whether Software updates, are permitted. Please consult your authorized dealer, or your manufacturer, if you have questions.

Some aircraft manufacturers, notably Van's Aircraft (the RV-12), and Flight Design, provide customized versions of SkyView Software in "packages". Such customized packages provide Software updates and settings specific to those aircraft, and is available from the aircraft manufacturer's website (not Dynon Avionics). Some manufacturers choose to "lock" certain SkyView settings, including not being able to update a SkyView system using "generic" SkyView Software. Such restrictions are at the discretion of the aircraft manufacturer, and Dynon Avionics cannot "override" such restrictions.

SkyView documentation, including this guide, generally does not address specific aircraft types, options, and specific SkyView configurations.

Generally, we recommend that you update your SkyView system to the latest available Software as released by Dynon Avionics several times per year, available at http://downloads.dynonavionics.com. This revision of the SkyView System Installation Guide includes features, functions, improvements, and new products coinciding with the Software version stated on the cover page. Updating your system Software ensures that you have access to the latest features, functions, and improvements SkyView has to offer.

Go Fly!

Getting Started

This "getting started" section contains a minimal information that can be used to check out your SkyView system on the bench, or immediately after SkyView has been installed in the plane. This section is not a substitute for reading this entire guide, which provides instructions for wiring and configuring SkyView to the unique requirements of your particular airplane.

1. A SkyView display requires 10-30 VDC. You must connect BOTH of the (long) Red wires to POWER and BOTH of the (long) black wires to Ground. Current for each display can be up to 3.5A @ 12V (add 1.5A if the SV-BAT-320 battery is connected and being charged), so use a big battery or power supply.
2. To power on or power off a SkyView display manually, push and hold Button #1 (the left-most button).
3. Any devices connected to SkyView that do not receive their power fr om the SkyView Network (such as SV-XPNDR-261/262 and Dynon Avionics Autopilot servos) must also be powered ON to communicate with SkyView.
4. To finish the installation of the SV-NET-10CP (10 foot) and longer cables, the diagram you need to insert the pins is SkyView Network in Appendix C: Wiring and Electrical Connections.
5. The EMS 37-pin Main Sensor Harness includes a 9-pin connector that is wired to pins 11 (Orange wire), 12 (Yellow wire), and 30 (Black wire). This connector is used for other Dynon

Avionics products, but is not used in SkyView installations. Thus, the 9-pin connector should be removed to use these wires for connecting sensors to the SV-EMS-220. Remove the connector by cutting the three wires close to the 9-pin connector.

6. SkyView SETUP MENU is accessed by pushing and holding Buttons 7+8 together for 2-3 seconds.
7. Setting the Tail Number is required for before you can configure your SkyView Network (described below): SETUP > AIRCRAFT INFORMATION > TAIL NUMBER. If Tail Number has not yet been issued for your plane, set TAIL NUMBER to something other than DYNON AVIONICS. Note that for US planes, the leading N is a required part of the TAIL NUMBER. TAIL NUMBER should not include dashes (-) or spaces. Examples:
   Correct: N12AB
   Incorrect: N-12AB or N 12AB
8. SkyView displays and modules communicate over a common set of wires – the SkyView Network that terminates at the D9 connectors on the back of your SkyView display(s). Getting all modules and displays "talking" on SkyView Network is done by going to SETUP MENU > SYSTEM SETUP > SKYVIEW NETWORK SETUP > CONFIGURE > (click right one more time). If a module is noted as "requires update", press the UPDATE button. Otherwise, press the FINISH button. Note that you will not see any flight instruments or engine instruments before a network configuration is performed, even if the SV-ADAHRS-200/201 and SV-EMS-220/221 have been wired properly and are connected.
9. Devices that do not utilize SkyView Network are connected via RS-232 serial port connections. Dynon Avionics devices that use RS-232 serial ports include the SV-ADSB-470/472/472, SV-GPS-250/2020, SV-XPNDR-261/262, and various third-party devices. As RS-232 serial devices are not part of the SkyView Network, they will not be seen on the list of devices seen as you configure SkyView Network above. Instead, configuring SkyView to communicate with SV-GPS-250/2020 and SV-XPNDR-261/262 is done via a more manual process in SETUP MENU > SYSTEM SETUP > SERIAL PORT SETUP.
10. If you have installed an SV-GPS-250/2020, its SERIAL IN FUNCTION must be set to POS 1.
11. After you've configured SkyView Network, have properly configured any serial devices, exit SETUP MENU. Your SkyView display should now display EMS, PFD, and MAP (SkyView SE does not include MAP as a feature). Map will not display without a GPS fix (the airplane symbol on the Map page will also flash with "?" if it does not have a GPS fix.
12. Your SkyView System may require various updates such as system Software, databases, and Sensor Definitions. See http://downloads.dynonavionics.com for more details on the updates available for SkyView. If you are a non-US customer, the display of aviation and obstacle data on your SkyView system requires a database purchase from Jeppesen or PocketFMS. Note that Software on each SkyView display must be updated individually.
13. Common issues for setting up SkyView engine monitoring:
    a. The configuration of sensors installed on SkyView at the factory is generic; therefore "Red X's" on the EMS for various sensors are normal until sensor configuration for your particular engine sensor configuration is complete.
    b. The layout of which sensor "widgets" are shown on the screen, sizes, styles, etc. is completely configurable: SETUP > EMS SETUP > SCREEN LAYOUT EDITOR
14. Common issues for setting up SV-XPNDR-261/262:

a. Ensure that there is a valid tail number set (see above)
b. Ensure that a valid HEX CODE is set: SETUP > TRANSPONDER SETUP > TRANSPONDER HEX CODE. A caution message – XPNDR HEX CODE NOT SET will appear if a transponder is configured in SkyView, but the HEX CODE is not set to a valid number.
c. Traffic will not be displayed unless you are in an area covered by an TIS radar site (US only)

15. Common issues for setting up Dynon Avionics Autopilot
    a. Servos must be powered ON
    b. Servos must be recognized on SkyView Network (above)
    c. AIRSPEED LIMITATIONS must be set (at least one must be actively adjusted from the defaults) before the Autopilot can be configured: SETUP > PFD SETUP > AIRSPEED.
    d. AP SERVO CALIBRATION must be performed: SETUP > HARDWARE CALIBRATION > AP SERVO CALIBRATION > CALIBRATION.
    e. After AP SERVO CALIBRATION is successfully completed, AP status will now be displayed on the SkyView display top bar.

2. System Planning

Installers should read and understand this section before proceeding with physical installation. SkyView equipment installed contrary to the requirements outlined in this section may not operate within specifications.

The purpose of this section is to familiarize you with important SkyView system information and concepts including the following:

- SkyView units cannot / should not be mixed
- 9-pin D9F and D9M Connectors are SkyView Network (not RS-232 Serial)
- Operating specifications
- SkyView systems

When SkyView components are used together, they are referred to as a SkyView system. This section also explains what a SkyView system is and how to build one.

SkyView units cannot / should not be mixed

For planning your SkyView system, or upgrades, Dynon Avionics recommends planning / budgeting for installing the same “family” of SkyView displays, not to “mix” displays from different SkyView families.

SkyView SE displays cannot interoperate in a SkyView system that includes SkyView Classic or SkyView HDX displays. For example, if you plan to use a SkyView SE display, your SkyView system should only use SkyView SV-D600 or SkyView SV-900 displays.

SkyView HDX product line will eventually add features and products that are not compatible with SkyView Classic. Thus, Dynon Avionics does not recommend depending on “mixing and match” SkyView Classic and SkyView HDX displays in the same SkyView system. A future version of SkyView Software will remove the ability to interoperate between SkyView Classic and SkyView HDX.

For planning your panel for the first time, or planning to upgrade displays, the displays should be “all SkyView Classic” or “all SkyView HDX” displays.

9-pin D9F and D9M Connectors are SkyView Network (*not* RS-232 Serial)

SkyView displays and SkyView modules use D9M connectors for "SkyView Network" connections between SkyView displays and SkyView modules[1],[2]. This initially causes some confusion because the same type of connector is used for "RS-232 serial" on PCs and other (non-SkyView) devices such as GPS units. The 9-pin SkyView Network connectors on the back of a SkyView display is shown in Figure 1 at right.

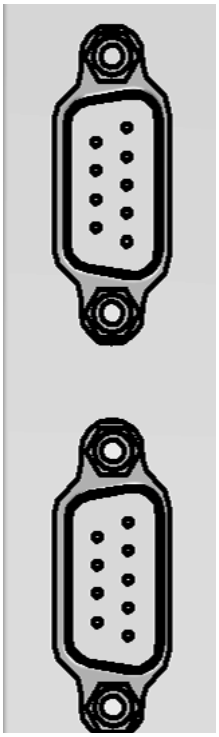

Figure 1
SkyView Display
SkyView Network
Connectors

The specific use of the various pins within the 9-pin SkyView Network connectors in a SkyView system is unique to SkyView. ***It is important to understand that in SkyView, the 9-pin connectors are not electrically compatible with RS-232 serial connections found on PCs and other devices. One critical difference is that in a SkyView Network 9-pin D9F or D9M connector, 3 of the 9 pins provide power, which, if connected to a RS-232 serial device, could damage it, or damage the SkyView display.*** For example, if you wish to connect a GPS unit that has an RS-232 output, it will not work… and may damage SkyView or the GPS… to connect the two units directly by plugging in the GPS' 9-pin connector the 9-pin connectors on the SkyView display.

RS-232 serial devices *can* be connected to a SkyView system; this is done via specific pins / wires of the SV-HARNESS-D37 37-pin connector / harness on the SkyView display. Details of connecting RS-232 serial devices are explained in SkyView Display Installation and Configuration, RS-232 Serial Devices, and Appendix C: Wiring and Electrical Connections, SkyView Display D37 Pinout (SV-HARNESS-D37).

SkyView Network is a "Party Line"

SkyView Network communicates between the displays and modules as a modern, multi-drop (serial BUS) network, similar to an old-fashioned telephone party line. A more modern example of a multi-drop serial network is Ethernet. SkyView Network wiring is electrically common between all SkyView Network devices. In SkyView Network each Pin 1 of the 9-pin SkyView Network connectors and cables are electrically connected to every SkyView Network 9-pin connector Pin 1.

The "physical" method of each connection doesn't matter – electrical connections can be made with splitters, hubs, multiple SkyView Network connectors on the back of a device (both connectors are electrically common), etc. All SkyView Network devices "listen" on the SkyView Network. A SkyView display manages (controls) all communications over SkyView Network. For example, if there are two SV32 servos installed, the SkyView display "talks" to only one SV32 at a time. The SkyView display distinguishes between the two SV32s by their unique (electronic) Serial Number.

[1] The SV-ADSB-470/472 ADS-B receiver uses a D9F connector *that is not compatible with SkyView Network*; see the section SV-ADSB-470/472 Installation and Configuration for details.
[2] Dynon Avionics AP servos (wired with the SV-NET-SERVO kit) use a D9F and D9M connectors (at the servo) *that is not compatible with SkyView Network*; see the section AP Servo Installation, Configuration, and Calibration for details.

If there is more than one SkyView display, for controlling SkyView Network communications, one display is automatically elected as “Master”, and the other display has a “Standby” role. If the “Master” display fails, the “Standby” display automatically becomes “Master” (failover) and begins managing SkyView Network communications.

External Switches and Indicators

Some SkyView units provide inputs or outputs for switches and indicators that are installed external to the SkyView unit. Some of these are required, others provide optional functionality. Appendix K: Switches, etc. External to SkyView Units provides a comprehensive listing of all external switches or indicators for reference in planning a SkyView system panel, stick grip, hat switches, etc.

SkyView Display Resolution

SkyView displays feature high resolution displays with non-reflective screens that are viewable in direct sunlight.

SkyView Display	Resolution
SV-D600	800 x 480 pixels
SV-D700	
SV-D900	1024 x 600 pixels
SV-D1000	
SV-D1000T	
SV-HDX800	1280 x 800 pixels
SV-HDX1100	

Table 2 - SkyView Displays Resolution

SkyView System Maximum Number of Displays

A SkyView Classic system can include as many as three SkyView Classic and SkyView Touch displays in any combination of SV-D700s, SV-D1000s, and SV-D1000Ts.

A SkyView SE system can include as many as three SkyView SE displays in any combination of SV-D600s and SV-D900s.

A SkyView HDX system can include as many as three SkyView displays in any combination of SV-HDX800s and SV-HDX1100s.

Power Specifications

Table 3 contains SkyView displays and devices that are powered by SkyView displays. 5A circuit protection is recommended for SkyView displays in common configurations; 5A is the smallest circuit breaker that is commonly available in certified versions.

SkyView Displays: **No SV-BAT-320 (see below)** **No SkyView Network modules (see below)** **No SV-GPS-250** **No USB devices** **Display brightness at maximum**	**Current requirement @ 12V DC**	**Current requirement @ 24V DC**	**Circuit Protection Recommendation**
SV-D600 all S/N	2.10A	1.00A	5A
SV-D700 S/N below 4000	2.60A	1.30A	5A
SV-D700 S/N above 4000	2.10A	1.00A	5A
SV-D900 all S/N	2.00A	1.00A	5A
SV-D1000 S/N below 6000	2.70A	1.40A	5A
SV-D1000 S/N above 6000	2.00A	1.00A	5A
SV-D1000T all S/N	2.40A	1.20A	5A
SV-HDX800 all S/N	2.10A	1.00A	5A
SV-HDX1100 all S/N	2.40A	1.20A	5A
Devices powered from SkyView Displays These devices are directly connected to an individual SkyView display and are powered by the display. Add the current consumption of these devices to the current consumption of the SkyView display they are connected to. This will allow you to calculate the total current that each SkyView display requires.			
SV-BAT-320 (while charging)	1.00A	0.50A	N/A
SV-GPS-250	0.10A	0.10A	N/A
SV-GPS-2020	0.10A	0.05A	N/A
Video Adapter for SkyView (USB)	0.15A	0.08A	N/A
SkyView Wi-Fi Adapter (USB)	0.10A	0.05A	N/A
Devices powered via SkyView Network These devices are connected to SkyView Network, which is powered by the SkyView display(s). If you have two or three displays, the current requirements of these devices are shared equally between the displays. If you have one display, add 100% of a SkyView Network device's current to the display's current requirement. If you have two displays, add 50% of SkyView Network device's current to each display's current requirement. If you have three displays, add 33% of SkyView Network device's current to each display's current requirement.			
SV-ADAHRS-200/201	0.15A	0.08A	N/A
SV-AP-PANEL (not including trim motor loads)	0.05A	0.03A	N/A
SV-ARINC-429	0.10A	0.05A	N/A
SV-EMS-220 (maximum number of sensors)	0.11A	0.06A	N/A
SV-KNOB-PANEL	0.07A	0.04A	N/A
SV-MAG-236	0.15A	0.08A	N/A

Table 3 – Power Specifications for SkyView Displays, Units Powered by SkyView Displays

Example, a SV-D1000T @ 12V with:
1 – SV-BAT-320 (1.00A)
1 - SV-GPS-2020 (0.10A)
1 - SV-ADAHRS-200 (0.15A)
1 - SV-EMS-220 (0.11A)
will require 3.76A when charging the battery, 2.76A when the battery is fully charged.

Table 4 contains power specifications for SkyView units that are powered from aircraft power (not powered by SkyView Network). The circuit protection recommendations are suitable for most installations and assume that you are using Dynon Avionics harnesses and/or are following the wiring advice in this Installation Guide. It may be possible to use different sized circuit protection if the protective device has suitable load overhead for the device(s) connected to it. It is important that circuit protection devices be appropriately sized to protect the *wiring* connected to them. 5A circuit protection is recommend in most cases because that is the smallest circuit breaker that is commonly available in certified versions, and Dynon Avionics wiring harnesses specify wire of at least 22 AWG.

Unit	Current requirement @ 12V DC	Current requirement @ 24V DC	Circuit Protection Recommendation
SV-ADSB-470	0.20A	0.10A	5A
SV-ADSB-472	0.1A	0.05A	5A
SV-AP-PANEL (Trim motor control section)	Actual current requirement dependent on the trim motor chosen	Not Applicable 12V only	5A
SV-COM-C25 - Receive	0.20A	0.10A	5A
SV-COM-C25 – Transmit	3.00A	1.50A	
SV-COM-X25/X83 – Receive	0.20A*	0.20A*	5A
SV-COM-X25/X83 – Transmit	2.00A*	2.00A*	
SV-INTERCOM-2S	0.10A*	0.10A*	5A (Or add to another circuit)
SV-XPNDR-261/262	0.40A	0.20A	5A
Servos (All) – Not Engaged	0.13A	0.07A	5A
SV32 (all variants) Moving @ 100% torque	1.30A	0.70A	
SV42 (all variants) Moving @ 100% torque	2.00A	1.00A	
SV52 (all variants) Moving @ 100% torque	2.80A	1.40A	
Heated AOA / Pitot Probe @ Maximum Heat	10.00A	Not Applicable 12V only	10A
Serial to Gray Code Converter Module	0.01A*	0.01A*	5A (or add to another circuit)

* Same current @12V and @24V – does not incorporate a switching power supply.

Table 4 – Power Specifications for SkyView Units Powered by Aircraft Power

Major Unit Physical Specifications

Table 5 contains physical specifications of major units. Note that dimensions listed in this table are approximate—see the installation sections of each unit for installation drawings with precise dimensions.

For physical specifications of minor units such as sensors, see Appendix B: Specifications, Table 100 – SkyView Minor Equipment Weights.

Unit	Dimensions	Weight
SV32	2.47” W x 4.20” H x 3.98” D (63mm W x 107mm H x 101mm D)	2.00 lb. (0.90 kg)
SV42	2.47” W x 5.13” H x 3.98” D (63mm W x 130mm H x 101mm D)	3.00 lb. (1.40 kg)
SV52	2.47” W x 6.05” H x 3.98” D (63mm W x 154mm H x 101mm D)	4.00 lb. (1.80 kg)
SV-ADAHRS-200/201	4.71” W x 1.22” H x 2.61” D (120mm W x 31mm H x 66mm D)	0.50 lb. (0.20 kg)
SV-ADSB-470	7.00” W x 1.19” H x 4.63” D (177.8mm W x 30.1mm H x 117.6 D)	0.80 lb. (0.36 kg)
SV-ADSB-472	4.10” W x 0.97” H x 2.79” D (104.2mm W x 24.7mm H x 70.8 D)	0.3 lb. (0.12 kg)
SV-AP-PANEL	3.53” x 1.80” x 1.27” D (89.7mm x 45.7mm H x 32.4mm D)	0.30 lb. (0.15 kg)
SV-ARINC-429	4.75” W x 1.09” H x 2.61” D (121mm W x 28mm H x 66mm D)	0.40 lb. (0.18 kg)
SV-BAT-320	3.30” W x 2.10” H x 3.90” D (84mm W x 53mm H x 99mm D)	0.80 lb. (0.40 kg)
SV-COM-425	7.34” x 2.38” x 1.51” (186.6mm x 60.45mm x 38.23mm)	0.75 lb. (0.34 kg)
SV-COM-PANEL	3.53” x 1.80” x 1.27” D (89.7mm x 45.7mm H x 32.4mm D)	0.38 lb. (0.17 kg)
SV-COM-T25/T8 (w/mounting tray)	2.5” W x 1.9”H x 6.3” D (66mm W x 48mm H x 160mm D)	0.77 lb. (0.35 kg)
SV-D600/D700	7.64” W x 5.51” H x 2.14” D (194mm W x 140mm H x 54mm D)	2.40 lb. (1.10 kg)
SV-D1000 (through S/N 8082)	10.32” W x 7.06” H x 2.14” D (262mm W x 179mm H x 54mm D)	3.00 lb. (1.40 kg)
SV-D900 SV-D1000 (S/N 8083+) SV-D1000T	10.32” W x 7.06” H x 2.33” D (262mm W x 179mm H x 59mm D)	3.30 lb. (1.50 kg)
SV-EMS-220/221	6.35” W x 1.09” H x 2.99” D (161mm W x 28mm H x 76mm D)	0.63 lb. (0.29 kg)
SV-GPS-250	2.19” W x 0.75” H x 3.44” D (56mm W x 19mm H x 87mm D)	0.44 lb. (0.20 kg)
SV-GPS-2020		0.47 lb. (0.21 kg)

Unit	Dimensions	Weight
SV-HDX800	7.64” W 5.59” H x 3.21” D (194mm W x 142mm H x 82mm D)	2.75 lb. (1.25 kg)
SV-HDX1100	10.31” W x 7.1” H x 3.1” D (262mm W x 180mm x 79mm D)	3.35 lb. (1.52 kg)
SV-KNOB-PANEL	3.53” x 1.80” x 1.27” D (89.7mm x 45.7mm H x 32.4mm D)	0.40 lb. (0.18 kg)
SV-MAG-236	4.71” W x 1.22” H x 2.61” D (120mm W x 31mm H x 66mm D) (not including cable - 18” (457mm)	0.46 lb. (0.21 kg)
SV-XPNDR-261/262 (w/mounting tray)	2.5” W x 1.9”H x 6.3” D (66mm W x 48mm H x 160mm D)	0.77 lb. (0.35 kg)

Table 5 – SkyView System Component Physical Specifications

Temperature Specifications

Table 6 contains environmental specifications for major SkyView units.

Environmental Specifications	Storage Temperature	Operating Temperature
SV32 (all variants) SV42 (all variants) SV52 (all variants)	-22° F to 167° F (-30° C to 75° C)	-22° F to 140° F (-30° C to 60° C)
SV-ADAHRS-200 SV-ADAHRS-201	-40° F to 158° F (-40° C to 70° C)	-22° F to 140° F (-30° C to 60° C)
SV-ADSB-470/472	-40° F to 158° F (-40° C to 70° C)	-22° F to 140° F (-30° C to +60° C)
SV-AP-PANEL	-40° F to 158° F (-40° C to 70° C)	-22° F to 140° F (-30° C to 60° C)
SV-ARINC-429	-40° F to 158° F (-40° C to 70° C)	-22° F to 140° F (-30° C to +60° C)
SV-BAT-320	-4° F to 140° F (-20° C to 60 °C)	-4° F to 140° F (-20° C to 60° C)
SV-COM-C25	-40° F to 158° F (-40° C to 70° C)	-22° F to 140° F (-30° C to 60° C)
SV-COM-X25/X83	-67° F to 185° F (-55° C to 85° C)	-4° F to 158° F (-20° C to 70° C)
SV-D600 SV-D700 SV-D900 SV-D1000 SV-D1000T SV-HDX800 SV-HDX1100	-40° F to 158° F (-40° C to 70° C)	-22° F to 140° F (-30° C to 60° C)

Environmental Specifications	Storage Temperature	Operating Temperature
SV-EMS-220 SV-EMS-221	-40° F to 158° F (-40° C to 70° C)	-22° F to 140° F (-30° C to 60° C)
SV-GPS-250 SV-GPS-2020	-40° F to 158° F (-40° C to 70° C)	-40° F to 140° F -40° C to 60° C
SV-KNOB-PANEL	-40° F to 158° F (-40° C to 70° C)	-22° F to 140° F (-30° C to 60° C)
SV-MAG-236	-40° F to 158° F (-40° C to 70° C)	-22° F to 140° F (-30° C to 60° C)
SV-XPNDR-261 SV-XPNDR-262	-67° F to 185° F (-55° C to 85° C)	-4° F to 158° F (-20° C to 70° C)

Table 6 – SkyView System Component Environmental Specifications

General System Installation Tips

Aircraft construction involves a variety of processes that create debris that can damage Dynon Avionics components. Metalwork, in particular, will produce metallic shavings and dust that may damage or destroy the electronics in Dynon Avionics products if they are contaminated with this debris. Care should be taken to ensure that Dynon Avionics products are kept away from aircraft construction debris. Damage caused by the introduction of outside particulates into the interior of a Dynon Avionics unit will not be repaired under warranty.

Do not physically modify SkyView displays or SkyView modules in any way that is not specified in this manual. Damage caused to Dynon Avionics products due to physical modifications will not be repaired under warranty.

SkyView System Can Be On During Engine Start

All Dynon Avionics units in a SkyView system incorporate robust power protection that allows them to be powered on during engine start for full engine monitoring. SkyView displays require a minimum of 10V, and during engine start, it's common for the electrical system to temporarily drop below 10V. If an SV-BAT-320 Backup Battery is not installed, SkyView may shut off / reboot. If you wish to monitor your engine prior to engine start, an SV-BAT-320 should be installed so that the SkyView display can switch to the SV-BAT-320 when its power inputs are not receiving at least 10V. The SkyView display will switch from SV-BAT-320 to aircraft power when its power inputs receive voltage above 10V.

Installing SkyView in an IFR-Equipped Aircraft

SkyView SE does not integrate with any IFR navigation sources, and excludes features and components commonly used in an aircraft equipped for IFR flight.

If you are equipping an aircraft that is capable of being flown in IFR/IMC conditions, Dynon Avionics makes the following recommendations:

The entirety of the instrument panel and supporting avionics systems and instrumentation should be designed so that the display of information essential for continued safe flight and landing will remain available to the pilot after any single failure or probable combination of failures. In other words, a usable "partial-panel" of primary flight instruments should be preserved in the event of the failure of a SkyView display, systems that support it, or other instruments in the aircraft.

This level of redundancy can be obtained in different ways. For example, one could utilize multiple SkyView displays (with SV-BAT-320 backup batteries attached) including multiple ADAHRS units connected to protect against the failure of any single display, ADAHRS, or the electrical system. Flight instrument redundancy could also be preserved by using other separate and independent systems such as the Dynon Avionics EFIS-D6. Some builders may elect to combine SkyView with other more conventional “steam” gauges such as mechanical airspeed, altitude, and attitude indicators.

To protect against aircraft electrical failures and anomalies, Dynon Avionics STRONGLY RECOMMENDS that each SkyView display has an SV-BAT-320 Backup Battery connected to it.

SkyView’s attitude algorithm normally uses airspeed to provide superior accuracy. If a problem develops with your airspeed reading due to mechanical blockage of pitot, disconnection of pitot, or other pitot/static issues, a properly connected and configured GPS source acts as a substitute. SkyView systems typically have one or more GPS sources connected to enable Synthetic Vision and Mapping capabilities, but a primary and backup GPS connection is especially important to preserve the attitude indication in the event of loss of airspeed information in IFR aircraft.

In order to provide the most reliable airspeed (and therefore attitude) performance, Dynon Avionics STRONGLY RECOMMENDS the installation of a heated pitot probe in aircraft equipped for IFR to prevent loss of airspeed data due to icing.

Mounting Requirements

Some SkyView modules include mounting fasteners, while some do not. Mounting fasteners are included as a convenience and installers are not required to use them. Use sensible mounting techniques when installing equipment in suitable locations. You should reference individual equipment sections for information regarding installation instructions.

SkyView System Construction

Appendix C: Wiring and Electrical Connections contains complete details regarding pinouts of all SkyView system component connectors and wire harness colors.

Overview

A SkyView system consists of displays, modules, and connection hardware. Displays manage power for modules (not servos) and control communication between devices. Modules provide data to the displays. *The connection between displays and modules is referred to as SkyView Network.*

SkyView Network

SkyView displays, SkyView modules, and the SV-NET-HUB use Male DSUB 9-pin (henceforth referred to as "D9M") connectors. SkyView Network cables use Female DSUB 9-pin (henceforth referred to as "D9F") connectors. Servos have unterminated wires and we recommend the use of one servo cabling kit (SV-NET-SERVO) per servo. All of this connection hardware is available from Dynon Avionics.

Harnesses and Cables

Dynon Avionics SkyView harnesses and Skyview Network cables use aircraft-grade Tefzel® wiring. The SV-HARNESS-D37 breaks out power, serial, USB and other important pins from the back of the display. SkyView Network cables are available in a variety of lengths. The 3 and 6 foot cables have D9F connectors on both ends. The longer cables have a D9F connector on one end and open pins on the other end. The open end allows installers to run the cable in and through areas that would not be possible if a connector was present. The connector is installed after the cable has been run.

The SV-NET-SERVO (one kit per servo) makes it easy to connect the SkyView system to Dynon Avionics servos and includes 20 feet of pre-twisted wire (twisted pair 22 AWG wire for data; 20 AWG wires for power), D9 connectors, connector shells, crimp contacts, an insertion tool, heat shrink, and zip ties. It is recommended that you read and understand Appendix C: Wiring and Electrical Connections before working with this kit.

Splitter (SV-NET-SPL)

The SV-NET-SPL uses aircraft-grade Tefzel® wiring, consist of a D9M input connector and two D9F output connectors, with a length of 1 foot. The primary use for the SV-NET-SPL is the connection of primary and backup ADAHRS in a SkyView network from one network cable coming from a display. For connecting multiple SkyView modules from a SkyView Network cable, using the SkyView Network Hub (SV-NET-HUB) is recommended.

Figure 2 - SV-NET-SPL

Note that SkyView systems installed prior to March 2012 are likely to have SV-NET-SPLs for all SkyView network expansion needs. SkyView systems installed more recently are likely to have fewer splitters (usually, just one at a dual ADAHRS installation), and one SV-NET-HUB.

In SkyView systems installed prior to March 2012, connector gender changers (SV-NET-CHG) allowed SkyView network cables to connect to the output connector of a splitter. This allows a cable split to occur in the middle of a long run of cable.

SkyView Network Hub (SV-NET-HUB)

Figure 3 - SV-NET-HUB

The SV-NET-HUB SkyView Network hub contains 5 SkyView Network ports. All 5 ports are identical, thus any of the 5 ports can be used to connect to your displays, modules, and/or autopilot servos. Servo power should be broken out, as is normally done. See the Autopilot Servo Installation section of this manual for more information about Servo wiring. The SkyView Network Hub is designed to ease the distribution of SkyView Network connections to multiple SkyView Network components by allowing easy expansion of a SkyView network without relying on a more expensive network of individual splitters. It also allows for fewer overall connections over the splitter-only method that was primarily used prior to March 2012 as the hub-based method requires no gender changer connectors.

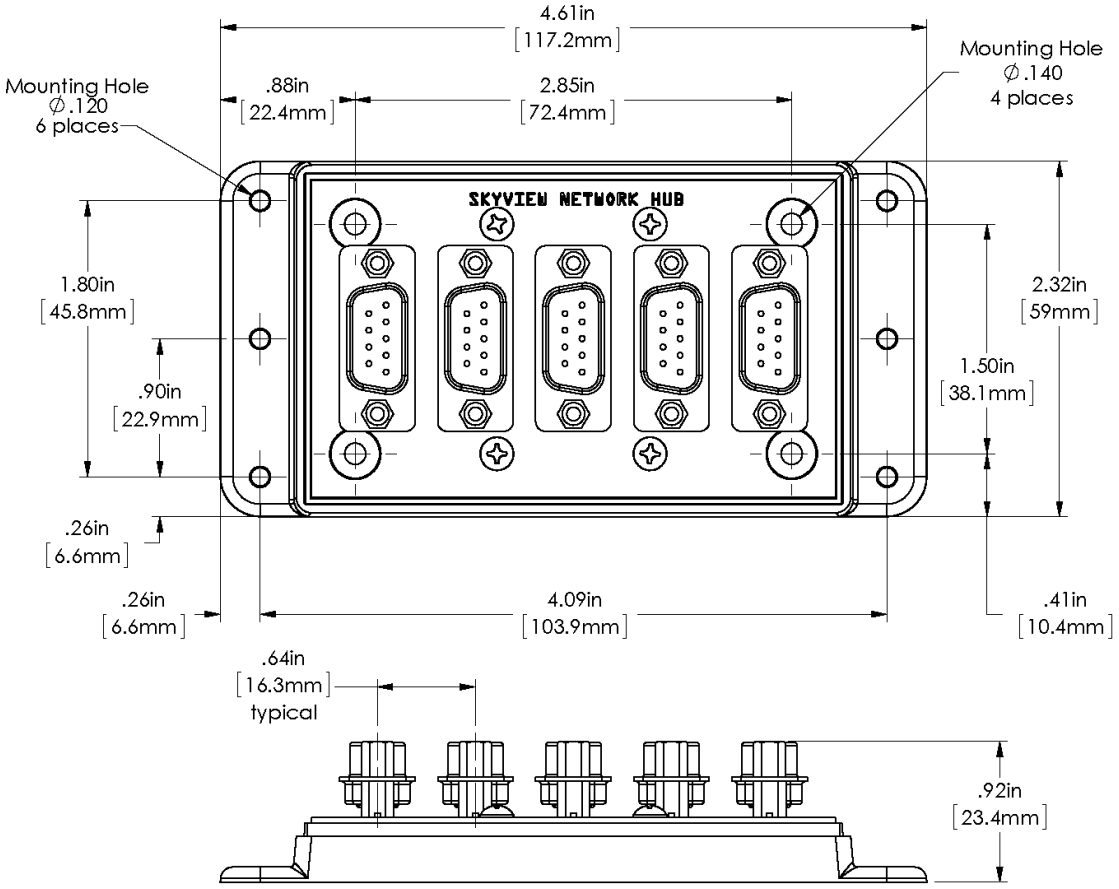

Figure 4 – SV-NET-HUB Dimensions

Test SkyView Network Cable

SkyView displays are supplied with a test SkyView network cable that is intended for bench top testing only. The test network cable is not built with aircraft-grade Tefzel® wiring and should not be permanently installed in an aircraft.

Ethernet Connection

SkyView systems that have more than one display should have their Ethernet ports permanently connected together. Though not a required connection, it allows aviation and obstacle databases to be transferred to all displays in a SkyView system when they are loaded on any one of them. If Ethernet is not connected, aviation and obstacle databases will need to be loaded on each display in the system individually.

Future SkyView functionality may require Ethernet to be connected as described in this section. Therefore, Dynon Avionics strongly recommends connecting all Ethernet ports together at this time.

The Ethernet connection between SkyView displays is *in addition to* the SkyView Network connections, and should be connected on a permanent basis like other SkyView wiring. Dynon Avionics strongly recommends "Low Smoke Zero Halogen" Ethernet cables for use in aircraft, but any Ethernet cable – whether it is a "crossover" or normal "straight" type Ethernet cable - will technically work. Low Smoke Zero Halogen Ethernet cables are available from Dynon Avionics (SV-ETHERNET-3CC). Aircraft containing more than two SkyView displays will need an Ethernet switch with enough ports to connect all SkyView displays together. Contact Dynon Avionics for Ethernet switch recommendations if your aircraft has more than two displays.

There are indicator lights on the Ethernet port that are usually indicative of data transfer on traditional Ethernet devices. In SkyView, they are used instead for display troubleshooting purposes. See the Maintenance and Troubleshooting section for more information about what these lights indicate.

Available Cables and Harnesses

The following table contains Dynon Avionics part numbers and descriptions for the components that will typically be used to test and build a SkyView system. Note: network cables with the "CP" suffix include the second connector—it just is not installed on the cable to facilitate easy routing through tight areas of an aircraft.

Dynon Avionics P/N	Description
SV-ETHERNET-3CC	SkyView Ethernet Cable - Low Smoke Zero Halogen – 3 ft. (0.92 m)
SV-NET-TEST	SkyView Network Test Cable – 10 ft. (3.05 m) One SV-NET-TEST is shipped with each SkyView display. ***Not** Aircraft-Grade Wiring – used for test only!*
*All harnesses and SkyView Network Cables **below** made with Aircraft-Grade Tefzel® Wiring*	
SV-HARNESS-ADSB	Wiring harness for SV-ADSB-470/472/472 – 15 ft. (4.6 m)
SV-HARNESS-D37	Primary Harness for SV-D600/SV-D700/SV-D900/SV-D1000/SV-D1000T
SV-HARNESS-XPNDR	Wiring Harness for SV-XPNDR-261/262 – 15 ft. (4.6 m)
SV-NET-1.5CC	SkyView Network Cable, both ends with connectors – 1.5 ft. (0.46 m)
SV-NET-3CC	SkyView Network Cable, both ends with connectors – 3 ft. (0.91 m)
SV-NET-6CC	SkyView Network Cable, both ends with connectors – 6 ft. (1.82 m)
SV-NET-10CP	SkyView Network Cable, 1 end connector, 1 end pins only – 10 ft. (3.05 m)
SV-NET-15CP	SkyView Network Cable, 1 end connector, 1 end pins only – 15 ft. (4.60 m)
SV-NET-20CP	SkyView Network Cable, 1 end connector, 1 end pins only – 20 ft. (6.10 m)
SV-NET-25CP	SkyView Network Cable, 1 end connector, 1 end pins only – 25 ft. (7.62 m)
SV-NET-30CP	SkyView Network Cable, 1 end connector, 1 end pins only – 30 ft. (9.10 m)
SV-NET-HUB	SkyView Network Hub (5 SkyView Network connections) (Does not include a SkyView Network Cable – purchase separately)
SV-NET-SERVO	SkyView Network Cabling Kit for Autopilot Servos – 20 ft. (6.10 m) One SV-NET-SERVO is used for each servo in most installations.
SV-NET-SPL	SkyView Network Splitter – 1 ft. (0.30 m)

Table 7 – Dynon Avionics SkyView Harnesses and SkyView Network Cables

Example SkyView Systems

SkyView systems are easily scalable and can accommodate a wide variety of components ranging from a single display with one module to multiple displays with multiple modules. The following diagrams illustrate several example SkyView systems and the components needed to build them. Diagrams do not show a connection to aircraft power and do not imply an installation location. Additionally, cable lengths and models pictured below should not be blindly used as a "prescription". Always consider your aircraft's particular geometry and module installation locations before purchasing harnesses, hubs, and splitters.

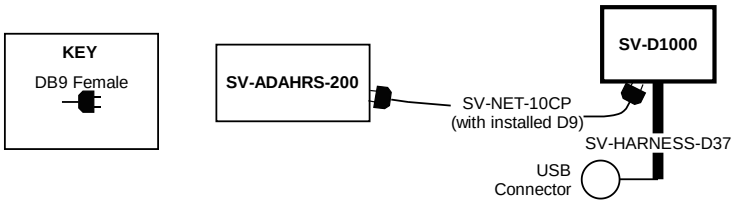

Figure 5 – SkyView System with One Display and One ADAHRS

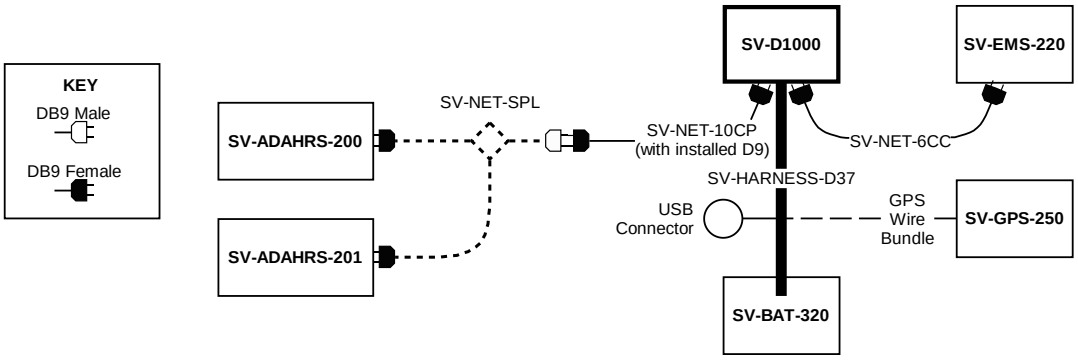

Figure 6 – SkyView System with One Display, One EMS, One GPS, One SV-BAT-320, and Two Redundant ADAHRS

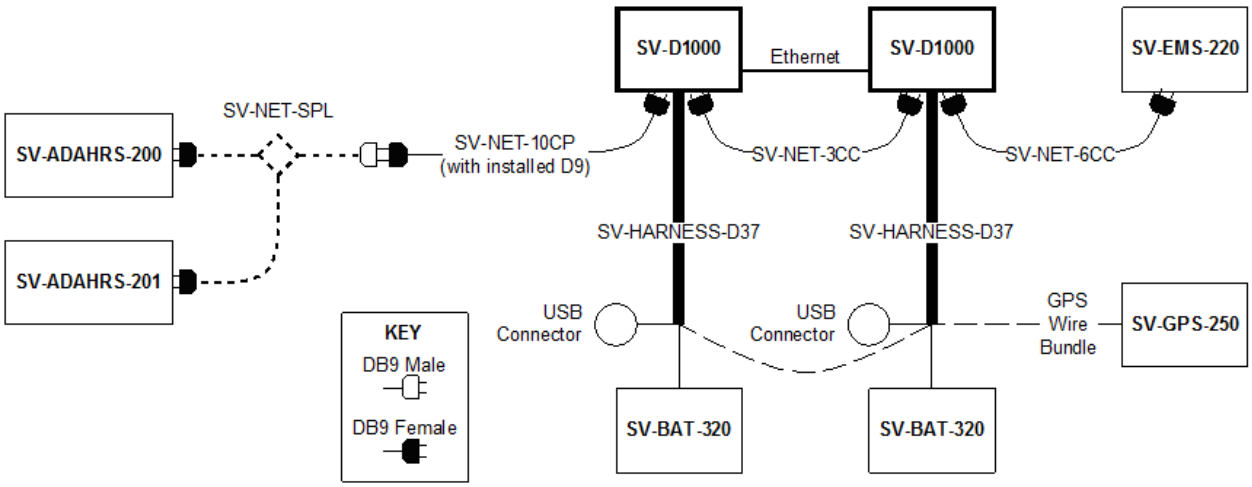

Figure 7 – SkyView System with Two Redundant Displays, One EMS, Two Backup Batteries (One per Display), One GPS, and Two Redundant ADAHRS

Note, that in Figure 7, the SV-GPS-250/2020's power, ground, and output wires are connected to both displays.

The following diagrams show two different ways to lay out a more complex system in which there are more SkyView Network modules than available SkyView Network ports.

The first diagram reflects the way that one would typically build a network when purchasing components prior to March 2012 before the SV-NET-HUB was available. It uses splitters to create all additional SkyView Network connections. This connection methodology is still valid and supported, although the use of a SV-NET-HUB is preferred going forward.

The second diagram reflects the way one can build a network utilizing the SV-NET-HUB to expand the number of available SkyView Network ports instead of splitters. It is both less expensive and utilizes fewer total connections (and no gender changers) when compared with the splitter-based method. Note that a splitter is still useful for wiring two co-located redundant ADAHRS modules. In most installations, this is the only application of the SV-NET-SPL that is necessary when utilizing the SV-NET-HUB to build a SkyView Network.

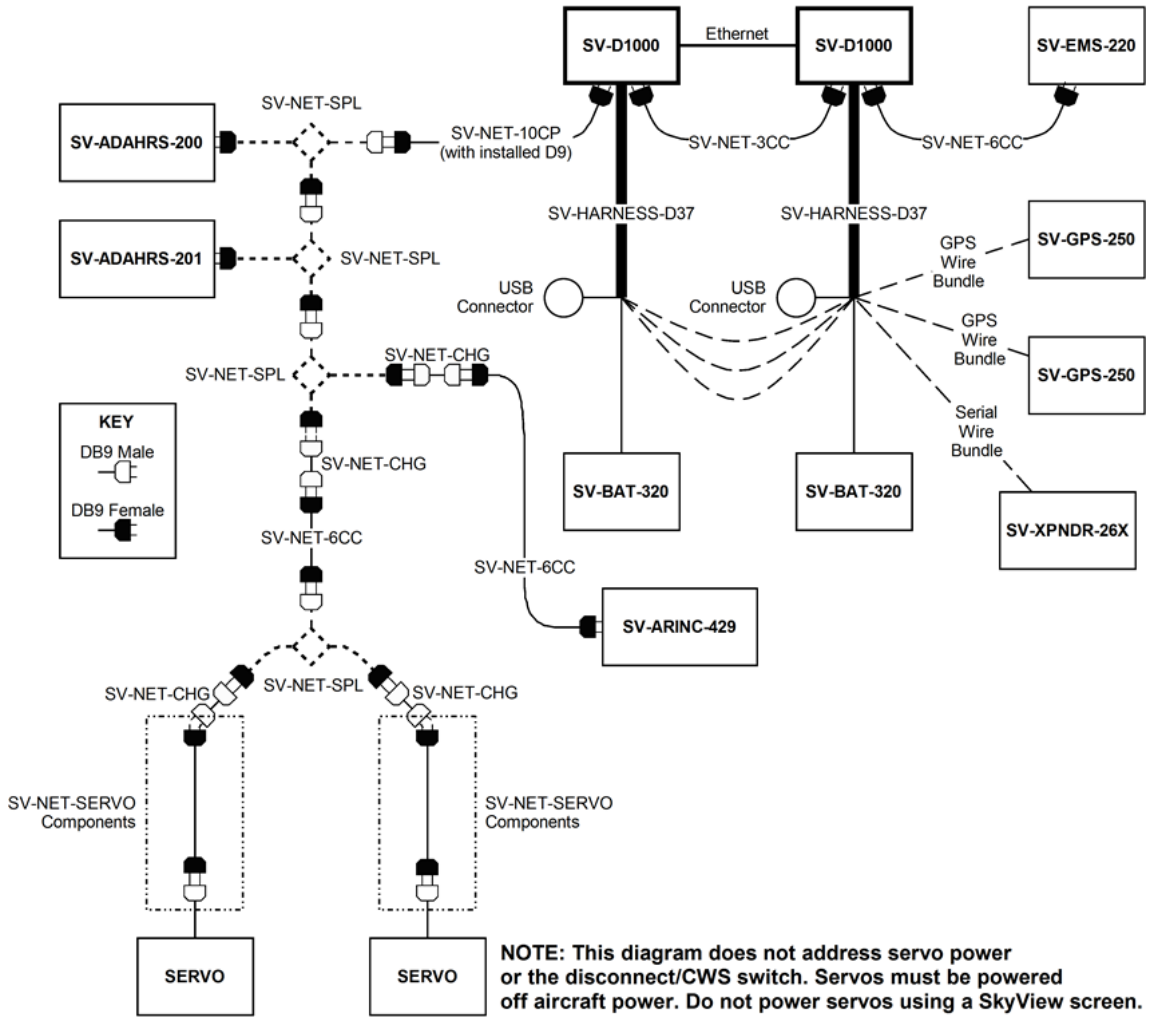

Figure 8 – SkyView System with Two Redundant Displays, One EMS, Two Backup Batteries (One per Display), Two Redundant GPS, Two Redundant ADAHRS, Two Servos, and one Transponder using splitters (legacy installation method)

Note, that in Figure 8, each SV-GPS-250/2020's power, ground, and output wires are connected to both displays on different serial ports. The primary SV-GPS-250/2020 should be connected to serial port 5 on each display. The secondary SV-GPS-250/2020 should be connected on another serial port on each display.

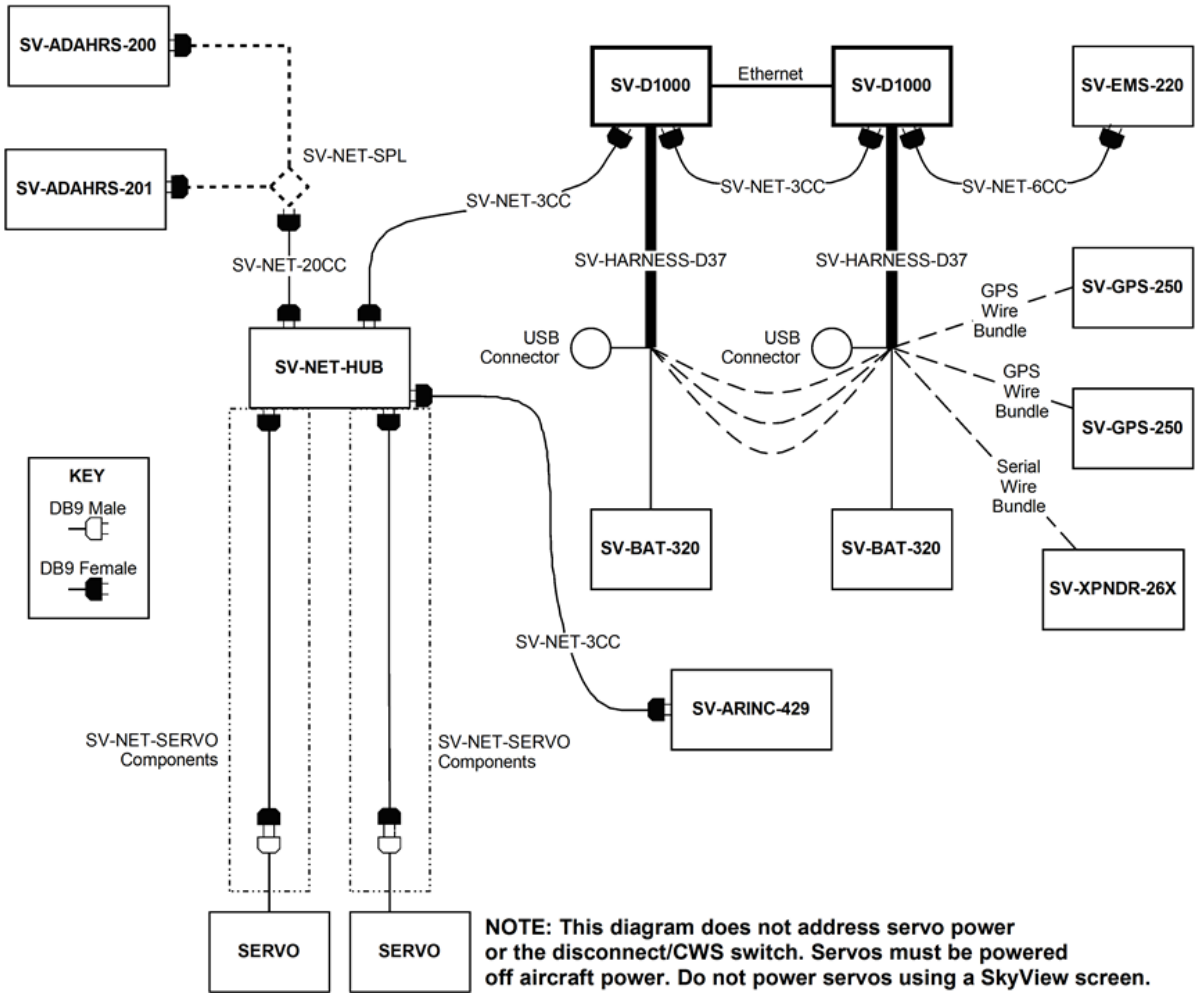

Figure 9 – SkyView System with Two Redundant Displays, One EMS, Two Backup Batteries (One per Display), Two Redundant GPS, Two Redundant ADAHRS, Two Servos, and one Transponder using a hub (recommended installation method)

Note, that in Figure 9, each SV-GPS-250/2020's power, ground, and output wires are connected to both displays on different serial ports. The primary SV-GPS-250/2020 should be connected to serial port 5 on each display. The secondary SV-GPS-250/2020 should be connected on another serial port on each display.

Additionally, if there are both multiple displays and multiple SV-GPS-250/2020 units in the system, power for the secondary GPS should be sourced from the GPS power wire on the second display – in other words, each SV-GPS-250/2020 should receive power from a different display. Reference the SV-GPS-250/2020 GPS Receiver Installation and Configuration Section for more information on this configuration.

HSI Requirements

SkyView's HSI overlay on the PFD DG can be driven by its own built-in Navigation Mapping system. Additionally, external GPS and NAV radio sources can be used as well. Reference the RS-232 Serial Devices and SV-ARINC-429 Installation and Configuration sections of this guide for more information regarding external data sources.

The SV-GPS-250/2020 provides only a position source (a subset of the data provided by other GPS devices such as a Garmin X96). The SV-GPS-250/2020 cannot provide navigation without the Navigation Mapping system and appropriate aviation databases installed.

Table 8 outlines the functionality enabled by each source of data.

Data	SkyView SV-GPS-250 SV-GPS-2020	SkyView Map System	Generic NMEA GPS	Generic Aviation GPS	ARINC-429 GPS via SV-ARINC-429[3]	ARINC-429 / Serial (SL30) NAV[4]	SkyView SV-ADAHRS-200 SV-ADAHRS-201	SkyView SV-MAG-236
4-5 Hz GPS Updates	✓							
Bearing Pointers		✓	✓	✓	✓	✓		
Course Deviation		✓	✓	✓	✓	✓		
Course Direction		✓	✓	✓	✓	✓		
Distance to Waypoint		✓	✓	✓	✓			
Glideslope						✓		
GPS Altitude	✓		✓	✓	✓[5]			
Ground Speed	✓		✓	✓	✓			
Ground Track	✓		✓	✓	✓			
Latitude Longitude	✓		✓	✓	✓			
LPV/VNAV GPS Approaches					✓[6]			
Magnetic Heading							✓	✓
SkyView Time Source	✓		✓		✓			
To/From Flag		✓	✓	✓	✓	✓		
Tuned Frequency						✓		
True Airspeed							✓[7]	
VFR Vertical Guidance			✓[8]					
Virtual-DME		✓						
Waypoint or Station Identifier		✓	✓	✓	✓	✓		
Winds[9]	✓		✓	✓	✓		✓	✓

Table 8 – HSI Requirements

[3] SkyView SE does not support SV-ARINC-429.
[4] SkyView SE does not support external navigation devices.
[5] Requires additional Aviation format serial input into SV-ARINC-429 module.
[6] Approach-certified WAAS GPS units only.
[7] True Airspeed calculation requires a connected OAT sensor.
[8] Some models (including Garmin X96 series).
[9] Winds calculation specifically requires GPS, a connected OAT sensor, IAS, and magnetic heading.

3. Basic SkyView Display Operation

After reading this section, you should be familiar with basic SkyView display operation including how to use joysticks, knobs, and buttons, how to turn displays on and off, how to access and navigate menus, how to configure the SkyView network, and how to perform Software updates and other file operations.

The SkyView SV-D700 and SV-D1000/D1000T displays are identical in functionality and presentation. Other than the Touch features of the SV-D1000T (not present on the SV-D700 or the SV-D1000), the only difference is in the size and resolution of the screen.

The SkyView SE SV-D600 and SV-D900 displays are identical in functionality and presentation. The only difference is in the size and resolution of the screen.

The SkyView SV-HDX800 and SV-HDX1100 displays are identical in functionality and presentation. The only difference is in the size of the screen.

Screen Synchronization

SkyView is designed to operate as an integrated system. SkyView configurations with more than one display automatically share and synchronize settings on all displays. In-flight settings such as baro and bugs are synchronized in real time as they are adjusted. Setup menu items are synchronized when the user exits the setup menu and also at boot up. Aviation and obstacle databases are synchronized when they are loaded on any screen if Ethernet is connected.

It is not possible to have displays on the same network that do not share configurations, settings, and real time items. Even if a unit is off when settings are adjusted, they will be synchronized when they boot up.

For displays to properly synchronize settings their tail numbers must be the same and SkyView Network must be configured correctly. See the Network Setup and Status Section of this manual for information about these required setup steps.

Only one setup menu in the network may be open at once. If you try to open a setup menu on a display while it is open on another display, you will see OTHER SCREEN IN SETUP on the screen and thus cannot open the setup menu. There is no "master" in the system; changes made on any screen in the system will be automatically reflected on all other screens.

Some things are purposefully not synchronized on displays: Software, sensor configuration files (.sfg), and local display settings. You must ensure that each display is running the appropriate Software, up-to-date databases, and sensor configuration file. All of these files are available for download at http://downloads.dynonavionics.com. Also ensure that each display's local settings are appropriately configured.

Display Bezel Layout

The following diagram illustrates the front of an SV-D1000 display and its important parts.

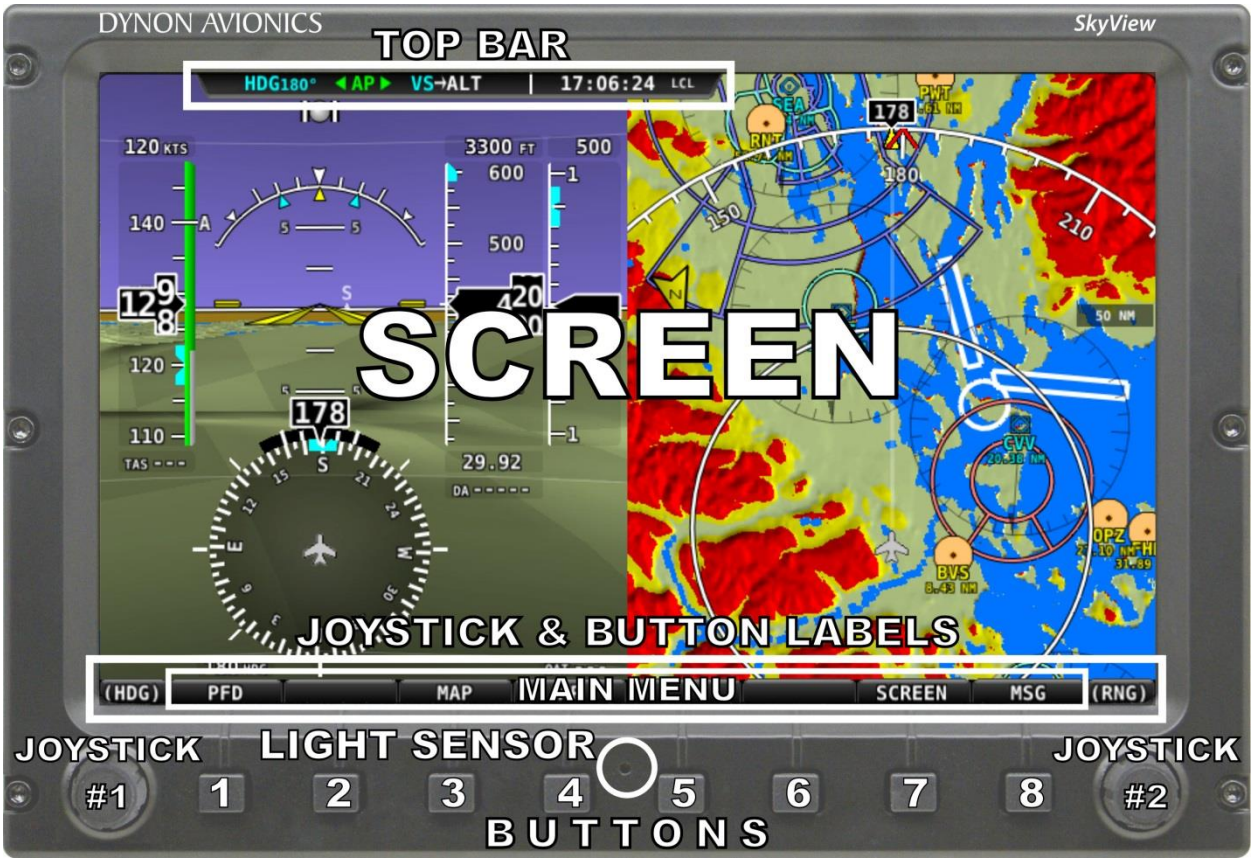

Figure 10 – SkyView Display Front Bezel Layout

Note the top bar, screen, joystick and button labels, light sensor, two joysticks and eight buttons.

The top bar displays important textual information. The top bar shows time, autopilot status, and transponder status (SV-XPNDR-261/262 or Garmin GTX-327 only). Reference the LOCAL DISPLAY SETUP Menu Section of this guide for details on how to configure the top bar.

The screen shows PFD, Engine, and Moving Map data, configuration information, and system alerts. Its layout is user-configurable. Reference the SkyView Pilot's User Guide for instructions on how to configure the layout of your screen.

Joystick and button labels are also on the screen. *Joystick and button functionality is contextual based on what is onscreen and these labels show the user the current function.* For example, the (RNG) label above joystick 2 in Figure 10 shows that turning that joystick will either increase or decrease the range shown on the Moving Map.

The set of button labels displayed immediately after the display turns on is referred to as the *Main Menu*.

Each SkyView display has an integrated light sensor in the bezel. This light sensor can be used for automatic backlight level management. Reference the Display Setup Section of this guide for instructions on how to configure the display for automatic backlight level management.

Joystick and Button Operation

Joysticks and buttons are used for various functions including powering the unit on and off, entering and navigating menus, and adjusting values.

Operation Basics

SkyView Classic and SkyView SE joysticks can be turned and moved. Specific joystick behavior is addressed in subsequent sections of this guide when necessary.

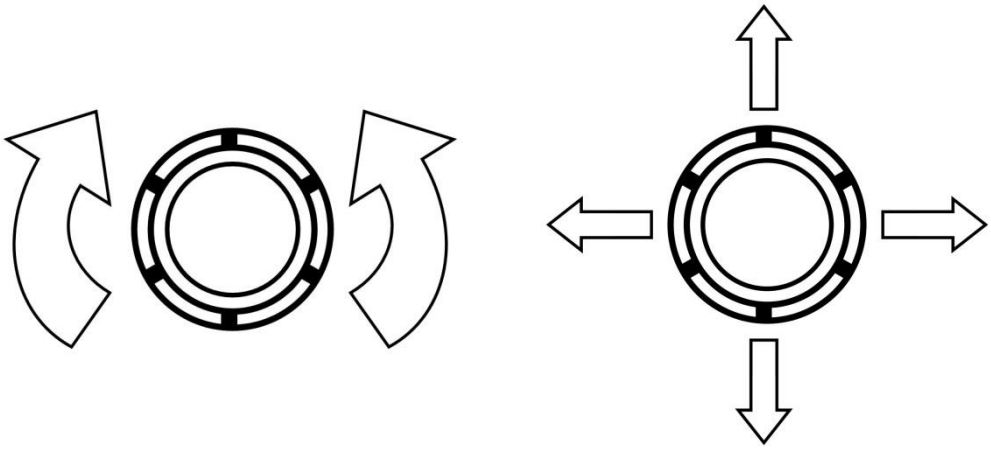

Figure 11 – SkyView Classic and SkyView SE Joystick Turn (left) and Movement (right) Directions (Pushbutton Function Not Shown)

Because it incorporates an advanced touch screen interface, SkyView HDX knobs (unlike SkyView Classic and SkyView SE) do not move (click) up, down, left, or right – they only rotate clockwise and counter-clockwise. Like SkyView Classic and SkyView SE's knobs, SkyView HDX knobs incorporate a pushbutton function.

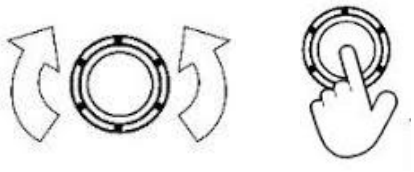

Figure 12 – SkyView HDX Knob Rotation and Pushbutton Action

A keypad button has a function if there is a label above it. If there is no label, there is no function. The figure below shows an example button label.

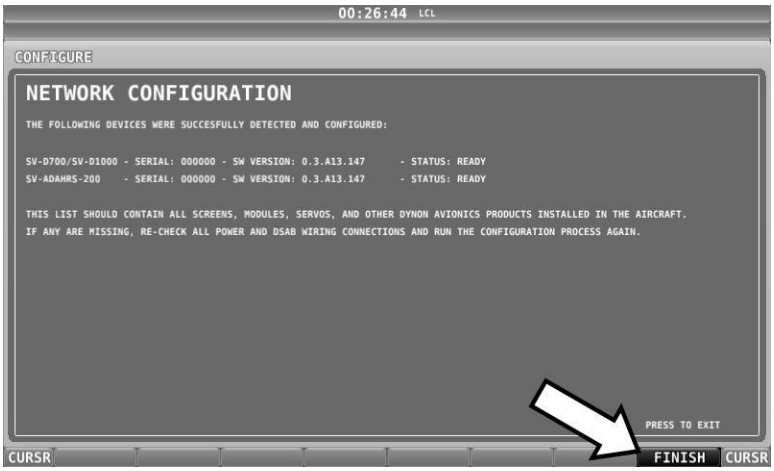

Figure 13 – Example Button Label

When you press a button, its label is highlighted. When you let go, that button's action is invoked.

Button labels are called out in all capital letters such as BACK, EXIT, FINISH, and CLEAR. This guide directs users to press a button by using its label. For example, when this guide asks you to press FINISH, it is asking you to press the button with the FINISH label above it.

SkyView Classic and SkyView SE Joystick and Button Operation Example

When a parameter needs to be adjusted, the SkyView Classic and SkyView SE's joystick controls are used to change the parameter. When setting values with the joystick, each character (symbol, letter or digit) must be selected and adjusted successively.

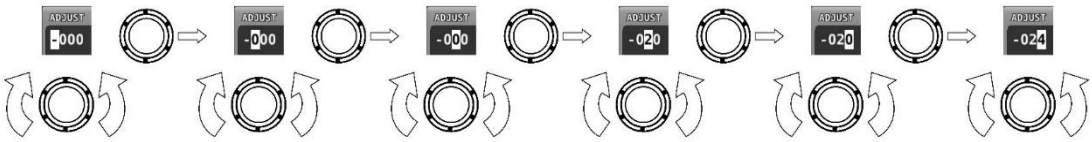

Figure 14 – Adjusting Successive Characters in SkyView Classic and SkyView SE

In this example, the first time you turn the joystick, you toggle between the "-" and "+" symbols. To change the succeeding characters, you must move the cursor joystick to the right. In this example, you first adjust the "-" or "+" character, move the joystick right, then adjust the one hundreds digit, and so forth. Once you have adjusted the value appropriately, press ACCEPT or move the joystick to the right again.

At times, the next item in the menu path in this guide may be a joystick selection OR a button push—the correct choice will be apparent.

SkyView Touch – Touch Interface Features Not Used in Setup Menus

Touch interface features are not enabled in the SV-D1000T's Setup Menu; touch interface features are not generally used during installation and initial setup.

In normal operation, in addition to using the conventional buttons and joystick knobs, many of the on-screen elements can be touched to control SkyView. Details about how touch is used in normal operation are covered in the SkyView Classic Pilot's User Guide.

SkyView HDX Knob and Button Operation Example

When a parameter needs to be adjusted, the SkyView HDX's knob / button is used to change the parameter. When setting values with the knob, each character (symbol, letter or digit) must be selected and adjusted successively.

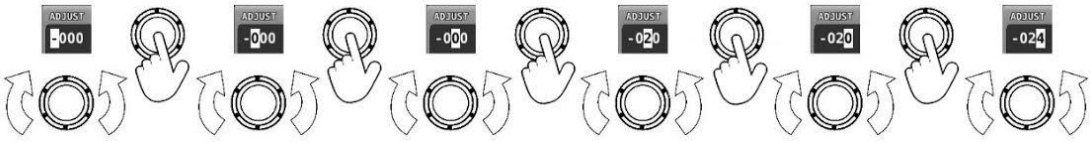

Figure 15 – Adjusting Successive Characters in SkyView HDX

When the parameter is first displayed, the most significant (left-most) field is highlighted. Rotate the knob clockwise to increment the parameter, or counter-clockwise to decrement the parameter. In this example, the first time you rotate the knob, you toggle between the "-" and "+" symbols.

After changing the parameter to the desired value, push the knob (pushbutton) to accept the desired value. The cursor will automatically change to the next field (to the right). Once you have adjusted the value appropriately (finished entering the desired data), pushing the knob will generally accept the entire value and return to the menu. Occasionally, it is necessary to press ACCEPT button (on the keypad).

When in a list of menu items, to move up and down the menu, simply rotate the knob *clockwise* to move *down* the menu, and *counter-clockwise* to move *up* the menu. When the desired menu is highlighted, push the knob (pushbutton) to enter the desired menu.

Menu Navigation

After the display turns on, you will see a screen similar to the one in Figure 10. This guide refers to the label bar at the bottom of the screen as the *Main Menu*.

Throughout this guide, the ">" character is used to indicate a sequence of menu selections or other actions you would take as you navigate the menu system. Menu selections which are followed by "…" indicate full-screen wizard interfaces which guide you through the appropriate steps. These wizard interfaces are not described in detail in this guide, as the on-screen instructions provide adequate information.

SkyView menus follow this structure: SETUP MENU > MENU > ... > MENU > PAGE or WIZARD. The setup menus (In Flight Setup or Setup) are the root of most menu navigation. Each nested menu is more specific than the previous one and there is no set limit for the number of nested menus before reaching a page. A page or wizard is at the end of the chain and it is where the user can perform a specific action such as change a specific setting, configure a SkyView network, or set up the layout of the onscreen engine gauges. Wizards employ easy-to-follow onscreen instructions.

For example, SETUP MENU > SYSTEM SETUP > MEASUREMENT UNITS > BAROMETER indicates entering the SETUP MENU, then selecting SYSTEM SETUP, then selecting MEASUREMENT UNITS, and then entering the BAROMETER Menu to select INHG, MBAR, or MMHG.

Table 9 is a summary of menu navigation.

Desired Menu Action	User Action
Enter the Setup Menu	Simultaneously press and hold buttons 7 and 8 (if airspeed is greater than zero, you will enter the In Flight Setup Menu)
Scroll through different menus	Rotate joystick or knob OR SkyView Classic / SE: Move either joystick up or down
Enter menu	SkyView Classic /SE: Move joystick toward the right SkyView HDX: Push the knob (pushbutton)
Return to previous menu	SkyView Classic / SE: Move joystick toward the left (saves settings) OR Press BACK (saves settings) OR Press CANCEL (does not save settings)
Save adjusted value	Press ACCEPT
Reset adjustable value	Press DEFAULT

Desired Menu Action	User Action
Save settings and return to Main Menu	Press EXIT

Table 9 – Menu Navigation Summary

Basic Display Operation Procedures

This subsection covers basic operation procedures for displays. Detailed instructions for various menus and individual menu items are described later in this guide.

How to Turn the System On or Off

Table 10 summarizes the procedures for toggling SkyView system power states.

SkyView System Displays	Toggle SkyView System Power
One display	Toggle primary power state OR Toggle display power by pressing and holding button 1
Multiple displays	Toggle primary power state OR Toggle all displays off or on by pressing and holding button 1 on each display.

Table 10 – How to Toggle SkyView System Power State

Loss of Aircraft Power with SV-BAT-320 Connected

If external power is lost to a display that is connected to a SV-BAT-320 Backup Battery, it will either stay on for an additional 30 seconds or stay on indefinitely depending on whether or not the aircraft is in flight. This feature minimizes SV-BAT-320 discharge when on the ground and master/external power is shut off normally while simultaneously reducing pilot workload during an actual in-flight power loss.

If the aircraft is not in flight, SkyView displays the message “POWERING DOWN IN xx SECONDS” while counting down from 30 seconds. During this countdown, the menu displays the buttons STAY ON and PWR OFF at the bottom of the screen. Press PWR OFF to turn off the SkyView display immediately. Press STAY ON to keep the SkyView display on via the connected SV-BAT-320. If STAY ON is pressed, the display will continue to use the SV-BAT-320 to power itself until the battery’s charge is depleted or the display is turned off manually pressing and holding button 1. Finally, if neither button is pressed before the countdown expires, the display will automatically turn off after 30 seconds to conserve the SV-BAT-320 charge.

If the aircraft is in flight, SkyView displays the message “AIRCRAFT POWER LOST” with no additional count down. This ensures that active pilot action is required to turn off a display when power is lost in-flight and SV-BAT-320 power is available. The STAY ON and PWR OFF buttons are still offered, but the display will stay on indefinitely unless PWR OFF is pressed.

How to Reboot the Display

Press and hold buttons 1, 2 and 5 simultaneously to instantly reboot the system. This may be helpful if you need to cycle power after changing certain settings and for general troubleshooting.

How to Manually Adjust the Screen Brightness (Dim)

Manual control of screen brightness (SCREEN > DIM button) is not supported in SkyView SE. Screen brightness in SkyView SE can changed with automatic brightness control using the ambient light sensor, or using an external dim control signal.

A SkyView display's backlighting (brightness) is primarily controlled by its ambient light sensor. If you have more than one SkyView display, each display's ambient light sensor is incorporated. You can adjust the brightness / dimming to your preference by SCREEN > DIM to access the DIM Menu. To decrease or increase the backlight brightness press DEC- or INC+, respectively or simply rotate the knob labeled DIM – clockwise to brighten, counter-clockwise to dim. To set the backlight brightness to 100%, press FULL. SkyView will not allow you to dim the display(s) to a level that would cause it to be illegible for the ambient lighting conditions.

Reference the Display Setup Section of this guide for instructions on specifying the display's backlight brightness control method.

How to Enter the Joystick / Knob Function Menu

The Joystick / Knob Function menus are used to specify which bug that knob or joystick adjusts if rotated. For example, knob or joystick 1 could be set to adjust the Heading bug and knob or joystick 2 could be set to adjust the Altitude bug.

If you have a SkyView Classic or SkyView SE display, move the joystick up, down, left, or right to enter its Function Menu.

If you have a SkyView HDX display, push the knob (pushbutton) to enter its Function Menu. Figure 16 illustrates the Joystick / Knob menu.

Figure 16 – Joystick / Knob Menu

To set the function of a SkyView Classic or SkyView SE joystick:

1. Move a joystick up, down, left, or right to enter the Joystick's function Menu.
2. Choose the joystick function by moving the joystick up or down.
3. Confirm the highlighted function by moving the joystick left or right.

To set the function of a SkyView HDX knob:

1. Push the knob (pushbutton) to enter the knob's Function Menu.
2. Choose the joystick function by rotating the knob clockwise or counter-clockwise.
3. Confirm the highlighted function by pushing the knob (pushbutton)
   OR
   Wait approximately 7 seconds; the Function Menu will close and the highlighted function will be selected.

If the Map Page is onscreen, the joystick or knob closest to the Moving Map is labeled (RNG) and is used to adjust the map's range. It cannot be assigned a different function.

If the Joystick / Knob Function menu does not display all of the Bugs that you wish to select from, some of the Bugs are disabled. To enable the desired Bugs, go to the PFD menu and select BUGS. In the BUGS menu, enable the desired bugs. Then the desired Bugs will be selectable in Joystick / Knob menu.

How to Enter the Setup Menus

There are two setup menus: the *Setup Menu* and the *In Flight Setup Menu*. Simultaneously pressing and holding buttons 7 and 8 will open one of these menus. If airspeed is zero, the Setup Menu opens. If airspeed is greater than zero, the In Flight Setup Menu opens.

You may also access the Setup Menu from the In Flight Setup Menu by using the ENTER FULL SCREEN SETUP MENU… option.

How to Adjust Time Zone Offset

First, configure the Top Bar to display time in SETUP MENU > LOCAL DISPLAY SETUP > TOP BAR SETUP > TIME: ZULU | LOCAL.
Then, adjust your preferred offset from the time currently displayed on the Top Bar – SETUP MENU > SYSTEM SETUP > TIME.

How to Configure Units of Measure

Displayed units can be configured for altitude, distance and speed, temperature, barometer, pressure, and volume. Displayed units are configured on the Measurement Units Page (SETUP MENU > SYSTEM SETUP > MEASUREMENT UNITS).

In Flight Setup Menu

This menu contains links that may be useful during flight:

- ADAHRS SOURCE SELECTION…
- FLIGHT ANGLE PITCH ADJUST…
- COMPASS CALIBRATION….
- AOA CALIBRATION…
- AUTOPILOT SETUP…
- ENTER FULL SCREEN SETUP MENU…

Note that *this menu occupies only half of the screen* and that all of the links in the In Flight Setup Menu are accessible via the SETUP MENU.

SETUP MENU

This menu contains links to system configuration options:

- SYSTEM EVENT
- SYSTEM SOFTWARE
- SYSTEM SETUP
- LOCAL DISPLAY SETUP
- PFD SETUP
- EMS SETUP
- MAP SETUP *(Not supported in SkyView SE)*
- AUTOPILOT SETUP
- TRANSPONDER SETUP
- TRAFFIC SETUP *(Not supported in SkyView SE)*
- VP-X SETUP *(Not supported in SkyView SE or SkyView HDX [as of Software v15.0])*
- ACM SETUP *(Not supported in SkyView SE)*
- ADS-B STATUS *(Not supported in SkyView SE)*
- COM RADIO SETUP
- HARDWARE CALIBRATION

Note that this menu occupies the entire screen. The menus above have menus of their own. The information in this section contains information on the purposes of each of the above menus as well as a list of each menu's respective menus and their functions.

Pages and wizards that require users to do something have explicit onscreen instructions. Most actions are simple enough and onscreen instructions are more than adequate. In these cases, explicit instructions are not contained in this guide. In cases where onscreen instructions are not present, instructions are included in this guide.

The menu options descriptions in *this* section are intended to be *introductory / overview*, not comprehensive. Comprehensive explanations of menu options can be found *onscreen, in* the SkyView system, in the installation instructions in the specific section of this manual for each subsystem, such as SV-EMS-220/221 or SV-XPNDR-261/262.

SYSTEM EVENT Menu

The SYSTEM EVENT menu will only appear if the SkyView display detects that a “system event” has occurred on (one of your) SkyView display(s).

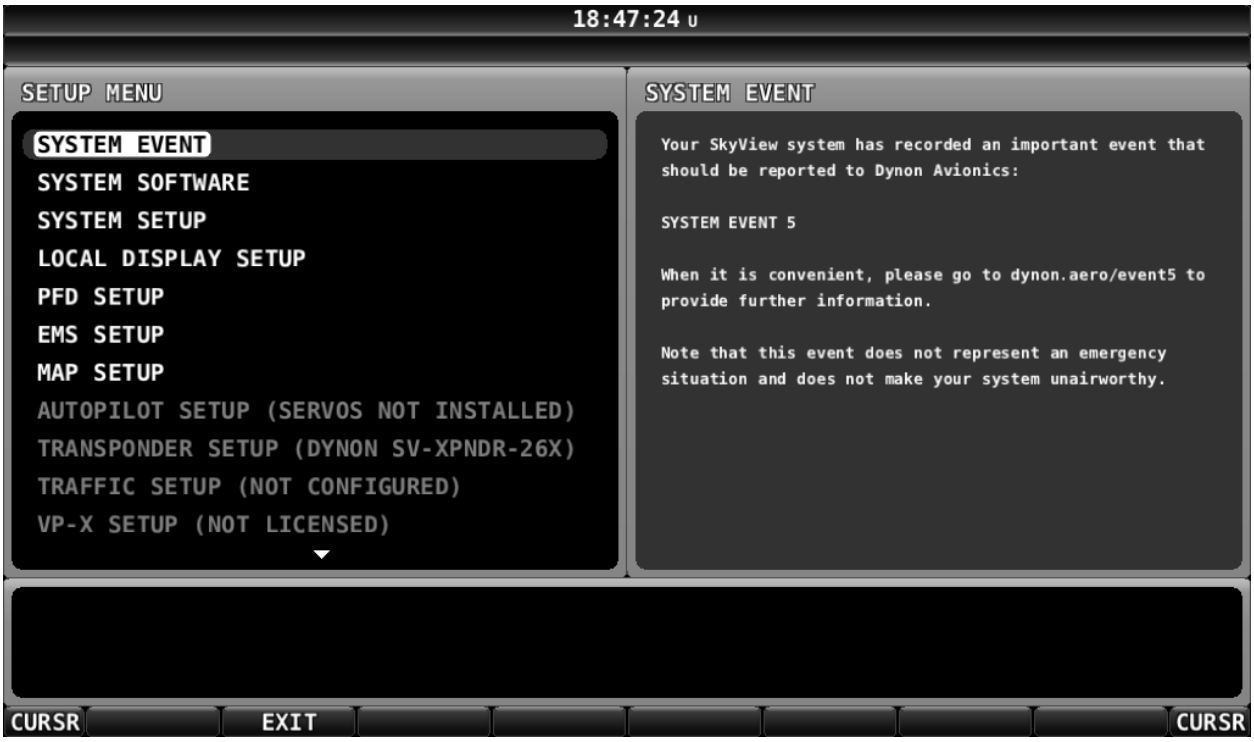

If no critical system events have occurred on your SkyView display, "SYSTEM EVENT" will not appear as a menu item.

If SYSTEM EVENT does appear, it contains instructions on what to do next.

SYSTEM SOFTWARE Menu

You must have a USB flash drive that is recognizable by the display in one of the USB slots to open this menu. All of the functions under this menu either write to or read from the flash drive.

Detailed instructions for all of the menus listed below are included in the Software Updates and File Operations Section of this guide.

The SYSTEM SOFTWARE Menu contains links to the following wizards:

- UPGRADE SYSTEM SOFTWARE... – Use this wizard to update Software on your SkyView system.
- LOAD FILES... – Use this wizard to load files such as settings or configuration files or delete files from the USB flash drive.
- EXPORT SETTINGS... – Use this wizard to export the settings on your SkyView system to a USB flash drive. Note that (as of V6.0) calibration settings are not exported, including servo calibrations, fuel tank calibrations, and compass calibrations.
- EXPORT USER DATA LOGS… – Use this wizard to export user data logs in human-readable CSV format. See Appendix F: User Data Logs for further information about user data logs.
- EXPORT USER WAYPOINTS… – Use this wizard to export all of the User Waypoints that are currently stored in your SkyView system.

- EXPORT DYNON DIAGNOSTIC FILE... – This specialized data log can only be interpreted by Dynon Avionics personnel; there is no data in it that can be interpreted by SkyView pilots. Dynon Avionics Technical Support may request this log in the course of troubleshooting, especially for issues related to AP performance. Note that this log is very big – over 500 MB – and takes minutes to save to a USB flash drive. Unless directed to export this log by Dynon Avionics, there is no reason to do so.
  If you have more than one SkyView display in your system, you may be requested to save the Dynon Avionics Diagnostic File from each of your SkyView displays as each display can sometimes contain different diagnostic data. If you save the Dynon Avionics Diagnostic File from multiple displays onto the same USB flash drive, use the 33-character name field to distinguish the two files, such as naming one “LEFT” and the other one “RIGHT”.

SYSTEM SETUP Menu

This menu contains menus and pages related to the entire SkyView system. When a setting is changed in one of these menus, it is synchronized to other SkyView displays.

- SKYVIEW NETWORK SETUP – Enter this menu to configure your SkyView network or to check on network status (i.e., display important SkyView module information).
- WI-FI SETUP – Enter this menu to configure the Wi-Fi system – password, etc.
- SERIAL PORT SETUP – Enter this menu to configure the five general purpose serial ports on all displays.
- AUDIO SETUP – Enter this menu to configure the options and volume for SkyView’s audio output capability.
- AIRCRAFT INFORMATION – Enter this page to record important information regarding your aircraft. Specifically, enter the tail number of your aircraft–it is used to create unique SkyView configuration files. It is also used for other purposes. Note that for US planes, the leading N is a required part of the TAIL NUMBER. TAIL NUMBER should not include dashes (-) or spaces. Examples:
  Correct: N12AB
  Incorrect: N-42SV or N 42SV
- MEASUREMENT UNITS – Enter this page to configure displayed units (e.g., feet or meters).
- TIME – First, configure the Top Bar to display time in SETUP MENU > LOCAL DISPLAY SETUP > TOP BAR SETUP > TIME: ZULU | LOCAL. Then, in this menu, adjust your preferred offset from the time currently displayed on the Top Bar.
- ARINC-429 – Enter this page to set up ARINC-429 devices connected to SV-ARINC-429 modules.
- SCREEN LAYOUT SETUP – Enter this page to configure the availability of the PDF Page, Engine Page, and Map Page on this display and throughout the system (when more than one display is installed).
- PRIMARY COM – Selects the COM radio to be displayed on the Top Bar and receive a frequency setting when the APT→COM button is pushed in the MAP MENU. If only one COM radio is installed, this must be set. If two COM radios are installed, only one can be displayed on the Top Bar and receive a frequency setting when the APT→COM button is pushed in the MAP MENU.

- DISPLAY COM IN TOP BAR – Selects whether, or not, frequencies, PTT status, etc. from the COM radio (selected in PRIMARY COM, above) is displayed.
- DATA LOG SETUP – Enter this page to configure the recording frequency of SkyView's internal data logging feature, or to clear recorded data. See the User Data Logs Appendix for further information about user data logs.

LOCAL DISPLAY SETUP Menu

This menu contains menus and pages related to the individual SkyView display on which this menu is displayed. These settings can be different on one display from another display.

- INSTALLED DATABASES – Shows the various databases that are installed on this display and their respective versions.
- DISPLAY HARDWARE INFORMATION – Shows important hardware status information such as the "Edition" of your SkyView display (SKYVIEW, or SKYVIEW SE), serial number of your display and the voltage of the attached SV-BAT-320. Reference the Returning SkyView Components to Service after Repair Section of this guide for more information about the Display Hardware Information Page.
- BRIGHTNESS SETUP – Choose between manual, automatic, or external screen backlight control. Manual screen backlight control is managed by the user in the DIM Menu with the DEC-, INC+, and FULL buttons. Automatic screen backlight control is managed by a default dimming profile in the display. A compatible external control signal is required for external backlight control. Reference the Brightness Setup Section for more information.
- TOP BAR SETUP – Configure the top bar on the SkyView display's screen.
- GPS FIX STATUS – Shows fix quality information for the GPS source that is being used as the active position source for SkyView's moving map and synthetic vision. Note that this does not show information about other GPS sources that may be available for HSI and backup position use.
- BATTERY BACKUP (SV-BAT-320) STATUS – Shows the status of automated tests of the SV-BAT-320.
- LICENSE – This page shows the status of Software products that can be purchased and licensed to add features to SkyView. This page is also the place where license codes can be redeemed to activate features on your SkyView System.
- DISPLAY LANGUAGE – ENGLISH (ENGLISH) | (alternate language). If a language pack is installed, you can configure this display to display the alternate language. If a language pack has not been loaded, this option will be grayed out and not accessible. Language packs can be downloaded from http://downloads.dynonavionics.com.

  Alternate languages are not supported in SkyView SE – SkyView SE will display only in US English. If you intend to install and use SkyView SE, do not install an alternate language pack.

- VIDEO INPUT SETUP – If a SkyView Video Input Adapter (USB) is connected to this display, options such as video input format and orientation can be selected. If a SkyView Video Input Adapter (USB) is not installed, this selection is grayed out and not accessible.

PFD SETUP Menu

This menu contains menus and pages related to Primary Flight Display page and data source (ADAHRS module).

- ADAHRS SOURCE SELECTION–This page has a list of all configured SkyView ADAHRS modules and their respective status. The ADAHRS module used as the PFD's source of data can be selected.
- FLIGHT ANGLE PITCH ADJUST – This page allows you to adjust the displayed pitch of the waterline symbol (aircraft reference on the attitude indicator) to compensate for the aircraft's attitude in level flight. That attitude can change depending on aircraft loading. This setting is not intended to compensate for an ADAHRS module that is not installed correctly.
- AIRSPEED LIMITATIONS – Enter this menu to configure the V-speeds and specify optimal flight parameters such as best angle of climb speed, best rate of climb speed, and maneuvering speed.
- VERTICAL SPEED SCALE – Enter this page to configure the vertical speed tape's scale.
- G METER – Enter this page to configure G values that will cause the G Meter to be automatically displayed when exceeded; to set the yellow/red cautionary color ranges of the G meter; and whether or not the max/min recorded Gs are reset at each SkyView boot-up.
- FLIGHT PATH MARKER – Enter this page to enable/disable display of the flight path marker.
- EXTREME PITCH WARNING – Enter this page to enable/disable display of the extreme pitch warning indicators.
- ANGLE OF ATTACK – Enter this page to enable/disable display of the Angle of Attack indicator.
- ALTITUDE BUG ALERTER – Enter this page to configure the altitude alerter, an audible alert when you are approaching or departing the altitude set in the ALT bug.
    - CAPTURE BAND: When the altitude of the aircraft flies within this amount of feet/meters of the altitude bug (when displayed), SkyView will announce "approaching altitude" aurally (if audio output is configured)
    - DEVIATION BAND: When the altitude of the aircraft climbs above or descends below the altitude bug by the amount of feet or meters set here, SkyView will announce "departing altitude" aurally (if audio output is configured).
- PFD MODE
    - LAYOUT
        - ALWAYS EFIS – The EFIS layout will always be displayed. The EFIS / SIX-PACK button is *not* present in the PFD > MODE menu.
        - ALWAYS SIX-PACK – The SIX-PACK layout is always displayed. The EFIS / SIX-PACK button is *not* present in the PFD > MODE menu.
        - SELECTABLE – the EFIS / SIX-PACK button *is* present in the PFD > MODE menu, allowing either EFIS or SIX-PACK layout on PFD.
    - WIDE ANGLE VIEW

  - ALWAYS NORMAL – The NORMAL view of the horizon on the PFD will always be displayed. The WIDE ON / OFF button is *not* present in the PFD > MODE menu.
  - ALWAYS WIDE – The WIDE view of the horizon on the PFD will always be displayed. The WIDE ON / OFF button is *not* present in the PFD > MODE menu.
  - SELECTABLE – The WIDE ON / OFF button is present in the PFD > MODE menu, allowing either WIDE or NORMAL views of the horizon on the PFD.
- BARO MISMATCH WARNING – Enables / disables a warning message when the current SkyView BARO setting and nearest valid ADS-B METARS report barometric pressure are significantly different.

EMS SETUP Menu

This menu is not accessible if a SV-EMS-220/221 is not installed. Reference the Autopilot Servo Calibration and Test Procedures Section of this guide for more information.

This menu contains menus and pages related to Engine Monitoring System page and data source (EMS module).

- ENGINE INFORMATION – Set important information regarding the engine in your aircraft such as engine type and horsepower. The user-entered information here is used to calculate quantities such as % power and special operating limitations.
- SENSOR INPUT MAPPING... – This wizard configures the individual multipurpose pins of the SV-EMS-220/221(s) to specific engine and environmental sensors. Reference the EMS Sensor Input Mapping Section of this guide for instructions on how to navigate and use this menu to map sensors.
- SCREEN LAYOUT EDITOR – This wizard configures the placement and style of the onscreen EMS gauges on EMS pages. Reference the EMS Screen Layout Editor Section of this guide for instructions on how to use this wizard.
- SENSOR SETUP – Configures the ranges, alarm conditions, and graphical display properties of sensors. Reference the EMS Sensor Setting Section of this guide for more information regarding sensor setup.
- DUAL EMS SETUP – If a second SV-EMS-220/221 is installed, configures how the pins (inputs) of the second SV-EMS-220/221 are used.
  (Note: Support for dual SV-EMS-220/221 modules is supported only in SkyView Classic; this feature is not available in SkyView SE or SkyView HDX (as of Software v15.0).
- SENSOR DEBUG DATA – Displays diagnostic / troubleshooting data for engine sensors. Also displays the version of the EMS Sensor Definitions file loaded on this SkyView display. See Appendix H: Sensor Debug Data for how to interpret the information displayed on this page.

MAP SETUP Menu

This menu contains menus and pages related to MAP page and data sources.

- TERRAIN WARNING COLORS – Sets whether Red and Yellow terrain warning are provided on the Map Page
- RED AND YELLOW START – When the above setting is set to "YES", these settings how far above or below the aircraft's current altitude the red and yellow colors persist.

AUTOPILOT SETUP Menu

This menu is not accessible until the autopilot servos in the system have been successfully calibrated and tested. Reference the Autopilot Servo Calibration and Test Procedures Section of this guide for more information.

This menu configures various aspects of the Dynon Avionics Autopilot system.

- STATUS – Displays diagnostic / troubleshooting information for the AP system.
- AUTOPILOT CONTROLS – Chooses the EXPERT or SIMPLIFIED mode. Note that the EXPERT mode must be selected for the Dynon Avionics SV-AP-PANEL to be active.
- ROLL AXIS – Roll axis setup and tuning parameters.
- PITCH AXIS – Pitch axis setup and tuning parameters.
- DISENGAGE BUTTON – Configure disengage button options such as hold to engage, enable broken line detect, and control wheel steering mode.
- FLIGHT DIRECTOR – Chooses the SINGLE CUE (INVERTED V) or DUAL CUE (CROSS BARS) mode of flight director to be displayed on the PFD.

TRANSPONDER SETUP Menu

This menu is not accessible unless a SV-XPNDR-261/262 is setup and configured. Reference the SV-XPNDR-261/262 Installation and Configuration Section of this guide for more information.

This menu contains options that are used to set up and configure the SV-XPNDR-261/262 module.

HARDWARE CALIBRATION Menu

This menu contains links to the following menus:

- ADAHRS CALIBRATION – Enter this menu to make altitude adjustments (e.g., baro and altitude offset) and access the compass and AOA calibration wizards.
- EMS CALIBRATION – Enter this menu for EMS sensor calibration. You will have options to calibrate fuel tanks and position potentiometers that have been mapped in the Sensor Input Mapping Wizard. Calibration wizards contain onscreen instructions.
- AP SERVO CALIBRATION – Enter this menu for autopilot servo calibration. Reference the AP Servo Installation, Configuration, and Calibration Section of this guide for more details.
- TRIM MOTOR CONFIGURATION – Enter this menu to configure one or two trim motors (connected to / powered by the Dynon Avionics SV-AP-PANEL 15-pin connector) for automatic trim control (Autopilot Auto-trim) during AP operation. Reference the Autopilot Auto-trim Section of the SV-AP-PANEL Installation section of this guide for more details.

Note that if an ADAHRS, EMS, or Servos are not present on the SkyView network, this menu will note the absence by displaying “(EMS NOT DETECTED)”, “(ADAHRS NOT DETECTED)”, or “(SERVOS NOT INSTALLED)”

Software Updates and File Operations

Dynon Avionics continually provides new functionality and capabilities to your SkyView system via Software updates. Use the resources mentioned in the Contact Information Section of this document to stay current on Software availability for SkyView.

Software updates and file operations are performed using a USB flash drive.

USB Flash Drive Considerations

A 4 GB or 8 GB USB flash drive is shipped with each SkyView display. There is nothing unique about this USB flash drive, including the data included on it.

Dynon Avionics recommends that you have a variety of USB flash drives available for various purposes, to dedicate to a specific task. For example, maintain a separate USB flash drive for EXPORT SETTINGS files; another for updating Software, and another for updating Aviation / Obstacle databases, etc. While a high resolution terrain database may require as much as 4 GB, a SkyView Software update may require only 50 MB. To display Seattle Avionics charts, a 16 GB USB flash drive is required. For most purposes, such as saving datalogs and typical updates, A 1 GB or 2 GB USB flash drive will be adequate.

Dynon Avionics recommends the use of “name brand” USB flash drives – “house brand” USB flash drives can sometimes fail prematurely, causing corrupted files or lost data.

If it is ever necessary to reformat a USB flash drive, the format that is compatible with SkyView is “FAT32”

In order to open the SYSTEM SOFTWARE Menu, you must have a USB flash drive plugged in to your SkyView display.

Updating the Software on a SkyView display automatically updates all of the modules connected on the same SkyView network, except for other SkyView displays. Each display must be updated individually.

Prior to updating Software, all SkyView Network devices must be powered on and online. If all previously configured SkyView Network devices are not detected, a warning screen will appear. The most common cause for this error that power is off to the autopilot servos (AP switch not ON). As soon as the offline module(s) resume communicating with SkyView, the Software update will automatically proceed. (SkyView Network devices do not include SV-ADSB-470/472/472 and SV-XPNDR-261/262 – those devices are connected via serial ports).

How to Update Software

1. Download the latest SkyView Software file from http://downloads.dynonavionics.com.
2. Copy the Software file onto your USB flash drive. *The Software file must be in the root directory of the drive in order to be recognizable by the SkyView display.*
3. Insert the USB flash drive into one of the SkyView display's USB ports.
4. SETUP MENU > SYSTEM SOFTWARE > UPGRADE SYSTEM SOFTWARE…) > (one more right click).

If some SkyView Network modules (or other displays) are not powered on or connected to the SkyView network, you will see a screen that is similar to Figure 17 below.

Figure 17 – Some SkyView Network devices not online, cannot update

If you see a screen similar to the one in Figure 17 above, power on or reconnect all SkyView Network devices. This error is typically caused by Autopilot servos or SV-COM-C25 radio not being powered on.

5. Update the Software on the unit by pressing UPDATE or press CANCEL to return to the SYSTEM SOFTWARE Menu.
6. To aid in troubleshooting, during the Software update process, your SkyView system's previous configuration files are automatically written to the USB flash drive in a subdirectory (folder) called "settings_archive": TAILNUMBER_SNXXXX_SOFTWAREVERSION_SENSORS_SW_UPGRADE.sfg

TAILNUMBER_SNXXXX_SOFTWAREVERSION_SW_UPGRADE.sfg

How to Export System Settings

This operation creates a set of files on the USB flash drive that contain display settings, equipment settings, and important calibration information. All of the filenames contain the tail number and the Software version.

1. Insert the USB flash drive into one of the display's USB sockets.
2. Go to the Export Settings Wizard (SETUP MENU > SYSTEM SOFTWARE > EXPORT SETTINGS…).
3. Create a file name for the settings file.
4. Save the settings file onto the flash drive by pressing EXPORT or press CANCEL to return to the SYSTEM SOFTWARE menu.

How to Load and Delete Files

1. Download file from http://downloads.dynonavionics.com such as terrain or EMS files or use another source for the SkyView file.
2. Copy the file onto your USB flash drive. *The file must be in the root directory of the drive in order to be recognizable by the display.*
3. Insert the USB flash drive into one of the display's USB sockets.
4. Go to the Load Files Wizard (SETUP MENU > SYSTEM SOFTWARE > LOAD FILES…).
5. Select a file and press:
    a. LOAD to load the file onto the system.
    b. CANCEL to return to the SYSTEM SOFTWARE menu.
    c. REMOVE to delete the file from the USB flash drive.

How to Export Data Logs and Waypoints

EXPORT DATA LOGS

Data logging, and how to export datalogs is discussed in depth in Appendix F: User Data Logs.

EXPORT USER WAYPOINTS

This option exports all of the User Waypoints that are currently stored in your SkyView system.

EXPORT DYNON DIAGNOSTIC FILE

This specialized data log can only be interpreted by Dynon Avionics Engineers; there is no data in it that can be interpreted by SkyView pilots. Dynon Avionics Technical Support may request this log in the course of troubleshooting, especially for issues related to AP performance. Note that this log is very big – over 500 MB – and takes minutes to save to a USB flash drive. Unless directed to export this log by Dynon Avionics, there is no reason to do so. This file is too large to send in an email message.

If you have more than one SkyView display in your system, you may be requested to save the Dynon Avionics Diagnostic File from each of your SkyView displays as each display can sometimes contain different diagnostic data. If you save the Dynon Avionics Diagnostic File

from multiple displays onto the same USB flash drive, use the 33-character name field to distinguish the two files, such as naming one “LEFT” and the other one “RIGHT”.

If Dynon Avionics Technical Support has requested that you send a Dynon Diagnostic File, go to http://www.dynonavionics.com/docs/upload.html to transmit the file to Dynon Avionics. Please reference any previous communications with Dynon Avionics Technical Support such as Case number, RMA number, etc.

4. SkyView Display Installation and Configuration

This section contains information and diagrams that specifically apply to installation of SkyView Classic, SkyView SE, and SkyView HDX displays. After reading this section, you should be able to determine how to prepare a panel for display installation, how to mount a display, how to make all necessary electrical connections, and also how to configure a display.

Figure 18 is a high-level overview of a suggested installation and configuration procedure for SkyView displays and their associated components.

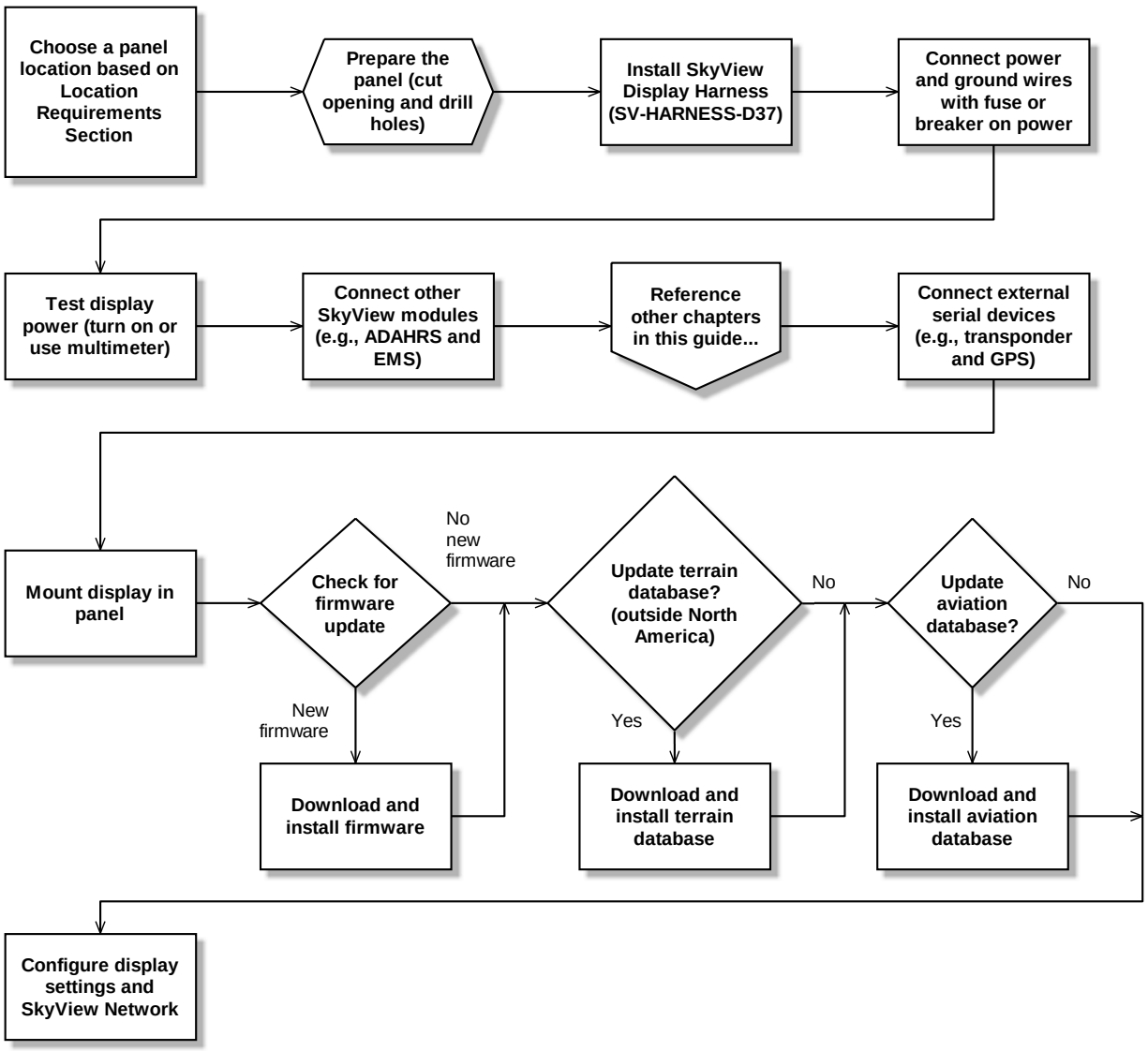

Figure 18 – Suggested SkyView Display Installation Procedure

Physical Installation

Display	Panel Cutout	Bezel Outline
SV-D600	6.97” x 5.35” (177.038mm x 135.890mm)	7.636” x 5.512” (193.954mm x 140.005mm)
SV-D700		
SV-D900	9.68” x 6.90” (245.872mm x 175.260mm)	10.320” x 7.064” (262.128mm x 179.426mm)
SV-D1000		
SV-D1000T		
SV-HDX800	6.97” x 5.35” (177.04mm x 135.89mm)	7.64” x 5.59” (194.0 mm x 142.0mm)
SV-HDX1100	9.68” x 6.28” (245.87mm x 159.50mm)	20.31” x 7.07” (262mm x 179.5mm)

Table 11 – SkyView Displays Installation Dimensions Quick Overview

If you are converting your panel from a Dynon Avionics EFIS-D100, EMS-D120, or FlightDEK-D180, note that the SV-D600, SV-D700, and SV-HDX800 displays have a slightly larger panel cutout than those products and the existing panel cutout for those products must be slightly enlarged.

Location Requirements for SkyView Displays

Observe the following guidelines when choosing a location for a SkyView display:

- SkyView displays require about 2.4” (61mm) of free space behind the panel, depending on mounting surface thickness.
- Consider the ease, or difficulty of disconnecting multiple connectors when removing a SkyView display from the panel. Plan for either:
    - Providing sufficient slack in the cables so that the SkyView display can be removed from the panel and *then* the cables disconnected, or…
    - Disconnecting (and reconnecting) the cables from behind the panel prior to removing the SkyView display from the panel.
- The SkyView Display Harness (SV-HARNESS-D37) extends about 3” (76mm) from the back of the display.
- Add a 1.0” (25.4 mm), minimum, beyond the physically required volume for the SkyView display’s heat sinks and fans to operate.
- Avoid placing the display near heater vents or any source of extremely hot air.

While SkyView displays do not (normally) require a forced cooling air, if the aircraft is to be operated in hot climates, the builder should ensure that the stated operating temperature range for SkyView displays is not exceeded.

- The display should be easily viewable without any obstructions.
- SkyView Displays have no internal inertial sensors and *do not need to be mounted in the same orientation as the ADAHRS or other modules*.

- Displays only support a landscape viewing orientation; do not mount in portrait orientation.

There are a total of three USB connectors (ports) on a SkyView display. One USB port is included on a cable as part of the Dynon Avionics SV-HARNESS-D37. The other two USB ports are on the rear of the SkyView display (see Figure 21 – SV-D600 and SV-D700 Dimensions and Figure 23 – SV-D900, SV-D1000 and SV-D1000T Dimensions).

The two USB ports on the rear of the SkyView display are used for:

- SkyView Wi-Fi Adapter, P/N 201211-000
- SkyView Video Input Adapter, P/N 102211-000
- (Third party) Panel mount USB extension cable

If you will not be installing both of these options, you may want to install a "panel mount USB extension cable" as shown in Figure 19 at right (excerpted from the Advanced Flight Systems [AFS] Quick Panel System). A USB connector installed on the panel provides convenient access to a USB port for your SkyView display, used updating Software, updating databases, and displaying electronic charts (for which the USB flash drive is semi-permanently connected).

Figure 19
Panel Mount USB

Thus if panel space allows, we recommend that you install at least one panel mount USB connector for each SkyView display. Suitable panel mount USB cables can be found by searching on the Internet for "panel mount USB".

Figure 21 and Figure 23 on the following pages show the mechanical dimensions of the SkyView displays. Use the dimensions (in inches) found in the appropriate diagram to plan for the space required by the display.

To mount a SkyView display, cut an appropriately sized rectangular opening in your panel, drill out the mounting holes, and use the included mounting screws to fasten the display to the panel.

SkyView Classic and SkyView SE displays are shipped with #6-32 hex-drive round head fasteners. Fasteners are 5/8" in length and require a 5/64" hex drive tool. Dynon Avionics recommends fastening the included mounting screws to nut plates installed behind the panel. If access behind the panel allows, standard #6-32 lock nuts or nuts with lock washers can be used. *Do not rivet SkyView displays to the panel as this will hinder future removal if necessary.*

SkyView Classic and SkyView SE Display / Panel Unit Screws

A package of 30 black button head #6-32 5/64" hex screws that are included with SkyView Classic and SkyView SE displays and SkyView panel units can be purchased from Dynon Avionics – P/N 102487-000. Note that these screws are not intended for use with SkyView HDX displays.

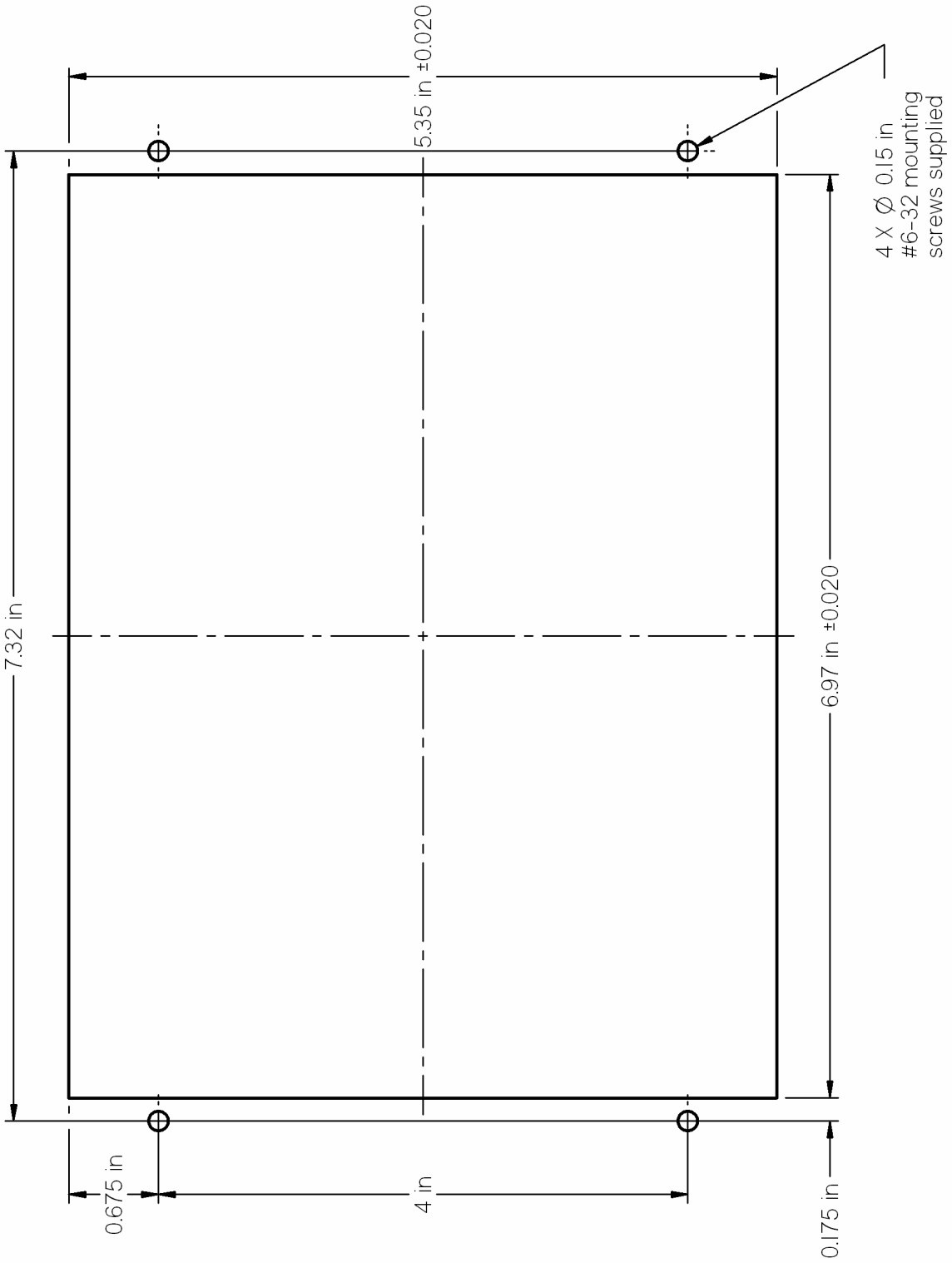

Figure 20 – SV-D600 and SV-D700 Panel Cutout and Mounting Hole Dimensions - NOT ACTUAL SIZE

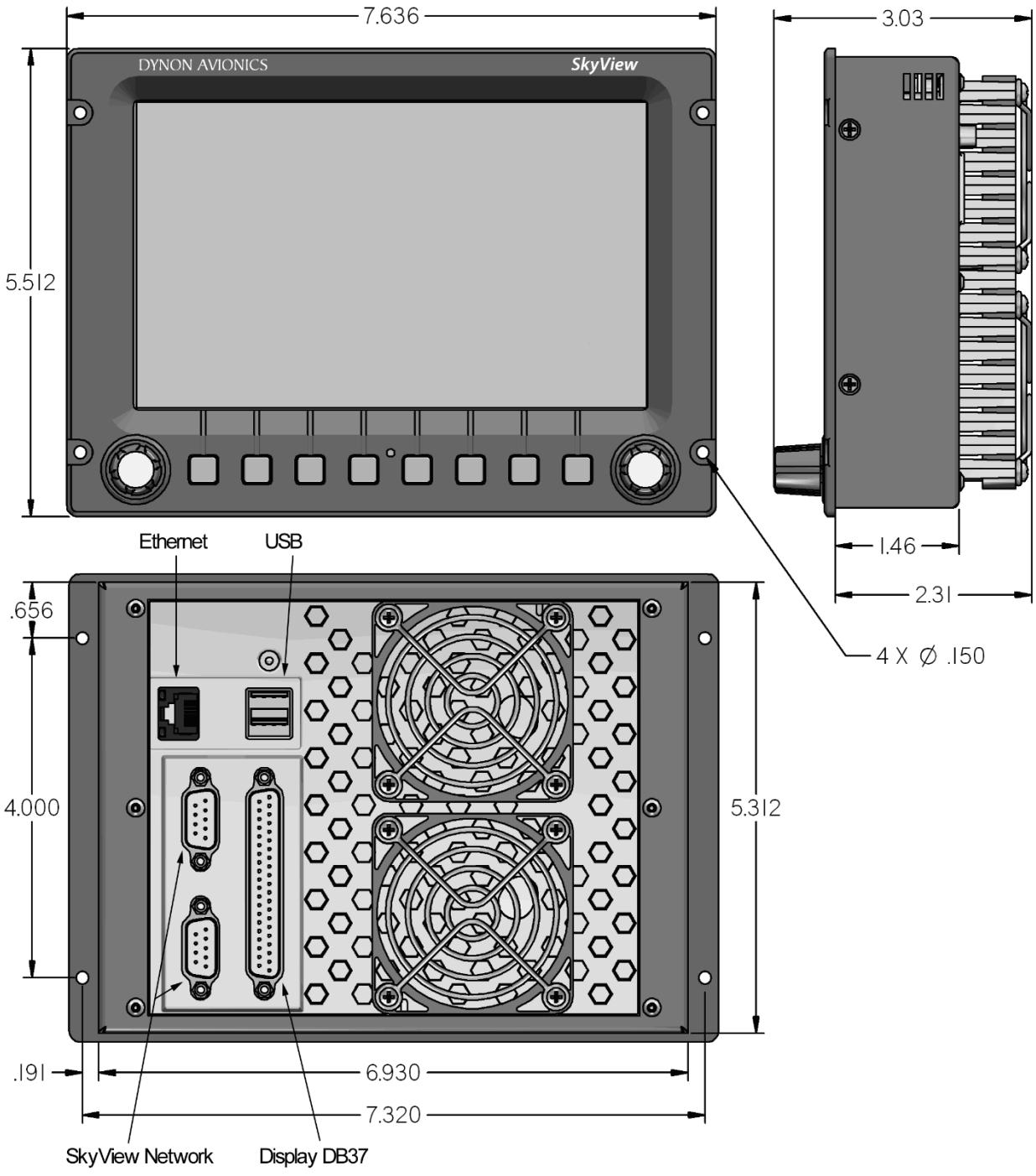

Figure 21 – SV-D600 and SV-D700 Dimensions

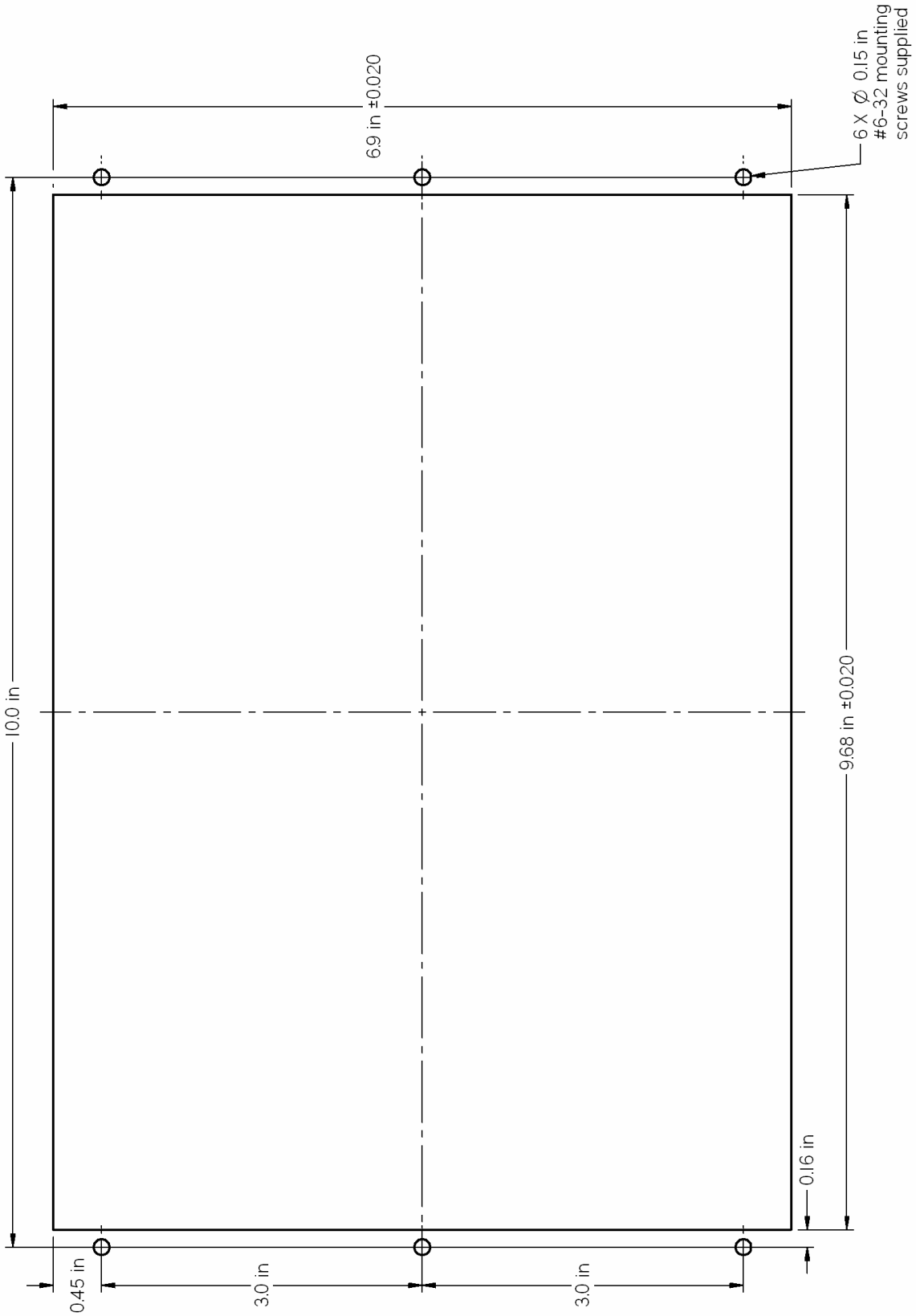

Figure 22 – SV-D900, SV-D1000 and SV-D1000T Panel Cutout and Mounting Hole Dimensions – NOT ACTUAL SIZE

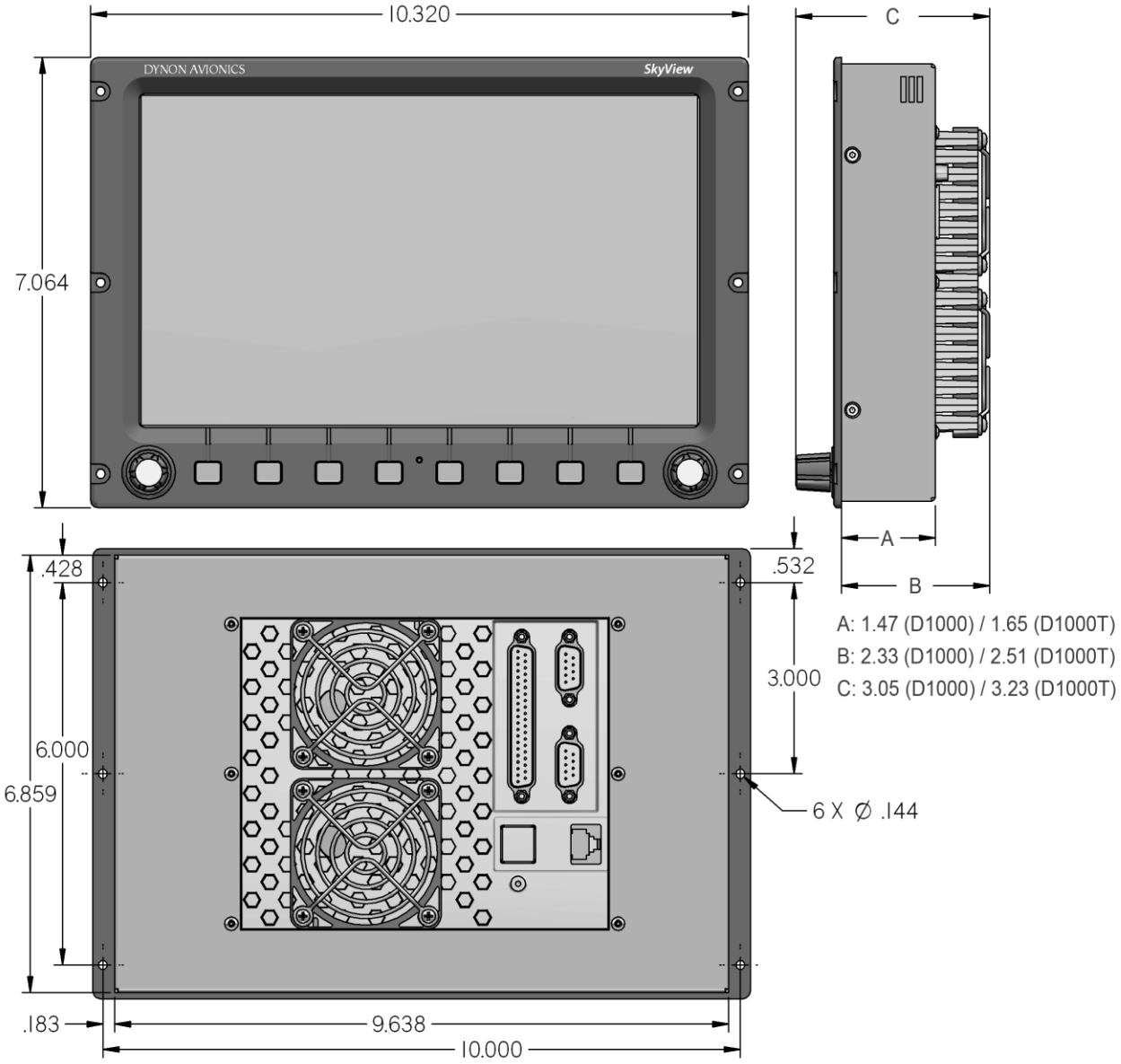

Figure 23 – SV-D900, SV-D1000 and SV-D1000T Dimensions

For SV-D1000 units S/N 8082 and earlier, the depth dimension of the enclosure (Dimension **A:** above) is 1.47 inches as stated above.

For SV-D900 units (all S/Ns) and SV-D1000 units S/N 8083 and later, and the depth dimension of the enclosure (Dimension **A:** above) is 1.65 inches (same enclosure as the SV-D1000T).

All *other* dimensions for all SV-D1000s, all S/Ns, are unaffected.

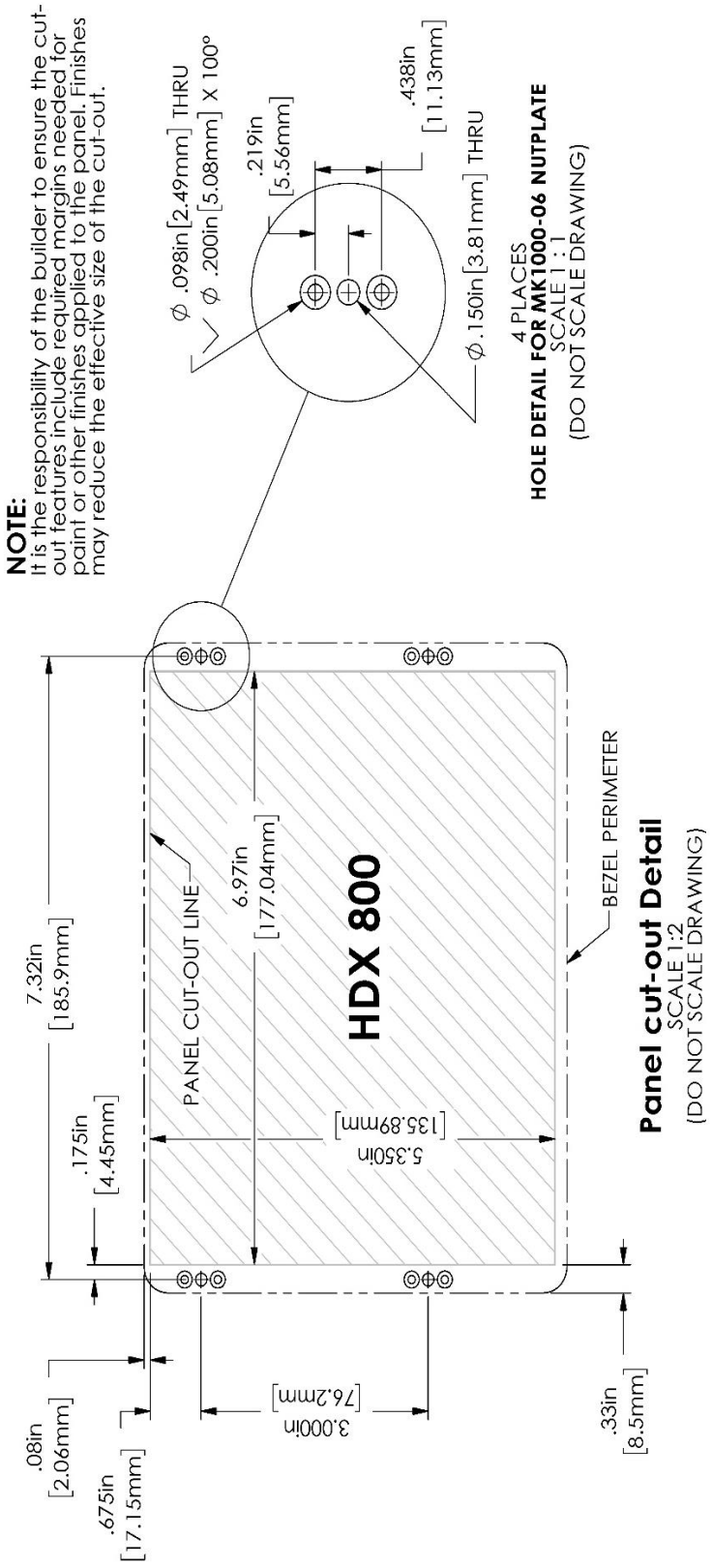

Figure 24 – Panel Cutout and Mounting Hole Dimensions – NOT ACTUAL SIZE

Figure 25 – SV-HDX800 Front Dimensions

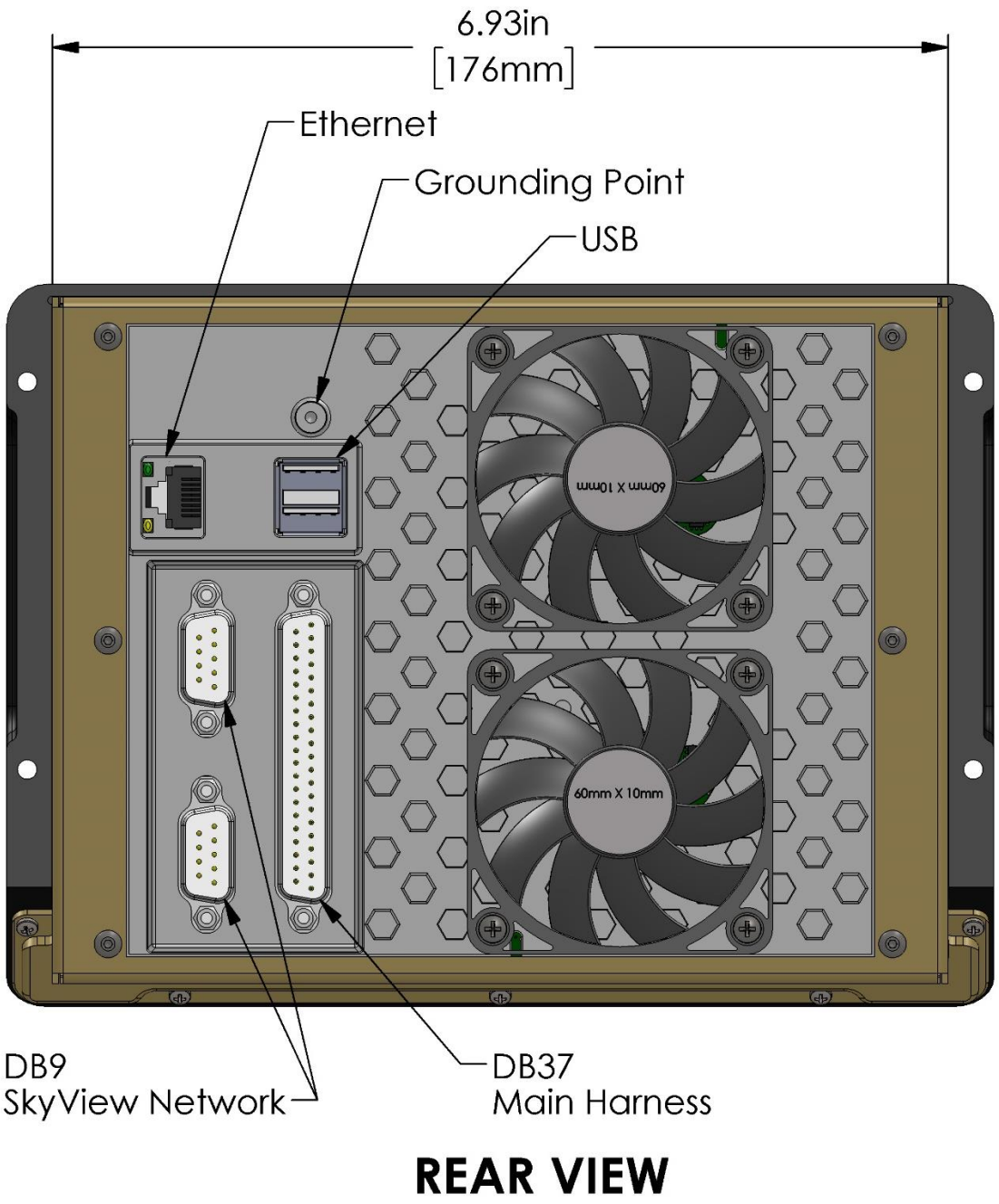

Figure 26 – SV-HDX800 Rear Dimensions

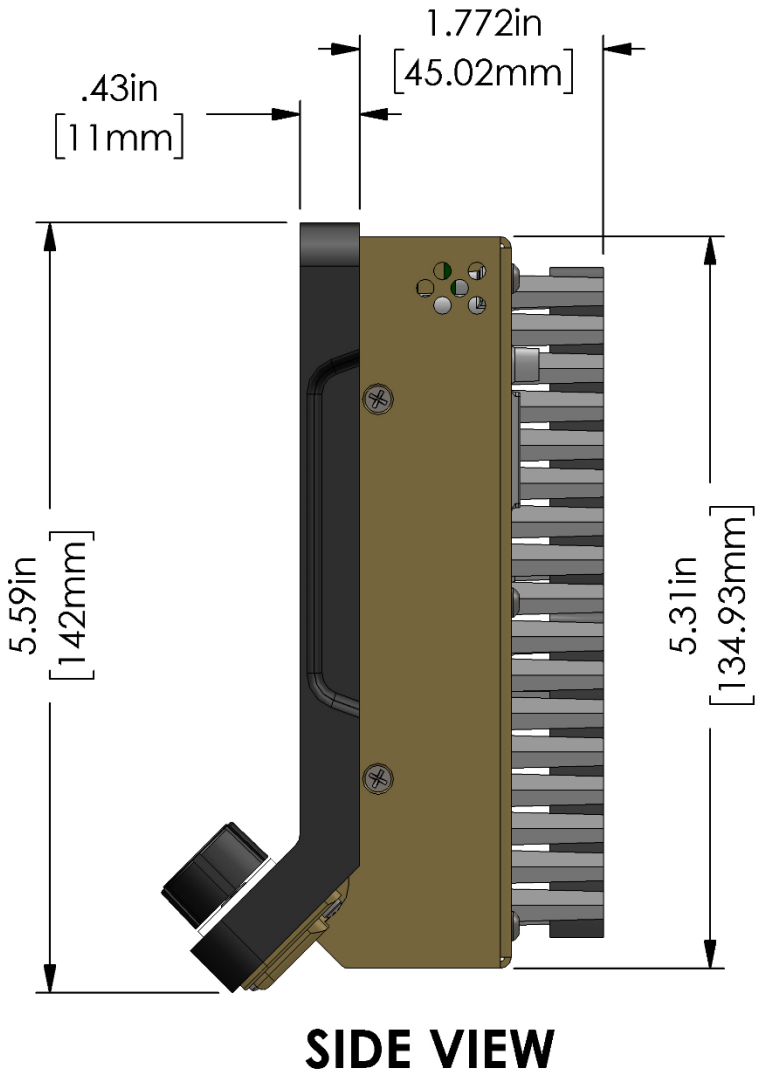

Figure 27 – SV-HDX800 Side Dimensions

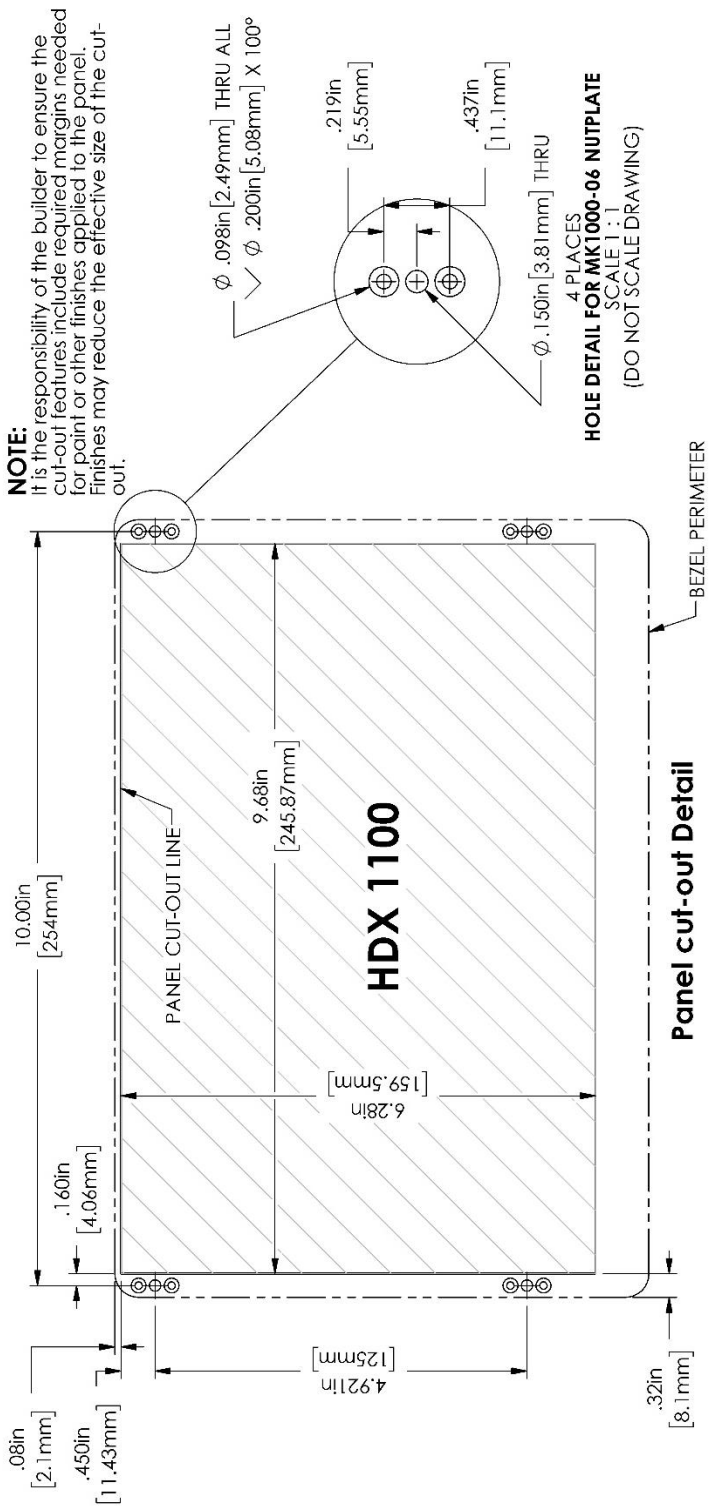

Figure 28 – SV-HDX1100 Panel Cutout and Mounting Hole Dimensions - NOT ACTUAL SIZE

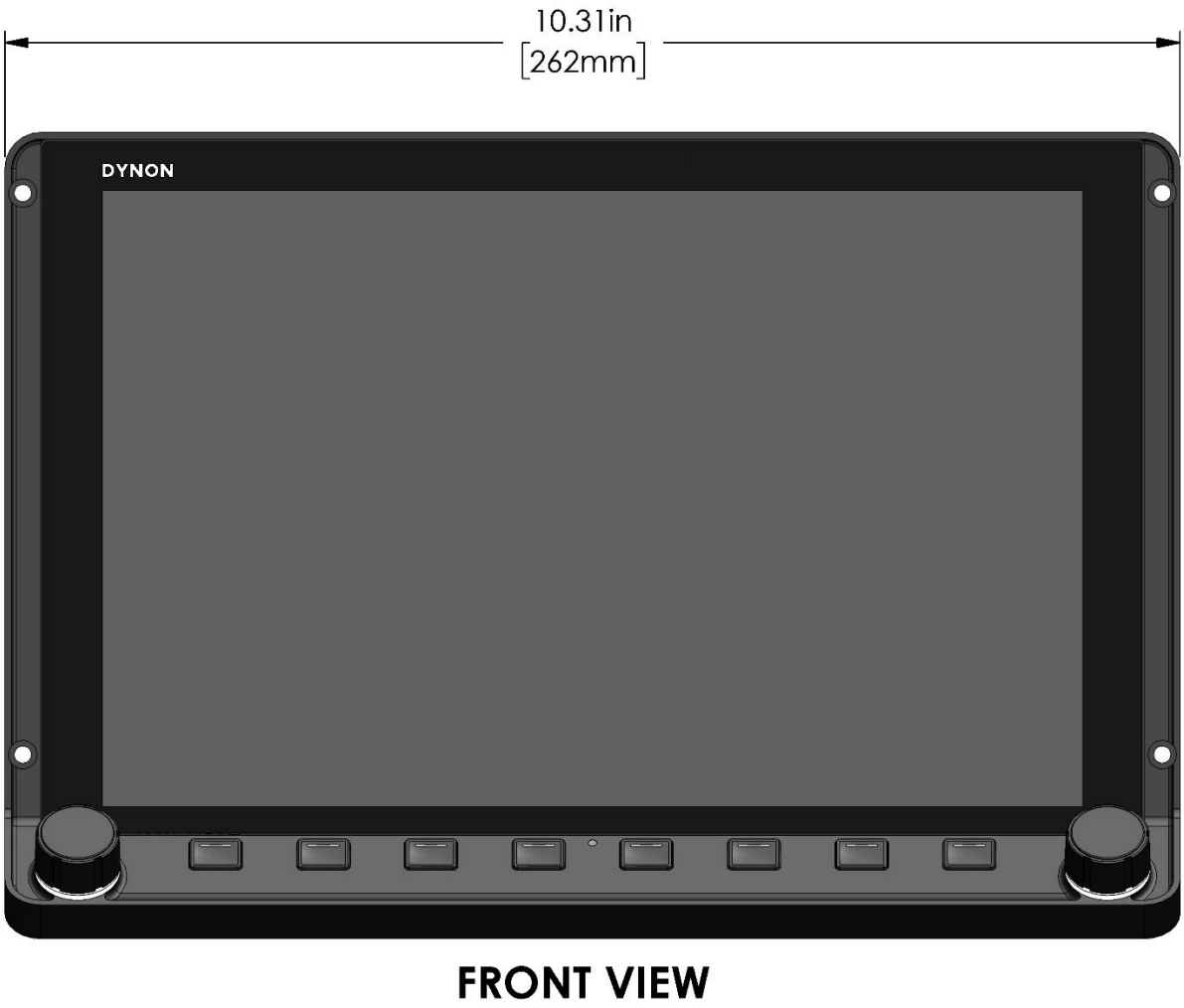

Figure 29 – SV-HDX1100 Front Dimensions

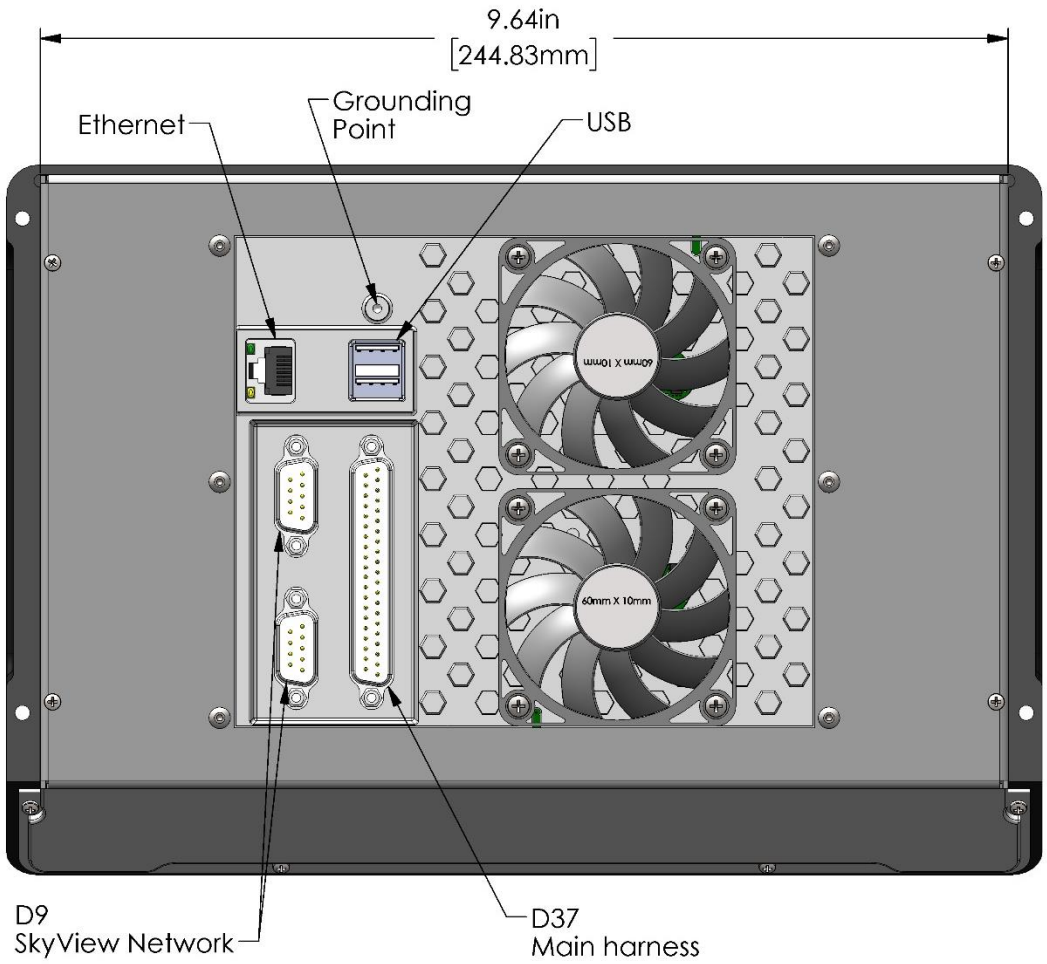

Figure 30 – SV-HDX1100 Rear Dimensions

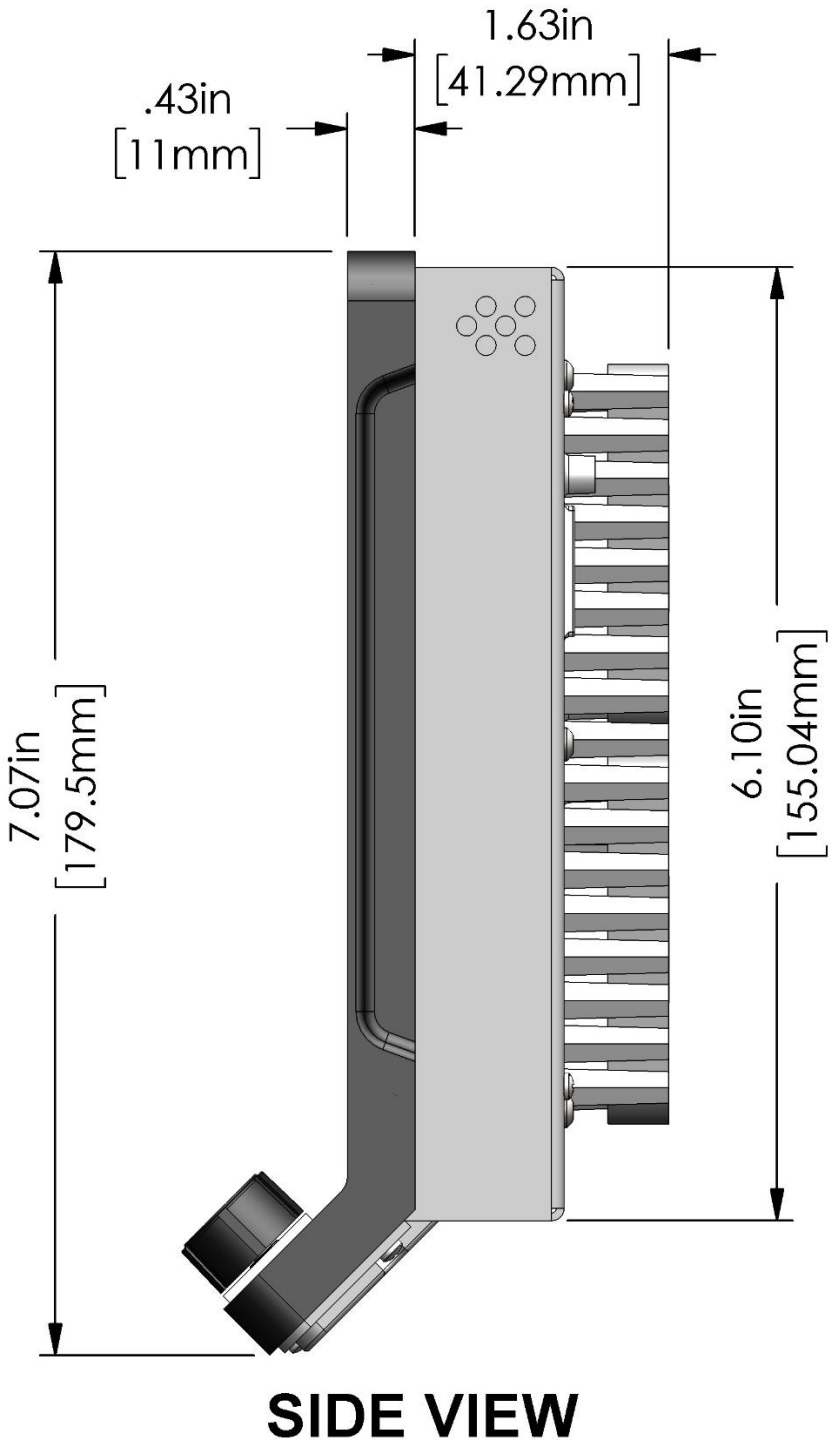

Figure 31 – SV-HDX1100 Side Dimensions

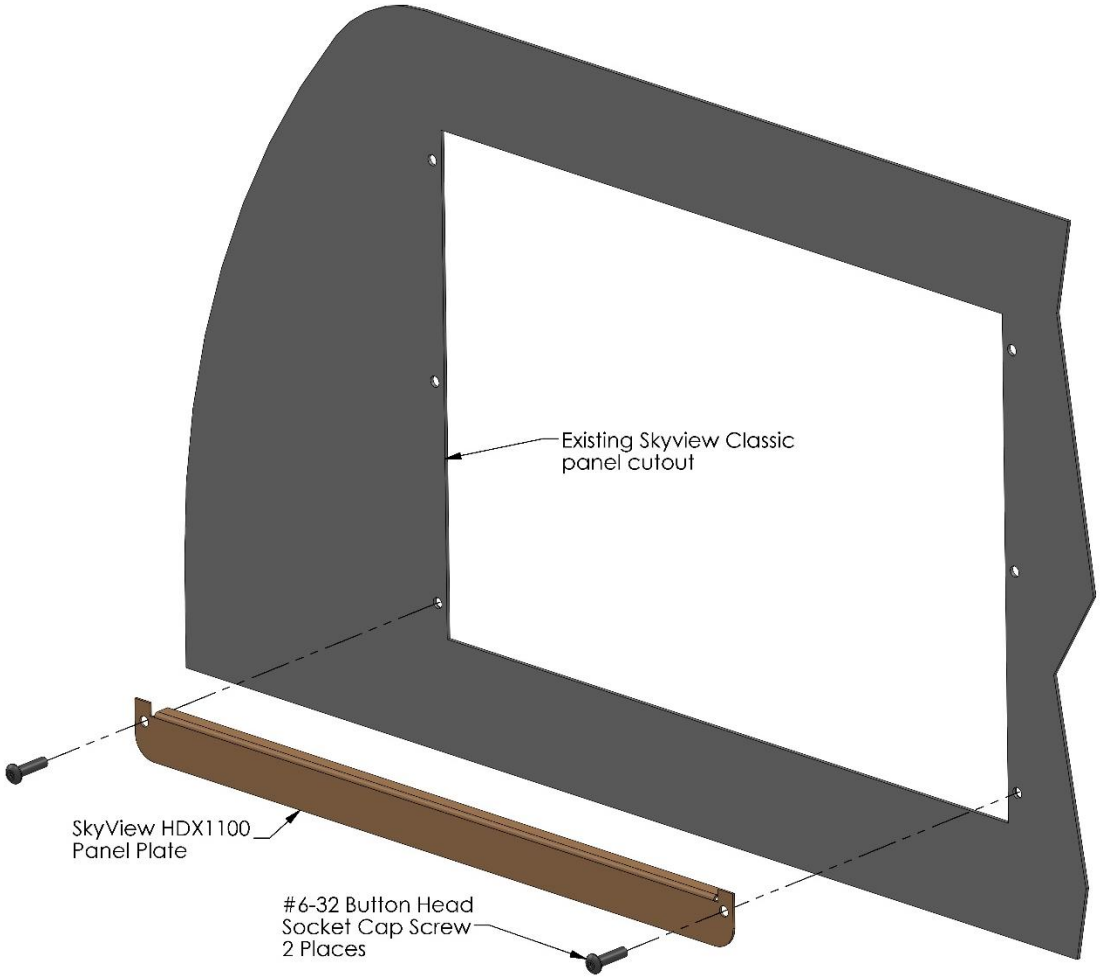

Figure 32 – HDX1100 Panel Plate

If the SkyView SV-HDX1100 display will be installed into a panel with existing (larger) cutouts and screw holes for a SkyView SV-D900, SkyView SV-D1000, or SkyView SV-D1000 Touch display (initial installation or upgrade), a "filler" Panel Plate, and two SkyView Classic / Panel Unit (black button-head) screws are included with each SkyView SV-HDX1100.

As Figure 32 illustrates, the Panel Plate should be installed from the front of the panel, at the bottom of the panel cutout where it will be largely covered by the "chin" of the SV-HDX1100.

The Panel Plate is included with SV-HDX1100 units shipped during the first year of production of the SV-HDX1100 (approximately through year end 2017). If a Panel Plate was not included with your SV-HDX1100, you can request one from Dynon Avionics Sales – P/N 102897-000.

Electrical Installation

Use this section in conjunction with the information contained in Appendix C: Wiring and Electrical Connections *(notably Figure 223 on page 23-9).* The wires and wire colors in this section refer to the wires on the included SkyView Display Harness (SV-HARNESS-D37).

Some wires that are used in SkyView harnesses are identified with secondary color stripes. Exposing these striped wires to solvents or abrasives can cause the stripe color to wear off. Handle these wires with care.

Power Input

SkyView displays have a primary power input that is compatible with 12 volt and 24 volt electrical systems (10 to 30 volts DC). There are two unterminated solid red primary power input wires (to reduce current loading in each wire—these are not for redundancy and both must be connected to the same power source) and two unterminated solid black primary ground wires.

Ensure that there is an appropriately rated circuit breaker or replaceable fuse on the primary power input. Reference the Power Section of the System Planning Section for more information.

Grounding

Ensure that all external devices that interface with SkyView have a common ground with SkyView. If a device does not share ground with SkyView, it may not communicate properly.

Airplane Master Contactor / Relay Considerations

If your aircraft is equipped with a master contactor or a relay that is operated by the master switch, it is imperative that the coil of the contactor or relay is protected by a diode to reduce the voltage spike seen when the contactor is turned off. Without this diode, the aircraft system can see spikes above 100V, which can damage Dynon Avionics equipment and other avionics.

While some contactors have this diode internally, many do not. Please verify the existence of this diode before operating your Dynon Avionics equipment. Any diode that is rated for more than 1A and more than 50V is suitable. Vans Aircraft part number ES DIODE MASTER is also a suitable option.

SV-BAT-320 Connection and Operation Rules

SkyView displays have the option of an external backup battery - SV-BAT-320. The SV-HARNESS-D37 harness has a connector that mates with the connector on the SV-BAT-320. Simply connecting the display to the battery enables the use of the SV-BAT-320; no additional configuration is required.

In the event of an electrical failure that causes SkyView to run on the SV-BAT-320, the SV-BAT-320 supplies power to the SkyView display it is connected to, along with any devices powered

by the SkyView display – see System Planning, Power . A fully charged SV-BAT-320 can keep most SkyView systems operating for at least 60 minutes. The SV-BAT-320 does not supply (backup) power to the following SkyView system devices:

- Autopilot servos
- Heated AOA/Pitot Probe
- SV-ADSB-470/472/472
- SV-COM-425 / SV-COM-X25/X83
- SV-XPNDR-261/262
- Trim control servos controlled / powered through the SV-AP-PANEL
- Any non-Dynon Avionics device

SkyView displays are only compatible with a Dynon Avionics SV-BAT-320 Backup Battery. Do not connect a lead-acid battery or any other battery to the connection reserved for the SV-BAT-320 as the charging algorithm and charging circuitry, voltages, etc. are optimized for the SV-BAT-320. Connecting any other battery may have detrimental consequences. Damage caused by connecting such a battery will not be repaired under warranty.

See the Non-Dynon Avionics Wire Harness Considerations section for important specifications that must be adhered to for the SV-BAT-320 to charge properly when used with a non-Dynon Avionics harness.

SkyView Network Connectors

The two D9 connectors on the back of a SkyView display are SkyView network connectors. They have identical pinouts and are electrically connected inside the display (i.e., they are completely interchangeable). Installers may use either connector or both connectors in SkyView installations. Reference Table 117 on page 23-10 for SkyView Network Connector pinout information.

Note that these connectors are not "RS-232" Serial Port connectors.

Network Setup and Status

Once all SkyView modules are connected in a network, either in a bench top test or permanent installation, turn the display(s) on. You will see the display boot up and the status LEDs on the modules light up.

A tail number on the Aircraft Information Page (SETUP MENU > SYSTEM SETUP > AIRCRAFT INFORMATION) is required for network configuration.

If you have more than one display in your SkyView system, the tail number only needs to be set on the display that you initially perform the Network Configuration on. At network configuration time, all other displays that are set to the default tail

number of DYNON will automatically have their settings and tail number synchronized with the display the configuration is performed from. After configuration, all displays' tail numbers and settings will be synchronized, and further setup tasks can be performed from any display.

When you first power up your SkyView display, it will look similar to the screen below (SkyView HDX and SkyView SE displays will be slightly different). *This is normal* – you have not yet performed a SkyView Network Configuration for the SkyView display(s) to recognize your ADAHRS, EMS, and other SkyView Network modules.

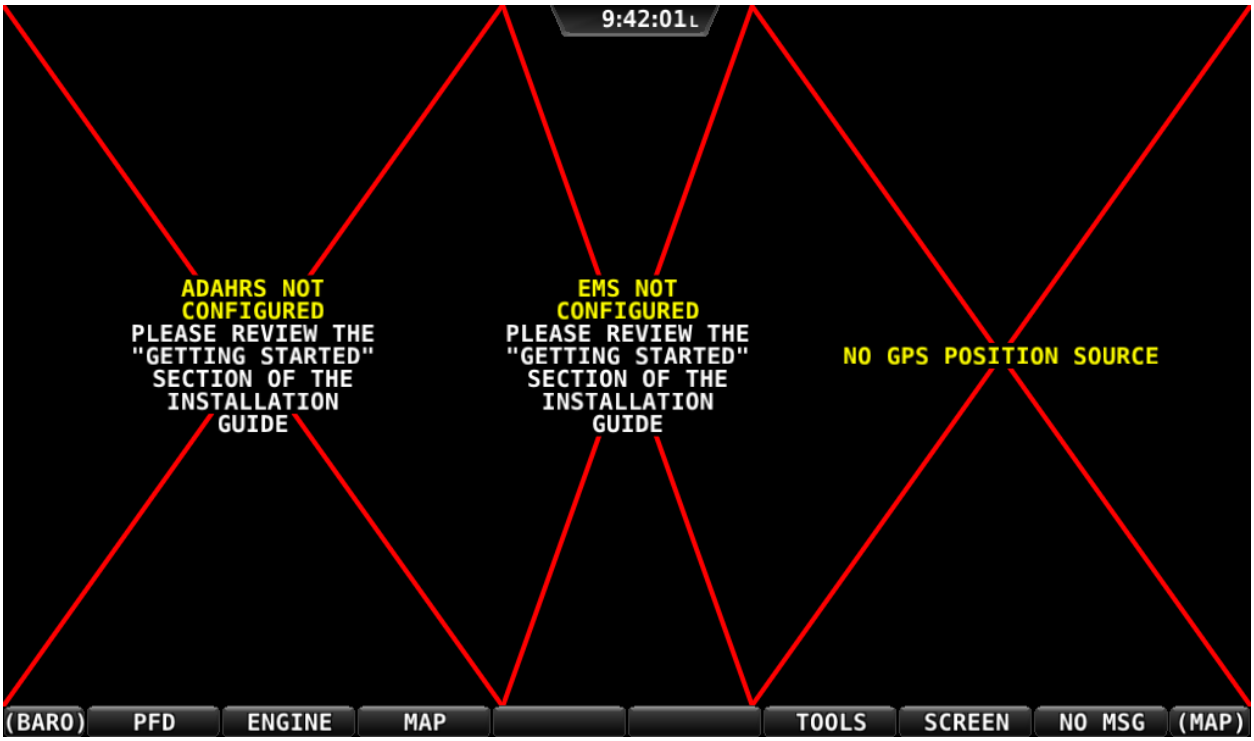

Figure 33 – New SkyView Classic display, SkyView Network not yet configured

Use the following procedure to configure a SkyView network:

1. Push buttons 7+8 to access the SETUP MENU.
2. *Navigate to the CONFIGURE… Page* (SETUP MENU > SYSTEM SETUP > SKYVIEW NETWORK SETUP > CONFIGURE…).
3. *Press DETECT.* A successful network configuration yields the screen in Figure 34 (depending on the units installed, your SkyView system's network devices will look different and display different Software versions).
4. *Press FINISH* to close the screen and return to the Network Setup Menu.

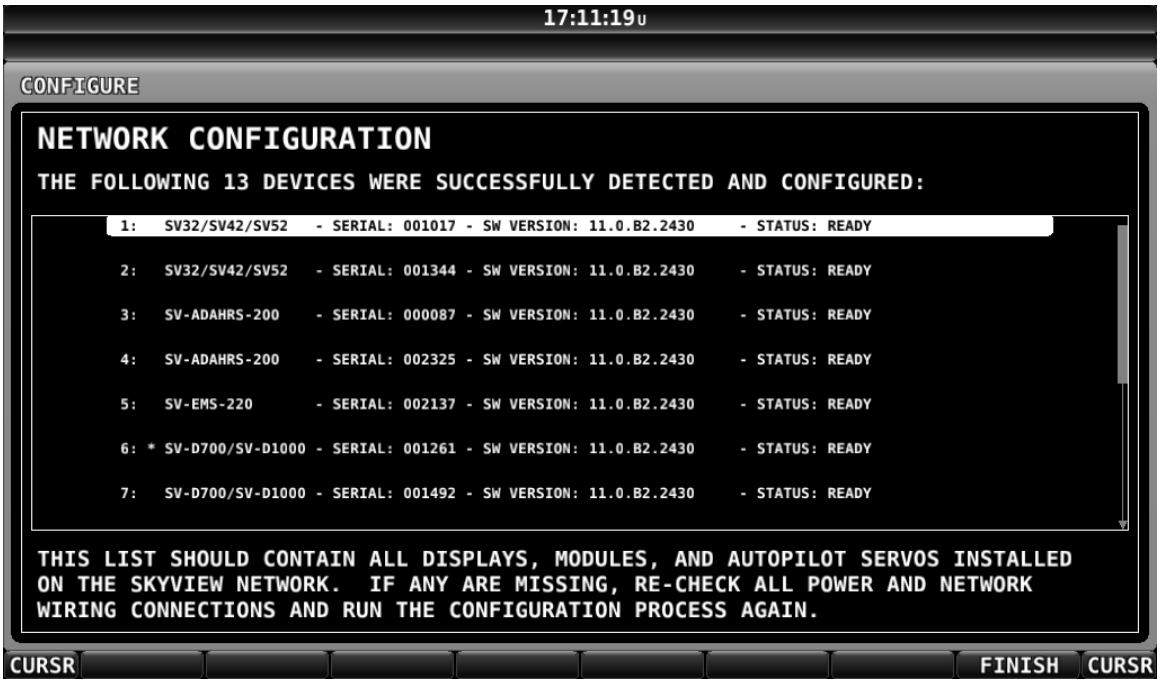

Figure 34 – Successful SkyView Network Configuration Screen

If the SkyView network is successfully configured, but Software versions on equipment are not synchronized, you will see a screen that is similar to Figure 35.

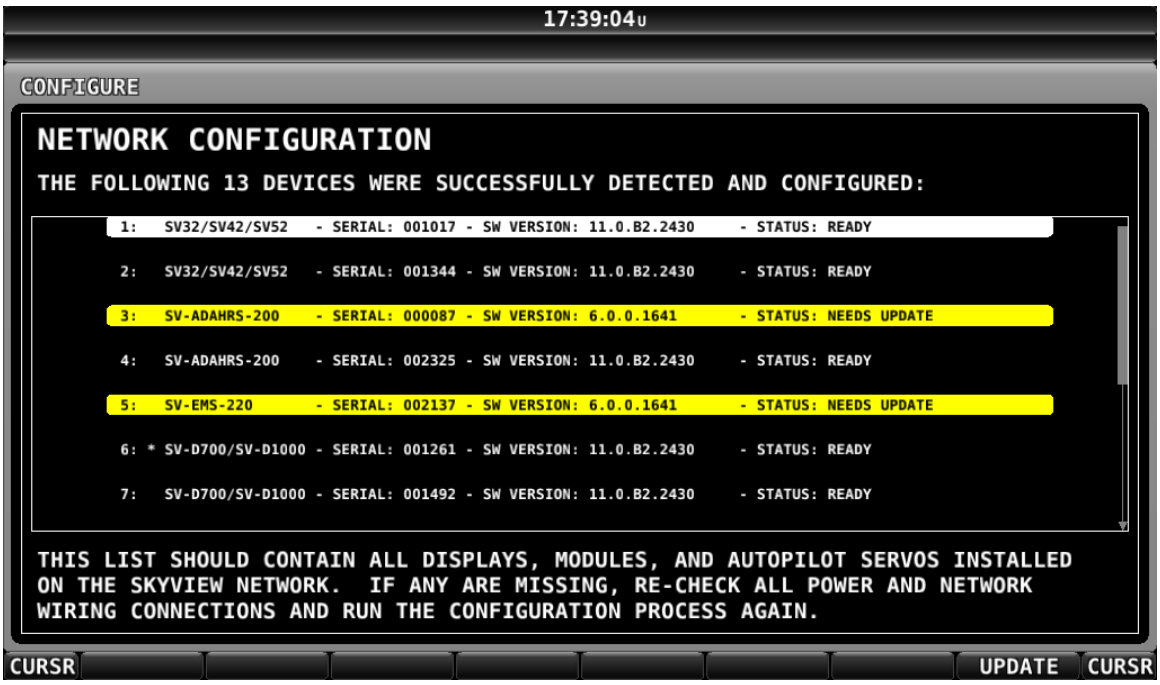

Figure 35 – SkyView Network Configuration with Software Update

If you see a screen similar to the one in Figure 35, simply press the button labeled UPDATE to update the Software running on the equipment in the SkyView network.

To check on SkyView network status, enter the NETWORK STATUS… Menu in the Network Setup Menu (SETUP MENU > SYSTEM SETUP > SKYVIEW NETWORK SETUP > NETWORK STATUS…).

The Network Status Page shows all displays, modules, servos, and other Dynon Avionics products installed on the SkyView network via the D9 SkyView Network connectors. This includes the following devices: SV-D700 / SV-D1000 / SV-D1000T displays (SkyView) or SV-D600 / SV-D900 displays (SkyView SE), SV-ADAHRS-200/201 modules, SV-EMS-220/221 modules, SV-ARINC-429 modules *(not supported in SkyView SE)*, SV-COM-PANEL for SV-COM-C25 and SV-COM-X25/X83 COM radios, SV-AP-PANEL *(not supported in SkyView SE)* / SV-KNOB-PANEL control panels, and Dynon Avionics Autopilot Servos. It does NOT include any non-Dynon Avionics devices or any of the following Dynon Avionics devices that connect via a method other than SkyView Network: SV-XPNDR-261/262 transponders, SV-ADSB-470/472/472 ADS-B receiver *(not supported in SkyView SE)*, SV-GPS-250/2020 GPS receiver, OAT(s), or individual engine sensors.

SkyView Network has redundancy and error detection features which allow it to detect and annunciate module and SkyView Network wiring faults. In the event that SkyView reports a problem with an ADAHRS, EMS module, autopilot servo, or a problem with the “standby network”, this NETWORK STATUS page will provide more information about the nature of the problem.

Ethernet Connection

SkyView systems containing more than one display should ideally have their Ethernet ports connected together for best operation. See the SkyView System Construction section in this manual for further information about Ethernet.

Internal Time Keeping

Zulu/GMT time is initially obtained from a GPS source. Time is displayed as “--:--:--“until a GPS fix is received. When a display is turned off, a connected SV-BAT-320 backup battery enables the display to retain accurate time. To display time, a SkyView display that is not connected to a SV-BAT-320 must obtain a GPS fix each time it is powered on.

RS-232 Serial Devices

RS-232 serial communication to non-Dynon Avionics devices and interfacing of other devices in general can be involved and detailed. This installation guide is intended to provide general installation advice for the most common devices and situations.

A SkyView display includes five general purpose RS-232 serial ports available for use with compatible equipment. Serial port transmit (TX) and receive (RX) wire sets are twisted together. Connected RS-232 serial devices must share a common power ground with the SkyView display(s).

Dynon Avionics devices that use RS-232 serial ports for communication include the SV-GPS-250/2020, SV-XPNDR-261 and-262, and SV-ADSB-470/472/472. Devices from other manufacturers that are commonly used with SkyView include transponders (with serial port inputs), NAV radios such as Garmin SL30, COM radios such as Garmin SL40, GPS devices such as the Garmin X96 series, Vertical Power VP-X, and Emergency Location Transmitters (ELTs). Reference the appropriate sections of this manual for detailed instructions for installing the SV-GPS-250/2020, SV-XPNDR-261 and -262, SV-ADSB-470/472/472, and Vertical Power VP-X. Additionally, an external serial device such as a PC or external serial data logger can be connected and used to record real-time ADAHRS and EMS data that can be output by SkyView.

Serial port 5 is recommended for the SV-GPS-250/2020 connection. Its wire bundle includes serial transmit, receive, ground, and power, and its wires are color-matched to the wire colors on the SV-GPS-250/2020.

Transponders with serial altitude input can be directly connected to a display. To interface a SkyView display to a gray code transponder, the use of a Dynon Avionics Encoder Serial-to-Gray Code Converter Module (Dynon Avionics P/N 100362-000) is required. Reference the Encoder Serial-to-Gray Code Converter Section of this guide for more information.

If you have more than one SkyView display, each external serial device's serial TX wire needs to be connected to each screen so that it can send information to each display individually. Information that is received via serial connection is not automatically shared between multiple SkyView displays in an aircraft. Additionally, if the serial device you are connecting to your SkyView system can receive information from SkyView, that device's RX wire must be connected to all SkyView displays as well. SkyView has special hardware to allow multiple TX lines to be connected together for redundancy. It is required that all connections to/from a particular serial device be connected to the same SkyView display serial port on every display in the SkyView system.

The instructions above specify that both the TX and RX lines from external serial devices be connected to multiple screens in parallel. SkyView systems that were installed before SkyView Software v2.6 may require wiring changes to accommodate this. Specifically, if your system has multiple SkyView displays and your transponder is utilizing the serial altitude encoder output, the transponder would have only been connected to one screen when you configured your SkyView system. As of v2.6, transponders (and other serial devices) must be connected to *all* SkyView displays to work correctly.

It is the installer's responsibility to determine how to connect external serial devices to the display using the included wire harness. Installers should reference serial device documentation for serial port specifications. The basic order for installing an external serial device is as follows.

1. Specify a serial port for the device.
2. Make the serial port electrical connection. If you have more than one SkyView display, make the same connection to all SkyView displays.

3. Configure the serial port (under SETUP MENU > SYSTEM SETUP > SERIAL PORT SETUP) according to the device's documentation.
4. When serial port configuration is complete, perform a final check by doing the following:
    a. Power down all displays except #1. Verify all serial port devices are working - transponder, GPS, radios, etc.
    b. Power down all displays except #2. Verify all serial port devices are working - transponder, GPS, radios, etc.
    c. Power down all displays except #3. Verify all serial port devices are working - transponder, GPS, radios, etc.

A SkyView Display serial port can be configured to communicate with one device on its TX and a different device on its RX, but when doing so, the TX and RX speeds must be the same.

Table 12 contains serial port wire functions and wire harness colors.

Serial Port	Wire Function	SkyView Display Harness Wire Colors
1	TX	Brown with Orange stripe
	RX	Brown with Violet stripe
2	TX	Yellow with Orange stripe
	RX	Yellow with Violet stripe
3	TX	Green with Orange stripe
	RX	Green with Violet stripe
4	TX	Blue with Orange stripe
	RX	Blue with Violet stripe
5	TX	Gray with Orange stripe
	RX	Gray with Violet stripe
	SV-GPS-250/2020 Power	Solid Orange
	SV-GPS-250/2020 Ground	Solid Black

Table 12 – SkyView Serial Port Connections

Traffic Devices

SkyView has the ability to receive and display aircraft traffic data from:

- Dynon Avionics SV-XPNDR-261/262 (from TIS)
- Dynon Avionics SV-ADSB-470/472/472 (from ADS-B)
- Garmin GTX 330 / 330ES (from TIS)
- Other devices that output traffic data that emulates "Garmin TIS format" including Garrecht / AIR Avionics TRX-1500 (set to TIS output), NavWorx ADS-B receiver, and Zaon XRX (set to "Garmin" output). For such devices, configure the SkyView serial port

connected to these devices in SERIAL PORT x SETUP, SERIAL IN DEVICE to GARMIN TIS TRAFFIC (which will automatically set the associated parameters).

If a device that can provide traffic data is connected to SkyView and configured (usually as a TIS serial traffic device under SETUP MENU > SYSTEM SETUP > SERIAL PORT SETUP), further traffic display options can be configured in SETUP MENU > TRAFFIC SETUP. Display of traffic on the MAP page and the PFD page can be set to:

- NONE (Do not display traffic)
- TA ONLY (Display only Traffic Advisories [TAs])
- ALL (Display ALL traffic)

Only one device can provide traffic information to SkyView at any moment. If you have more than one device connected to SkyView that is capable of providing traffic (such as, but not limited to, SV-XPNDR-261/262 (TIS), SV-ADSB-470/472/472, Zaon XRX, etc.), the devices provide traffic information with the following priority, based on the completeness of the traffic portrait they provide:

1. SV-ADSB-470/472/472 with full traffic (ADS-B ground station reporting with radar coverage)
2. TIS transponder from SV-XPNDR-261/262 or Garmin GTX 330 / ES (when in an active TIS coverage area)
3. FLARM
4. Zaon
5. SV-ADSB-470/472/472 with No RADAR (ADS-B reception, but without ground ADS-B station coverage or radar target inclusion).

Dynon Avionics SV-XPNDR-261/262 Transponder

See the SV-XPNDR-261/262 Installation and Configuration section for detailed instructions on how to set up the serial connection to the SV-XPNDR-261/262.

Note that if you are using a Dynon Avionics SV-XPNDR-261/262 Transponder, none of the encoder options in the below sections should to be set for the Dynon Avionics SV-XPNDR-261/262 module to receive pressure altitude. Instead, when the SV-XPNDR-261/262 is set up as described in the SV-XPNDR-261/262 Installation and Configuration section, it is automatically configured to receive pressure altitude from SkyView. Alternatively, systems that require the use of an external altitude encoder can be configured per the following section to have SkyView pass along an external pressure altitude source.

Dynon Avionics SV-ADSB-470/472/472

See Section 14 - SV-ADSB-470/472 Installation and Configuration for detailed instructions on how to set up the serial connection to the SV-ADSB-470/472/472.

Garmin GTX 330ES

To enable ADS-B traffic with a Garmin GTX 330ES, both the serial port transmit and serial port receive between SkyView and the GTX 330ES must be connected and configured. The GTX 330ES must be fully configured to output ADS-B Out, which requires a TSO'd GPS position.

Contact Garmin for correctly configuring the GTX 330ES ADS-B Out capability. Also see SV-ADSB-470/472 Installation and Configuration for additional configuration.

- SETUP MENU > SYSTEM SETUP > SERIAL PORT SETUP > SERIAL PORT x SETUP > SERIAL IN DEVICE > GARMIN GTX 330ES
- SETUP MENU > SYSTEM SETUP > SERIAL PORT SETUP > SERIAL PORT x SETUP > SERIAL OUT DEVICE > ICARUS ALTITUDE 100ft OR ICARUS ALTITUDE 10ft
- SETUP MENU > SYSTEM SETUP > AIRCRAFT INFORMATION > TRANSPONDER HEX CODE > (set to same HEX CODE as configured in the Garmin 330 ES) > ACCEPT (button).

External Serial Altitude Encoder Support

Some locales may require the use of a certified altitude encoder with the Dynon Avionics SV-XPNDR-261/262 Transponder. SkyView supports external serial altitude encoders that use Icarus/Garmin format. When one is connected, the SV-XPNDR-261/262 uses the external altitude encoder data source instead of SkyView's own ADAHRS-generated pressure altitude. However, the altitude displayed by SkyView on the PFD page is ALWAYS sourced from SkyView ADAHRS data.

To have SkyView use an external altitude serial encoder as the pressure altitude source for the SV-XPNDR-261/262:

- Wire a SkyView serial receive line to the respective serial transmit connection from the serial altitude encoder. If you have more than one SkyView display, make the same connection to all SkyView displays.
- Ensure there is a shared ground between the SkyView display and the serial altitude encoder. If you have more than one SkyView display, make the same connection to all SkyView displays.
- Configure this serial port on each display under SETUP MENU > SYSTEM SETUP > SERIAL PORT SETUP. The SERIAL IN device for this serial port should be set to ICARUS/GARMIN ALTITUDE.

Non-Dynon Avionics Transponder Serial Altitude Encoder Output

To use SkyView's altitude output functionality with your transponder that can receive serial altitude input:

- Wire a SkyView serial transmit line to the respective receive connection on the transponder. If you have more than one SkyView display, make the same connection to all SkyView displays.
- Ensure there is a shared ground between the SkyView display and the transponder. If you have more than one SkyView display, make the same connection to all SkyView displays.
- Configure the serial port on each display appropriately. There is an example serial port configuration on 4-38.

SkyView Altitude Encoder Output Formats

There must be a SkyView ADAHRS installed for the altitude encoder output to function.

SkyView outputs its altitude measurements in two different formats. You can use either format on any of the serial ports. These formats are described in Table 13 and Table 14. SkyView will function properly whether or not this altitude encoder functionality is used.

ICARUS	
Used by	Garmin GTX330/ES (Garmin serial port must be set to Icarus input), Garmin GTX327 (Garmin serial port must be set to Icarus input), Garmin GTX328 (Garmin serial port must be set to Icarus input), Icarus, Trimble
Baud rate	9600
Format	ALT, space, five altitude bytes, carriage return
Example message	ALT 05200[CR]

Table 13 – Icarus Format

DYNON AVIONICS CONVERTER	
Used by	Dynon Avionics Encoder Serial-to-Parallel Converter, Garmin AT (formerly UPS Aviation Technologies) Garmin SL70 (same unit as Garmin AT)
Baud rate	1200
Format	#AL, space, +/-sign, five altitude bytes, T+25, checksum, carriage return
Example message	#AL +05200T+25D7[CR]

Table 14 – Dynon Avionics Serial-to-Gray Code Converter Format

Per ATC/FAA requirements, SkyView's serial encoder output reports pressure altitude, which, by definition, is indicated altitude when the baro is set to 29.92. Thus, when you set SkyView's baro adjustment to 29.92, its indicated altitude will match the altitude that is being reported to your transponder.

Non-Dynon Avionics Transponder Serial Input Installation

SkyView can display the status of the Garmin GTX 327 and Garmin GTX 330 / 330ES transponders. To use this functionality with SkyView:

- Wire a serial receive line to the respective transmit line on the transponder. If you have more than one SkyView display, make the same connection to all SkyView displays.

- Ensure there is a shared ground between the SkyView display and the transponder. If you have more than one SkyView display, make the same connection to all SkyView displays.
- Configure the serial port on each display appropriately under SETUP MENU > SYSTEM SETUP > SERIAL PORT SETUP.
- Configure the serial port on the transponder appropriately. For a Garmin GTX 327, 330 / ES, the RS-232 output of the appropriate serial port on the transponder should be set to REMOTE+TIS.

Gray-Code Transponder Installation

To use SkyView's altitude encoder functionality with your Gray Code transponder:

- Follow the installation instructions in the Gray-Code Transponder Installation Section. If you have more than one SkyView display, make the same connection(s) to all SkyView displays.
- Configure the serial port on each display according to the instructions on page 15-7.

Reference the Serial Port Configuration Section of this guide for serial port configuration information.

Garmin SL30 COM / NAV Radio

In addition to the NAV radio functions of the SL30, SkyView can display COM radio information from the SL30 on the top bar of the SkyView display(s) and send COM frequencies to the SL30 (TUNE COM).

- Connect SL30 serial RX pin 4 (RxD1) to a SkyView serial TX. If you have more than one SkyView display, make the same connection to all SkyView displays.
- Connect SL30 serial TX pin 5 (TxD1) to a SkyView serial RX. If you have more than one SkyView display, make the same connection to all SkyView displays.
- Ensure there is a shared ground between the SkyView display and the SL30. If you have more than one SkyView display, make the same connection to all SkyView displays.
- Configure the serial port on the SL30 appropriately. On the SL30, the Indicator Head Type should be set to NONE.

On SkyView

- SETUP MENU > SYSTEM SETUP > SERIAL PORT SETUP > SERIAL PORT x SETUP > SERIAL IN DEVICE > GARMIN / APOLLO SL30. This will automatically set the SERIAL IN/OUT BAUD RATE and SERIAL OUT DEVICE.
- Set SERIAL IN FUNCTION TO NAV 1, 2, 3, or 4. If the SL30 is the only NAV device, select NAV 1.
- Set NAVIGATION SOURCE DISPLAY NAME: (user selectable, 7 characters, suggest SL30). The name entered here is displayed as the HSI source and the Flight Plan Source (if this device outputs a flight plan).
- If you wish the SL30 frequency and status to be displayed on the top bar:
  SETUP MENU > SYSTEM SETUP > DISPLAYED COM > GARMIN / APOLLO SL30 (PORT x)
  and
  SETUP MENU > SYSTEM SETUP > DISPLAY COM IN TOP BAR: YES

Val Avionics NAV 2000

- To work with SkyView, the NAV 2000 must have v1.10 Software (minimum). The Software version is displayed during the NAV 2000 startup.
- Connect NAV 2000 serial RX Pin 4 (Connector P1) to a SkyView serial TX. If you have more than one SkyView display, make the same connection to all SkyView displays.
- Connect NAV 2000 serial TX Pin 5 (Connector P1) to a SkyView serial RX. If you have more than one SkyView display, make the same connection to all SkyView displays.
- Ensure there is a shared ground between the SkyView display and the NAV 2000 – Serial Ground Pin 3 (Connector P1). If you have more than one SkyView display, make the same connection to all SkyView displays.
- Configure the NAV 2000:
- Enter the config page by pressing and holding both the left and right knobs while the unit is starting up until the display shows the last used active frequency and the first config page:
    - *A108.00 Rs I:xxx (the *x*'s are a placeholder for the resolver setting)
- Rotate the left inner (small) encoder to show *Non* in the section following *Rs I:
- Push and hold both encoder buttons to exit from the configuration pages

On SkyView

- SETUP MENU > SYSTEM SETUP > SERIAL PORT SETUP > SERIAL PORT x SETUP > SERIAL IN DEVICE > VAL AVIONICS NAV 2000. This will automatically set the SERIAL IN/OUT BAUD RATE and SERIAL OUT DEVICE.
- Set SERIAL IN FUNCTION TO NAV 1, 2, 3, or 4. If the NAV 2000 is the only NAV device, select NAV 1.
- Set NAVIGATION SOURCE DISPLAY NAME: (user selectable, 7 characters – suggest NAV2000). The name entered here is displayed as the HSI source and the Flight Plan Source (if this device outputs a flight plan).
- SETUP MENU > SYSTEM SETUP > DISPLAYED COM: NONE (If a SkyView compatible COM radio such as the SV-COM-C25 is installed, refer to those instructions for this setting).
  and
  SETUP MENU > SYSTEM SETUP > DISPLAY COM IN TOP BAR: NO (If a SkyView compatible COM radio such as the SV-COM-C25 is installed, refer to those instructions for this setting).

Garmin SL40 COM Radio

SkyView can display COM radio information from the SL40 on the SkyView top bar and send COM frequencies to the SL40 (TUNE COM).

- Connect SL40 serial RX pin 10 (RxD1) to a SkyView serial TX. If you have more than one SkyView display, make the same connection to all SkyView displays.
- Connect SL40 serial TX pin 3 (TxD1) to one of the SkyView serial RX pins on each display. If you have more than one SkyView display, make the same connection to all SkyView displays.
- Ensure there is a shared ground between the SkyView display, and the SL40. If you have more than one SkyView display, make the same connection to all SkyView displays.
- Configure the serial port on the SL40 appropriately.

- Configure the serial port: SETUP MENU > SYSTEM SETUP > SERIAL PORT SETUP > SERIAL PORT x SETUP > SERIAL IN DEVICE > GARMIN / APOLLO SL40. This will automatically set the SERIAL IN FUNCTION, SERIAL IN/OUT BAUD RATE, and SERIAL OUT DEVICE.
- Set the SL40 status to be displayed on the top bar: SETUP > SYSTEM SETUP > DISPLAYED COM > GARMIN / APOLLO SL40 (PORT x)
  and
  SETUP MENU > SYSTEM SETUP > DISPLAY COM IN TOP BAR: YES

Trig TY91 COM Radio

SkyView can display COM radio information from the TY91 on the top bar of the SkyView display(s) and "push" COM frequencies to the TY91 (TUNE COM).

- Connect TY91 RS232 In (TC90 Pin 6) to a SkyView serial TX. If you have more than one SkyView display, make the same connection to all SkyView displays.
- Connect TY91 RS232 Out (TC90 Pin 5) to a SkyView serial RX. If you have more than one SkyView display, make the same connection to all SkyView displays.
- Ensure there is a shared ground between the SkyView display and the TY91. If you have more than one SkyView display, make the same connection to all SkyView displays.
- On the TY91, configure the serial port appropriately (per Trig's documentation).

On SkyView

- SETUP MENU > SYSTEM SETUP > SERIAL PORT SETUP > SERIAL PORT x SETUP > SERIAL IN DEVICE > TRIG TY91. This will automatically set the SERIAL IN FUNCTION, SERIAL IN/OUT BAUD RATE, and SERIAL OUT DEVICE.
- SETUP MENU > SYSTEM SETUP > PRIMARY COM > TRIG TY91 (PORT x)
- SETUP MENU > SYSTEM SETUP > DISPLAY COM IN TOP BAR > YES

Icom IC-A210 COM Radio

The IC-A210 does not transmit status or frequencies via serial port, so IC-A210 information cannot be displayed on the top bar of the SkyView display(s). SkyView can send COM radio frequencies to the IC-A210 (TUNE COM).

- Confirm that your A210 is running Software version 1.53 or newer. This feature will not work with old Software. Contact Icom for details on upgrading your radio Software.
- Connect IC-A210 serial RX (Molex Pin 2 / D15 Pin 10) to a SkyView serial TX. If you have more than one SkyView display, make the same connection to all SkyView displays.
- Ensure there is a shared ground between the SkyView display and the IC-A210. If you have more than one SkyView display, make the same connection to all SkyView displays.
- On the IC-A210, configure the serial port appropriately (per Icom documentation).

On SkyView

- SETUP MENU > SYSTEM SETUP > SERIAL PORT SETUP > SERIAL PORT x SETUP > SERIAL IN DEVICE > ICOM A210. This will automatically set the SERIAL IN FUNCTION, SERIAL IN/OUT

BAUD RATE, and SERIAL OUT DEVICE. (Although there is no IC-A210 serial TX to SkyView serial RX connection, SERIAL IN DEVICE must be configured as described.)

- SETUP MENU > SYSTEM SETUP > PRIMARY COM > ICOM A210 (PORT x)
  and
  SETUP MENU > SYSTEM SETUP > DISPLAY COM IN TOP BAR > NO

MGL Avionics V6/V10 COM Radio

The V6 and V10 do not transmit status or frequencies via serial port, so V6/V10 information cannot be displayed on the top bar of the SkyView display(s). SkyView can send COM radio frequencies to the V6/V10 (TUNE COM).

- Connect V6/V10 RS232 DATA1 - IN (D25 Pin 3) to a SkyView serial TX. If you have more than one SkyView display, make the same connection to all SkyView displays.
- Ensure there is a shared ground between the SkyView display and the V6/V10. If you have more than one SkyView display, make the same connection to all SkyView displays.
- On the V6/V10, configure the serial port appropriately (per MGL Avionics' documentation).

On SkyView

- SETUP MENU > SYSTEM SETUP > SERIAL PORT SETUP > SERIAL PORT x SETUP > SERIAL IN DEVICE > MGL V6/V10. This will automatically set the SERIAL IN FUNCTION, SERIAL IN/OUT BAUD RATE, and SERIAL OUT DEVICE. (Although there is no V6/V10 serial TX to SkyView serial RX connection, SERIAL IN DEVICE must be configured as described.)
- SETUP MENU > SYSTEM SETUP > PRIMARY COM > MGL V6/V10 (PORT x)
  and
  SETUP MENU > SYSTEM SETUP > DISPLAY COM IN TOP BAR > NO

f.u.n.k.e. Avionics ATR833 8.33 kHz-capable COM Radio

Garmin GTR 200

Garmin GTR 225 COM Radio

Garmin GNC 255 COM Radio / NAV Receiver

SkyView can send frequencies to the GNC 255's standby frequency.

On the GNC 255:

- Connect GNC 255 P2001 Pin 16 to a SkyView serial TX. If you have more than one SkyView display, make the same connection to all SkyView displays.
- Connect GNC 255 P2001 Pin 1 to a SkyView serial RX. If you have more than one SkyView display, make the same connection to all SkyView displays.
- Ensure there is a shared ground between the SkyView display and the GNC 255. If you have more than one SkyView display, make the same connection to all SkyView displays.
- On the GNC 255, configure the serial port:
  - Set "I/O Mode" to "NMEA"
  - Set "CDI Indicator" to "NONE"

On SkyView:

- SETUP MENU > SYSTEM SETUP > SERIAL PORT SETUP > SERIAL PORT x SETUP > SERIAL IN DEVICE > GARMIN GNC 255 A/B. This will automatically set the SERIAL IN/OUT BAUD RATE, and SERIAL OUT DEVICE.
- SETUP MENU > SYSTEM SETUP > SERIAL PORT SETUP > SERIAL PORT x SETUP > SERIAL IN FUNCTION > NAV 1.

Trig Avionics TY91 and TY92 COM Radio[10]

SkyView can display COM radio information from the ATR833, GTR 200, GTR 225, GNC 255, TY91, and TY92 on the SkyView top bar and send COM frequencies to them (TUNE COM).

Note that SkyView does not send database information for the GTR 200 to enable the GTR 200's "Nearest or Flight Plan Airports" feature.

- Connect the radio's serial RX to a SkyView serial TX. If you have more than one SkyView display, make the same connection to all SkyView displays.
- Connect the radio's serial TX to one of the SkyView serial RX pins on each display. If you have more than one SkyView display, make the same connection to all SkyView displays.
- Ensure there is a shared ground between the SkyView display, and the radio. If you have more than one SkyView display, make the same connection to all SkyView displays.
- Configure the serial port on the radio appropriately.
- Configure the serial port: SETUP MENU > SYSTEM SETUP > SERIAL PORT SETUP > SERIAL PORT x SETUP > SERIAL IN DEVICE >
  FUNKE ATR833 or
  GARMIN GTR 200 or
  GARMIN GNC 255 A/B or
  GARMIN GTR 225 A/B or
  TRIG TY9X 25KHz ONLY
  TRIG TY9X 8.33/25KHz
  This will automatically set the SERIAL IN FUNCTION, SERIAL IN/OUT BAUD RATE, and SERIAL OUT DEVICE.

Set the radio status to be displayed on the top bar: SETUP > SYSTEM SETUP > DISPLAYED COM > (device you chose above) (PORT x)
and
SETUP MENU > SYSTEM SETUP > DISPLAY COM IN TOP BAR: YES

Emergency Location Transmitter (ELT)

SkyView can provide a GPS data stream to ELTs that accept GPS data in NMEA format.

- Wire a serial transmit (TX) line from one display to the receive (RX) line on the ELT. If you have more than one SkyView display, make the same connection to all SkyView displays.
- Ensure there is a shared ground between the SkyView display and the ELT. If you have more than one SkyView display, make the same connection to all SkyView displays.

[10] Full TY91/92 8.33 kHz support depends on a future software update from Trig.

- Configure the SkyView display serial port:
  SETUP MENU > SYSTEM SETUP > SERIAL PORT SETUP > SERIAL PORT x SETUP
  SERIAL IN DEVICE: (don't care, does not affect ELT)
  SERIAL IN/OUT BAUD RATE: (set to match speed of ELT; typically 4800 or 9600)
  SERIAL OUT DEVICE: NMEA OUT (BASIC)

Dynon Avionics ADAHRS / EMS / SYSTEM / NMEA (GPS) Data Outputs

To output real-time data to an external serial device, such as a serial data logger or other device that accepts NMEA or Dynon Avionics formats:

- Wire a serial transmit line from one display to the receive line on the external serial device. If you have more than one SkyView display, make the same connection to all SkyView displays.
- Ensure there is a shared ground between the SkyView display and the external serial device. If you have more than one SkyView display, make the same connection to all SkyView displays.
- Configure the serial port on the display appropriately under SETUP MENU > SYSTEM SETUP > SERIAL PORT SETUP, SERIAL PORT x SETUP > selecting the desired output data format.

TIS Format Traffic Output

SkyView can be configured to output TIS format traffic information for external display on other avionics that can receive traffic in TIS format. When this option is selected, only the actual TIS traffic from a SV-XPNDR-261/262 is included in this serial data stream. This stream does not include ADS-B, FLARM, Zaon, or other traffic sources that may be available to SkyView.

- Wire a serial transmit line from one display to the receive line on the external serial device. If you have more than one SkyView display, make the same connection to all SkyView displays.
- Ensure there is a shared ground between the SkyView display and the external serial device. If you have more than one SkyView display, make the same connection to all SkyView displays.
- Configure the serial port on the display appropriately under SETUP MENU > SYSTEM SETUP > SERIAL PORT SETUP, SERIAL PORT x SETUP > TIS OUT (330 FORMAT).

USB Usage and Accessibility

It is useful to have the USB socket on the display's wire harness accessible after installation for file uploads and downloads.

The USB connector is used during the following operations:

- System Software updates
- Configuration file uploads and downloads
- Database updates

External Dim Control (Dimming) Connections

DIM INPUT (Pin 25) The backlight level on a SkyView display can be increased or decreased using a varying DC voltage of 0 to 36 volts DC, such as provided by the Dynon Avionics SV-KNOB-DIMMER – see Accessory Installation and Configuration, SV-KNOB-DIMMER for details. See Display Setup, External Brightness Management later in this section to configure brightness levels for specific voltages.

DIM OUTPUT (Pin 26) The DIM OUTPUT signal is an approx. 120 Hz (may change in future Software revisions) Pulse Width Modulation (PWM) signal directly proportional to the screen brightness – 100% to 0.02%. This output is designed to directly control the dim level of devices such as LEDs; a common use is for the back-lighting of switches in a panel so that they dim at night in conjunction with SkyView's automatic dim levels.

The DIM OUTPUT (Pin 26) signal is an open collector to ground - it acts as a switch to ground, and does not source any power itself. Pin 26 can sink a maximum current of 120mA and a maximum voltage of 40V. The DIM OUTPUT signal is not analog and cannot be used to control the dim level of devices that expect 0-5V, 0-12V, or a resistance as their dimming input.

Do not connect the DIM OUTPUT (Pin 26) signal from multiple SkyView screens in parallel. The DIM OUTPUT signals from each display is not synchronous, and this will lead to inconsistent behavior.

Audio Output Electrical Connections

Dynon Avionics recommends that SkyView's audio outputs be connected to an unmuted input on your audio panel or intercom. When connected this way, critical audio alerts generated by SkyView are not muted by ATC transmissions or other audio events that could cause SkyView's audio to be suppressed if it were connected to a muting input.

SkyView's audio output cannot be connected in parallel with a radio to a headset. Doing so will significantly reduce the volume of the radio output, possibly to the level that it is not usable. An intercom such as the SV-INTERCOM-2S, audio mixer, or audio panel is required to utilize this output.

If you are converting a Dynon Avionics D10/D100 product installation to a SkyView installation, you should remove the variable resistor that is connected to the existing audio output wiring: SkyView's audio output (volume) is adjustable.

The audio outputs on pins 13 and 31 (left and right, respectively) of the display's D37 connector can drive audio panel or intercom auxiliary inputs. When interfaced with such devices, they can generally be used with any input designated as an auxiliary input without any external resistors or other components needed between the SkyView and the intercom.

Use left and right audio outputs for stereo mode. If the audio panel or intercom only supports mono input, short the left and right audio outputs together and connect them to the mono input on the device. To minimize noise, ensure that your SkyView audio ground and intercom or

audio panel ground are *directly connected together*, even though they nominally share a common ground via other aircraft wiring (audio ground is pin 30 on the D37).

If there is more than one display on a SkyView network, you MUST connect all displays' audio outputs to the same audio panel input to ensure that audio is always heard. Electrically short the respective left and right outputs together for stereo mode (i.e., left-to-left and right-to-right) or connect all audio outputs together for mono mode. The same rule applies for audio grounds.

To minimize the possibility of audio "humming", a 16 AWG wire may optionally be connected between the ground point for the intercom/audio panel/radio(s) and SkyView display case(s). To attach the wire to the rear of the SkyView display, a 4-40 x 3/16" long screw may be screwed into the threaded boss above the USB ports on the back of the SkyView display.

Audio output volume will be controlled via the interface on a SkyView display, so no external hardware components are required. The audio output from SkyView has a maximum output of 10V p-p with 50 Ω (50 ohms) of source impedance.

SkyView systems with more than one display normally only output audio alerts from one display to minimize audio distortion. In a SkyView system that has more than one display and dual SV-EMS-220s/221s to monitor dual engines, EMS audio alerts are enabled from two displays. At moments when two displays are outputting EMS audio alerts, there may be minor "doubling" of audio alerts heard in the audio system.

SkyView Audio Output Settings

Go to SETUP MENU > SYSTEM SETUP > AUDIO SETUP to configure audio output settings. Most of the items in this menu control whether the audio output for a particular alert or alert category is played or not. The settings that can be adjusted here that are not voice alert toggles are:

- VOLUME CONTROL / TEST – Sets the volume level. While in this menu, sound is played continuously so that proper audio connectivity and volume levels can be confirmed.
    - In this menu only, audio is only outputted from the actual display that is in the setup menu. This allows one to troubleshoot the physical audio connections. In actual operation, only one of the displays transmits audio at a time. Which display happens to be transmitting is automatically managed by SkyView. Since all displays' audio outputs are connected together (and to the intercom or audio panel), this is transparent in actual use.
- BOOT SOUND – When set to ON, the system will say "Dynon Avionics SkyView" when it first starts up.
- ANGLE OF ATTACK – This sets a pulsing, progressive tone that increases in frequency, similar in nature to a conventional reed type aircraft stall warning sound to a reed-type stall warning sound, although it is much more predictable in its progression. It can be set to start its pulsing tones at either the border of the yellow/green marks on the AOA bars, the middle of the yellow, or the yellow/red border. The pulsing tones start at the level selected and get progressively quicker and closer together until a solid tone is played at critical AOA (in the red.)
    - INHIBIT AOA BELOW AIRSPEED – Allows you to set an airspeed below which no AOA tones are played. This helps prevent nuisance alarms while on the ground and taxiing, especially in tail draggers.

Contact Inputs

Contact Input #1 – (Optional) External LEVEL Button. See the Autopilot section for detailed explanation.

Contact Input #2 – (Optional) External GO AROUND Button. See the Autopilot section for detailed explanation.

External GO AROUND Button is not supported in SkyView SE. If you intend to install and use SkyView SE, do not purchase or install an External GO AROUND Button.

Contact Input #3 and #4 are currently not supported. A future Software update may enable this functionality. Do not connect anything to these pins at this time.

Reserved Connections for Future Use

Do not connect anything to unspecified D37 connector pins (directly or using the display harness). These pins are reserved for future use.

Display Setup

You can access important information about a SkyView display as well as configure serial ports, characterize your display backlight behavior and specify other display-specific settings.

How to Access Display Hardware Information

Enter the Display Hardware Information Page (SETUP MENU > LOCAL DISPLAY SETUP > DISPLAY HARDWARE INFORMATION) to access important display hardware information. This menu contains status information only—nothing on it is configurable. Reference the Operation Section of this guide for more information about this menu.

Serial Port Configuration

Reference serial device documentation for serial communication specifications.

SkyView serial ports are configured in the Serial Port Setup Menu (SETUP MENU > SYSTEM SETUP > SERIAL PORT SETUP). SkyView serial ports have four parameters that must be defined:

- Input Device
- Input Function
- Baud Rate
- Output Device

Note that sometimes a parameter will be defined as NONE on the screen. For example, when a serial port is configured as only an output, the input device and input function will both be set to NONE.

Input Device

Set the input device to the data format the SkyView display should expect from an input device. The configurable options list contains equipment by brand and model and also generic data formats such as NMEA and aviation. NMEA is the standard format for most GPS units (including the SV-GPS-250). Aviation is used by some Garmin and Bendix/King panel mount equipment. *If your specific equipment is listed by brand and model, we recommend you configure SkyView to use this option instead of a generic data format.*

If you have any ARINC-429 devices, these are configured separately. See the SV-ARINC-429 Installation and Configuration Section of this guide for more information.

Input Function

SkyView has several options for input functions: NONE, GPS, NAV, or POS. Set the device's input function to NONE if it does not have an input function.

- **GPS devices** provide GPS position and navigational information. These devices are generally "moving maps" that depict airports, airspaces, etc., and can generate flight plans. They provide source data for the moving map, HSI, autopilot, synthetic vision, and the clock in the Top Bar. An example GPS device is a Garmin X96.
- **NAV devices** provide radio-based navigational information from a VOR or ILS. They provide source data for the HSI and autopilot. SkyView currently supports only the Garmin SL30 NAV Radio.
- **POS devices** provide only positional information. These are generally simple GPS receivers which cannot do flight planning. They provide source data for the moving map, synthetic vision, and the clock in the Top Bar. *Note that a POS device does not provide any data for the HSI and will not appear in the HSI NAVSRC rotation.* An example POS device is the Dynon Avionics SV-GPS-250/2020.

Input Function Considerations and Priorities

SkyView's Moving Map Page uses POS and GPS sources for its data. Regardless of the number of data sources in your system, this page prioritizes these sources and fails over to them as follows:

POS 1 ▸ GPS 1 ▸ GPS 2 ▸ GPS 3 ▸ GPS 4 ▸ POS 2 ▸ POS 3 ▸ POS 4

For example, if your system has one SV-GPS-2020 configured as POS 1 and a Garmin 396 configured as GPS 1, the Moving Map will always use the SV-GPS-2020 as its primary data source. If the SV-GPS-2020 fails or you configure its input function to NONE, the Moving Map Page will use the Garmin 396 (or other GPS source) configured as GPS 1 as its primary data source.

The SkyView HSI uses GPS and NAV sources for its overlays and the user must choose the source during operation.

SkyView's internal Navigation Mapping System can generate navigation information which can be displayed on the HSI. The Navigation Mapping System requires GPS data, which is sourced from the active (highest priority in the above list) POS or GPS source. Regardless of what source is being used for position information, the navigation provided by the Navigation Mapping System is always the SKYVIEW source on the HSI.

Baud Rate

Set this to match the baud rate of the serial device that is connected to the serial port. SkyView supports the following baud rates: 1200, 2400, 4800, 9600, 19200, 38400, 57600, and 115,200.

Note that if you use a serial port for a split function (e.g., GPS in and altitude encoder out), the input and output devices must use the same baud rate.

Output Device

Set output device to the data format the serial device should expect from the SkyView display (e.g., ICARUS (10ft)).

Example SkyView Serial Port Configuration for Icarus-Compatible Transponder

This example assumes that an Icarus format compatible transponder has been installed on serial port 1.

1. Enter the Serial Port 1 Setup Menu (SETUP MENU > SYSTEM SETUP > SERIAL PORT SETUP > SERIAL PORT 1 SETUP).
2. Set serial 1 input device to NONE (SERIAL 1 IN DEVICE: NONE).
3. Set serial 1 in function to NONE (SERIAL 1 IN FUNCTION: NONE).
4. Set serial 1 baud rate to 9600 (SERIAL 1 IN/OUT BAUD RATE: 9600)
5. Set serial 1 output device to ICARUS (100ft) or ICARUS (10ft) (SERIAL 1 OUT DEVICE: ICARUS (100ft) or ICARUS (10ft).
6. Press BACK or EXIT to save the settings.

Brightness Setup

Enter the Brightness Setup Page (SETUP MENU > LOCAL DISPLAY SETUP > BRIGHTNESS SETUP) to characterize the display's backlight behavior. The backlight level can be adjusted manually by the user *(not supported in SkyView SE)*, automatically by the display based on ambient light conditions, or by an external control signal while on the Brightness Setup Page and in normal flight. *Regardless of the specified control method, users always have the option of manually adjusting the backlight level in the Dim Menu.*

Automatic Brightness Management

To set the backlight level so that it automatically adjusts, set BRIGHTNESS SOURCE to INTERNAL (ZERO OFFSET) or INTERNAL (LAST) depending on whether you want the brightness setting to reset when SkyView is started, or you want the bright setting from SkyView's last use to be used when SkyView is started. When this option is selected, dimming is normally controlled automatically via ambient light detection, but it can also be controlled manually by using the DIM Menu. Dynon Avionics has created a default dimming profile that should work well in most aircraft. If you find that this profile does not work well in your installation, it can be customized to suit your preferences using the tools on the BRIGHTNESS SETUP Menu. This menu displays several parameters, which are listed and briefly explained below.

- LOCAL BRIGHTNESS SENSOR – This is an integer value ranging from 0 to 999 that represents the amount of light sensed by the display's integrated light sensor. Use this value to characterize the ambient light levels in your installation during characterization.
- BRIGHTNESS TARGET – This is a percentage ranging from 0% to 100% that represents the calculated target backlight level based on the sensed ambient light level and the percent brightness sensor value map. *The actual brightness never drops below 20% when the Brightness Setup Page is displayed, even though the target value may be below 20%.*

- xx% Brightness Sensor Value – There are four percent brightness sensor values: 25%, 50%, 75% and 100%. These values are correlated to a user-specified brightness sensor value, which are to the right of the percent value. These percentages along with the minimum brightness sensor value (explained below) form the calibration points for the backlight management profile. When the current brightness sensor value matches one of these points, the target backlight level is adjusted to its matching percentage. When the current brightness sensor value is in between these points, the display interpolates between the points and calculates an appropriate target backlight level. These values must be set by the user.
- MINIMUM BRIGHTNESS SENSOR VALUE – This is an integer value ranging from 0 to 999 that represents the smallest amount of light that is expected to be sensed by the integrated light sensor. This must be set by the user.
- RESET TO DYNON AVIONICS DEFAULTS – (If needed) Use this option to start over.

Press the ACCEPT button to save any changes you make.

External Brightness Management

Because of the streamlined menu structure of SkyView SE, there is no menu button available for manually adjusting the brightness of the SkyView SE display(s) and Dynon Avionics panel units. In a SkyView SE system, if you wish to manually adjust the brightness of your SkyView SE display(s) and Dynon Avionics panel units, you *must* use a method of External Brightness Management as described below. The easiest method to do so is to install a Dynon Avionics SV-KNOB-DIMMER.

The brightness level of SkyView and Dynon Avionics panel units can be increased or decreased by applying 0 to 36 volts DC to a SkyView display's DIM INPUT (Pin 25). Dynon Avionics offers the SV-KNOB-DIMMER (P/N 102801-000) as a convenient way to use this feature. Instructions for using External Brightness Management can be found later in this manual: Accessory Installation and Configuration, SV-KNOB-DIMMER.

Top Bar Setup

The top bar is the strip across the top of the screen. It displays textual information such as the clock, autopilot status, transponder, and COM radio status.

Enter the Top Bar Setup Page to configure the top bar (SETUP MENU > LOCAL DISPLAY SETUP > TOP BAR SETUP).

Aircraft Information

Use the Aircraft Information Page (SETUP MENU > SYSTEM SETUP > AIRCRAFT INFORMATION) to record important information about your aircraft.

The tail number must be present for SkyView network configuration and operation.

If you have more than one display in your SkyView system, the tail number only needs to be set on the display that you initially perform the Network Configuration

on. At network configuration time, all other displays that are set to the default tail number of DYNON will automatically have their settings and tail number synchronized with the display the configuration is performed from. After configuration, all displays' tail numbers and settings will be synchronized, and further setup tasks can be performed from any display.

For US registered aircraft with a conventional (pattern) N-number, when the tail number is entered, the HEX CODE will be set automatically (computed based on the aircraft N-number). If the TRANSPONDER HEX CODE cannot be computed, the TRANSPONDER HEX CODE remains set to 000000.

SkyView Classic, SkyView SE Screen Layout Setup

You can use Screen Layout Setup page (SETUP MENU > SYSTEM SETUP > SCREEN LAYOUT SETUP) to customize and restrict the ways that the PFD Page, Engine Page, and Map Page are displayed on your SkyView display(s). This feature can be used in a variety of ways:

- You can prohibit and restrict the use of certain menu items in the SCREEN menu. This can allow you to:
    - Enforce the relative layout of the PFD/Engine/Map pages on each display, for a consistent cockpit environment
    - Restrict the ability to remove Pages from a display. This can be used, for example, to force the PFD Page and the Engine Page always be displayed on a display or in the system.

  In multi-display systems, you can specify a reversion mode that automatically changes the screen configuration to a specific layout when only one display remains powered on. For example, if you normally have your left display showing PFD, and your right display showing Engine and Map, you could configure reversion mode to show all three pages automatically on the remaining single display should the other fail.

Menu items and settings available in the SCREEN LAYOUT SETUP menu include:

- GENERAL RULES – Settings under this menu control behavior of items contained under the SCREEN menu. This applies to all displays in the system, no matter which display you change these settings from.
    - SHOW LAYOUT BUTTON: Determines whether the SCREEN > LAYOUT button is available for use. The SCREEN > LAYOUT button allows the pilot to dynamically rearrange the order of the PFD/ENGINE/MAP pages on a display.
    - SHOW SWAP BUTTON: Determines whether the SCREEN > SWAP button is available for use. The SCREEN > SWAP button allows the pilot to swap the entire contents and page layouts of displays in a two-display SkyView System. Note that if there are three displays installed, the SWAP button will *not* appear.
- THIS DISPLAY – NORMAL OPERATION: The options under this menu apply only to the display that you are currently working with, and only when the system is operating normally (when the display is not in reversion mode or swapped)
    - PFD PAGE, ENGINE PAGE, MAP PAGE: For each of these entries, you can control whether each page is:

        - REQUIRED: The relevant page is always shown on this display. This is always shown on this display. The relevant page button under the SCREEN menu is not available.
        - ALLOWED (SAVE STATE): This display remembers whether the relevant page was being shown across power cycles. The relevant SCREEN button turns that page on and off on this display.
        - ALLOWED (NOT SHOWN AT BOOT): The relevant page is never on at boot. The relevant page button under the SCREEN menu turns that page on and off on this display.
        - ALLOWED (SHOWN AT BOOT): The relevant page is always on at boot. The relevant page button under the SCREEN menu turns that page on and off on this display.
        - NOT ALLOWED: The relevant page cannot be shown on this display. The relevant SCREEN button is not available.
    - VIDEO PAGE: You can control whether the VIDEO PAGE is:
        - ALLOWED (NOT SHOWN AT BOOT): The VIDEO PAGE is never on at boot. The VIDEO button under the TOOLS menu turns that page on and off on this display.
        - NOT ALLOWED: The VIDEO PAGE cannot be shown on this display. The VIDEO button under the TOOLS menu is not shown.
- REVERSION MODE CONFIGURATION – When only one display is powered on in a multiple display configuration, the layout picked here is forcibly displayed. This behavior applies equally whether all but one display in your system has failed or if you turn on one SkyView display before all others (as some SkyView pilots do to see engine instruments before engine start). This setting applies to all displays in the system, regardless of which display the settings are changed on.
    - DISABLED: Reversion Mode is disabled. The layout that was set on any display remains the same whether or not it is the only display powered on in a multi-display system.
        - PFD 40% / EMS / MAP 40%
        - PFD 50% / MAP 50%
        - PFD 50% / EMS 50%
        - PFD 80% / EMS 20%
        - PFD 100%

SkyView HDX Display Setup / Layout

For SkyView HDX, most setup and layout of the display and screen is performed as an operational function by pushing the DISPLAY key in the Main Menu.

The following configuration items are configurable via SETUP MENU > SYSTEM SETUP > SCREEN LAYOUT SETUP:

- REVERSION MODE CONFIGURATION – When only one display is powered on in a multiple display configuration, a reversionary display that consolidates display information onto the remaining display is presented. This behavior applies equally whether all but one display in your system has failed or if you turn on one SkyView display before all others (as some SkyView pilots do to see engine instruments before engine start). This setting applies to all displays in the system, regardless of which display the settings are changed on.
    - ENABLED: Reversion Mode is enabled. When a display is the only available display, PFD and MAP pages are displayed, along with the Engine Bottom Band and Map Info Column.
    - DISABLED: Reversion Mode is disabled. The layout that was set on any display remains the same whether or not it is the only display powered on in a multi-display system.

Reference for the SkyView HDX Pilot's User Guide for more detail about setting up your SkyView HDX display's layout.

SkyView Classic and SkyView HDX Touch Setup

SkyView Classic SV-D1000T and SkyView HDX displays SV-HDX800 and SV-HDX1100 have settings that are specific to the touch interface: SETUP MENU > LOCAL DISPLAY SETUP > TOUCH SETUP. This menu will not appear on SkyView Classic displays SV-D700 and SV-D1000, and SkyView SE displays SV-D600 and SV-D900.

- *(SV-D1000T Only)* TOUCH ENABLED – YES/NO – Enables / disables touch features on a SV-D1000T. When set to NO, an SV-D1000T behaves exactly as an SV-D1000.
- *(SV-D1000T Only)* KEYBOARD LAYOUT – A-Z | QWERTY – Selects the keyboard layout of the onscreen keyboard that appears when alphanumeric character input is required (such as creating flight plans).
- SHOW TOUCHES – YES/NO – Enables / disables a small circle to appear on the touch screen showing where the touch screen is sensing finger(s). SHOW TOUCHES is primarily used for diagnostics / troubleshooting and is not normally enabled.
- HARDWARE STATUS, EVENT COUNTER, POINT #1, POINT #2, and TOUCH TEST… are used for diagnostics / troubleshooting of the touch system of the display.

Glide Ring Setup

SkyView Classic (as of Software v14.0), and SkyView HDX, can display a Glide Ring . For instructions on how to use the Glide Ring feature, see the SkyView Classic Pilot's User Guide, Rev W. and later, or the SkyView HDX Pilot's User Guide.

There are two settings that need to be adjusted for your specific aircraft for Glide Ring to be accurately displayed:

- SETUP MENU > AIRCRAFT INFORMATION > SINK RATE DURING GLIDE

- SETUP MENU > PFD SETUP > AIRSPEED LIMITATIONS > Vg – BEST GLIDE (under PERFORMANCE)

Weight and Balance Setup

SkyView Classic (as of Software v15.0), and SkyView HDX can assist you in computing Weight and Balance for your aircraft.

At least two weight / moment points are required to define the quadrilateral that defines your Center of Gravity (CG) operating limits and the weight / moment points of the stations (which you define).

After setup is complete, Weight and Balance is accessed from the TOOLS > WT & BAL (SkyView Classic) or MENU > WEIGHT BAL icon (SkyView HDX). For instructions on how to use the Weight and Balance feature, see the SkyView Classic Pilot's User Guide, Rev. X and later, or the SkyView HDX Pilot's User Guide.

For Weight and Balance calculations to be displayed, several settings must be entered for your specific aircraft:

- SETUP MENU > AIRCRAFT INFORMATION > WEIGHT & BALANCE
  - > MAX GROSS WEIGHT
  - > EMPTY WEIGHT
  - > EMPTY ARM
  - > EMPTY MOMENT
  - > STATIONS
    - At least one Station is required. Up to nine Stations can be defined.
    - Typically, Stations would be defined for Fuel, Pilot, Co-pilot, and Baggage
    - Each Station entry consists of:
    - > NAME
    - > MAX Weight
    - > ARM
    - > ENTER AS FUEL (Y/N)
  - > CG LIMITS
    - A minimum of two CG Limits is required. Typically, enter a CG limit for the forward maximum CG points and a CG limit for the aft maximum CG point. More complicated limits for different weights (such as with a C172) can be accommodated.
    - > WEIGHT
    - > ARM
  - >UNITS
    - IN-LBS
    - CM-KGS for aircraft with metric limits

Maintenance Log Setup

Beginning in Software v15.0, SkyView Classic, and SkyView HDX can provide up to ten maintenance reminders based on Date, elapsed Tach Time, or elapsed Hobbs Time. A maintenance reminder can also be displayed with no time basis (display text only).

After setup is complete, the Maintenance Log is accessed from the TOOLS > MAINTENANCE (SkyView Classic) or MENU > MAINT LOG icon (SkyView HDX). For instructions on how to use the Maintenance Log feature, see the SkyView Classic Pilot's User Guide, Rev. X and later, or the SkyView HDX Pilot's User Guide.

Each item in the maintenance log requires entry of the time basis (or NONE) to determine whether the item is not yet due, due, or overdue.

- SETUP MENU > AIRCRAFT INFORMATION > MAINTENANCE LOG
  - > LOG ITEM x
    - > NAME (user-defined text, up to 14 characters)
    - > TIME BASIS (NONE | DATE | TACH | HOBBS)
    - > END TIME, HRS (if TACH or HOBBS was selected)
      or…
      > END DAY, END MONTH, END YEAR (if DATE was selected)

5. SV-ADAHRS-200/201 Installation and Configuration

Figure 37 – SV-ADAHRS-200

Figure 36 – SV-ADAHRS-201

Information in this section, and other parts of this manual, that apply equally to either the SV-ADAHRS-200 or the SV-ADAHRS-201, or both units together, the phrase “SV-ADAHRS-200/201” is used. When there is specific information for one unit only, that unit’s name is used. In operation, the SV-ADAHRS-200 and SV-ADAHRS-201 are identical in functionality. The SV-ADAHRS-200/201 also incorporates an internal magnetic sensor (magnetometer). In this section, the more familiar term “compass” is often substituted for references to the magnetic sensor / magnetometer.

The SkyView SV-ADAHRS-200 (Figure 37) and SV-ADAHRS-201 (Figure 36) ADAHRS modules use MEMS sensor technology to accurately measure inertial, magnetic, and air data. To ensure accuracy in its readings, it is very important that you install the module correctly and perform the specified calibration steps. This section guides you through that process.

The SV-ADAHRS-200 is a “primary” ADAHRS module; the SV-ADAHRS-201 is the backup / redundant ADAHRS module. To enable the SkyView Primary Flight Display (PFD), there must be at least one SV-ADAHRS-200 in the SkyView system. Figure 38 below is a high-level overview of a suggested and installation and configuration procedure for the SV-ADAHRS-200/201:

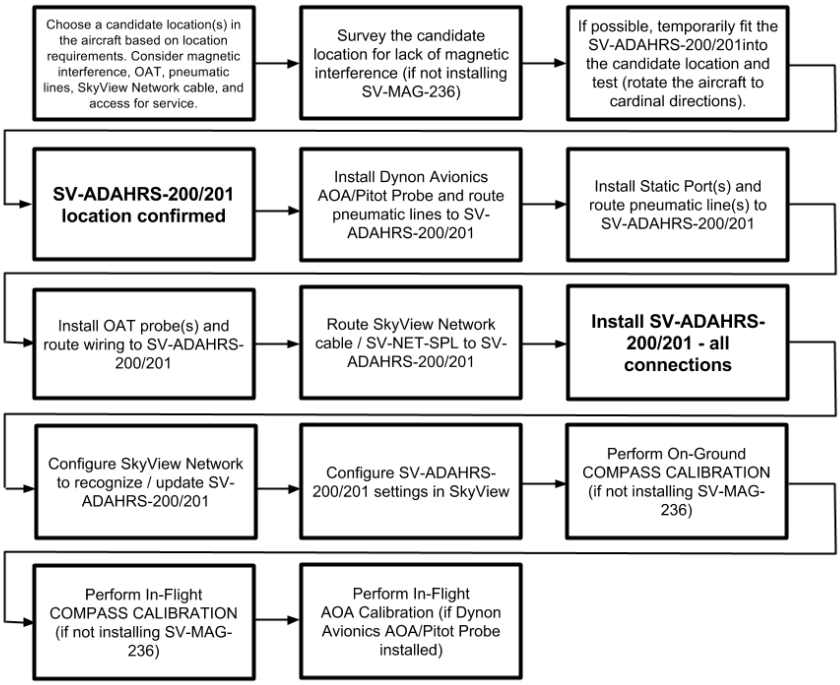

Figure 38 – Suggested SV-ADAHRS-200/201 Installation Procedure

Proper installation of the SV-ADAHRS-200/201 module(s) is critical. Correct PFD performance is significantly linked to a proper ADAHRS installation. The installation location must meet all of the mechanical, magnetic, orientation, placement, and environmental requirements detailed below.

Optional Components for Easier Installation of your SV-ADAHRS-200/201

Dynon Avionics offers a number of optional accessories for easier installation of your SV-ADAHRS-200/201. These accessories can be obtained from Dynon Avionics Sales, or your Dynon Avionics dealer.

Dynon Avionics offers three different AOA/Pitot probes. These AOA/Pitot probes are specially designed for the Dynon Avionics SV-ADAHRS-200/201 to enable the sensing and display of Angle of Attack (AOA) on your SkyView display:

- **AOA/Pitot Probe, Under Wing, Unheated** (P/N 100141-000). See Figure 40 below.
- **AOA/Pitot Probe, Under Wing, Heated** (P/N 100667-000). See Figure 41 below.
- **AOA/Pitot Probe, Boom, Unheated** (P/N 100532-000). See Figure 39 below.

Figure 40
Under Wing
Unheated

Figure 41
Under Wing
Heated

Figure 39
Boom
Unheated

Dynon Avionics offers the **Pitot/Static/AOA Pneumatic Installation Kit** (P/N 102628-000) – see Figure 42. This kit includes all required pneumatic components – 25 feet (7.62 meters) of tubing, fittings, a static port for installation on the fuselage, even a tubing cutter. There are sufficient parts to be able to split the pneumatic lines to connect both an SV-ADAHRS-200 and an SV-ADAHRS-201.

Figure 42
Pitot/Static/AOA Pneumatic Installation Kit

Dynon Avionics offers the **Dual ADAHRS Mounting Kit** (P/N 102532-000) – see Figure 43. This kit allows the convenient "stacking" of an SV-ADAHRS-201 onto an SV-ADAHRS-200 for easier installation. This kit allows the dual ADAHRS units to be aligned exactly together in the pitch and roll axis, so there is no possibility that alignment of the two ADAHRS units can be different. This kit is particularly useful when retrofitting an SV-ADAHRS-201 for redundancy into a SkyView system that previously only had an SV-ADAHRS-200 installed.

Figure 43 – Dual ADAHRS Mounting Kit

Dynon Avionics offers the **SV-NET-SPL "Splitter" Cable** – see Figure 44. This cable allows a single (more economical, lower weight) SkyView Network Cable to be run to the location of an SV-ADAHRS-200 and SV-ADAHRS-201 installation and then "split" the SkyView Network signals to the SV-ADAHRS-200 and SV-ADAHRS-201. The SV-NET-SPL is an ideal companion accessory to the Dual ADAHRS Mounting Kit.

Figure 44 – SV-NET-SPL (Splitter)

Dynon Avionics offers the **SV-MAG-236 Remote Magnetometer** – see Figure 45. The SV-MAG-236 can be used when an (otherwise) good location for an SV-ADAHRS-200/201 is problematic because of magnetic interference, such as inside the fuselage of a steel tube airframe. In such situations, the SV-MAG-236 can be located in a wingtip, free of magnetic interference. Even if you have both an SV-ADAHRS-200 and an SV-ADAHRS-201 installed, only one SV-MAG-236 is required.

Figure 45 – SV-MAG-236 Remote Magnetometer

Physical Installation

SV-ADAHRS-200/201 Location Requirements

An SV-ADAHRS-200/201 installation location should be a rigid surface within 12 feet (3.66 meters) longitudinally and 6 feet (1.83 meters) laterally of the aircraft's center-of-gravity. Figure 46 – SV-ADAHRS-200/201 with Respect to Center-of-Gravity illustrates this criterion.

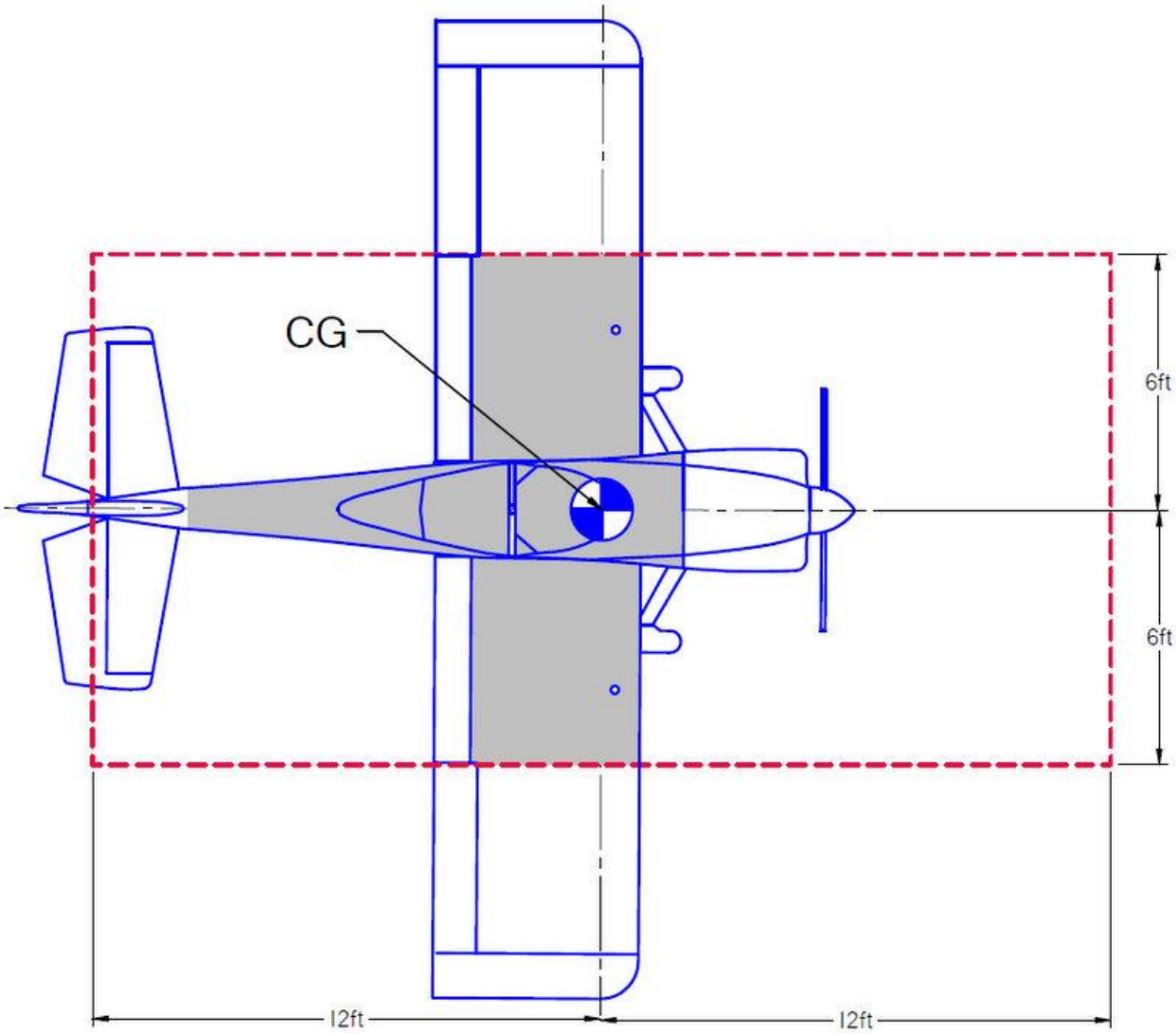

Figure 46 – SV-ADAHRS-200/201 with Respect to Center-of-Gravity

The instructions below regarding "magnetic suitability" are in reference to the *internal* magnetometer of the SV-ADAHRS-200/201. If the SV-MAG-236 Remote Magnetometer is installed in your SkyView system, the instructions regarding "magnetic suitability" for the SV-ADAHRS-200/201 can be disregarded – the internal magnetometer of the SV-ADAHRS-200/201 is disabled in lieu of the SV-MAG-236 *Remote* Magnetometer. Installation instructions for the SV-MAG-236 are in Section 20: SV-MAG-236 Installation and Configuration.

The location of the SV-ADAHRS-200/201 should also be magnetically benign. Given that it may be difficult or impossible to avoid all sources of magnetic interference, it is possible to characterize and compensate for small, static magnetic fields with calibration. Calibration cannot, however, compensate for *dynamic* magnetic fields (e.g., AC currents, non-constant DC currents, and non-stationary ferrous material such as electric turn coordinators and control

surfaces). Thus, you must avoid mounting the module close to sources of *dynamic* magnetic fields, avoid wires that carry large amounts of current, and use non-magnetic fasteners for installation (see caution below). We recommend that the SV-ADAHRS-200/201 or SV-MAG-236 be a *minimum* of 2 feet (0.61 meters) from sources of magnetic fields is usually adequate; more separation, if possible, is better.

Stainless steel mounting hardware is not always non-magnetic, and thus *is not recommended*. The best type of mounting hardware (screws, bolts, washers, AND nuts) to install the SV-ADAHRS-200/201 (if SV-MAG-236 is not installed) is brass. If SV-MAG-236 is installed, then type of mounting hardware used for the SV-ADAHRS-200/201 is not critical.

If you use a magnet to test whether possible interfering materials are non-magnetic, do not actually touch the magnet to the material you are testing, as this contact can cause the material you are testing to become magnetized.

Survey the proposed SV-ADAHRS-200/201 location with a handheld compass. Move a handheld compass throughout the space surrounding your intended location to get a rough idea of the suitability of the area. Note that this test should be done with major aircraft systems operating (e.g., strobe lights and radios on) because some systems can cause magnetic interference. If the compass needle deviates significantly from magnetic North or cycles back and forth, the location is not ideal for ADAHRS installation (if an SV-MAG-236 is not installed).

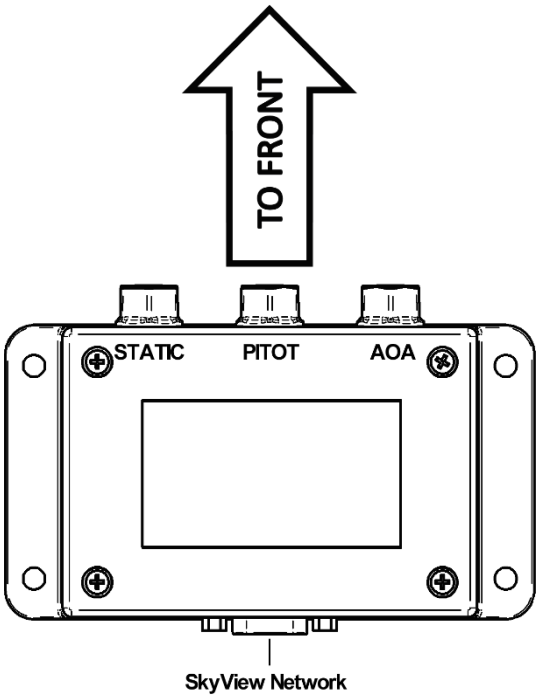

Figure 47 – ADAHRS Installation Orientation

Mounting requirements for the SV-ADAHRS-200/201:

- Must be mounted within one degree of parallel to all three aircraft axes,
- The pneumatic fittings must face toward the front of the aircraft,
- The mounting tabs must be towards the bottom of the aircraft, with the label towards the top of the aircraft.

Figure 47 – ADAHRS Installation Orientation above shows the correct orientation of the ADAHRS as it would appear if you were above the aircraft, looking down at it. The module will not operate properly if it is rotated or inverted in any other orientation.

There are no module-to-module proximity requirements when installing multiple SV-ADAHRS-200/201 modules in an aircraft. For example, an SV-ADAHRS-201 may be installed on top of a SV-ADAHRS-200 (most easily accomplished using the Dynon Avionics Dual ADAHRS Mounting Kit (P/N 102532-000). Other installation location requirements still apply.

The ADAHRS installation location should also adhere to the following requirements:

- Avoid locations that are lower than the lowest point in the AOA/Pitot/Static system to reduce the chance of allowing moisture to enter the module.
- Avoid locations that are subject to severe vibration.
- Avoid locations that are subject to rapid changes in temperature.
- Avoid locations that are subject to extreme humidity.
- Leave ample working room for electrical and pneumatic connections.

Table 15 – SV-ADAHRS-200/201 Inputs and Sensors describes which sensors and inputs are used to generate displayed instruments.

Displayed Instrument	GPS	Pitot	Static	AOA	Internal Magnet-ometer	Remote Magnet-ometer	Rate Sensors	Accel-erometer	OAT
Airspeed		✓	✓						
Altitude			✓						
Angle of Attack (AOA)		✓		✓					
Attitude * GPS used only during Pitot failure	✓*	✓	✓				✓	✓	
Ball								✓	
Density Altitude (DA)									✓
Flight Path Marker (Internal Magnetometer)	✓		✓	✓	✓		✓	✓	
Flight Path Marker (External Magnetometer)	✓		✓	✓		✓	✓	✓	

Displayed Instrument	GPS	Pitot	Static	AOA	Internal Magnet-ometer	Remote Magnet-ometer	Rate Sensors	Accel-erometer	OAT
Ground Speed (GND)	✓								
Heading (HDG) (Internal Magnetometer)		✓	✓		✓		✓	✓	
Heading (HDG) (External Magnetometer)		✓	✓			✓	✓	✓	
Heading (HDG) (Magnetometer Fail)	✓	✓	✓				✓	✓	
Synthetic Vision (Internal Magnetometer)	✓	✓	✓		✓		✓	✓	
Synthetic Vision (External Magnetometer)	✓	✓	✓			✓	✓	✓	
True Airspeed (TAS)		✓	✓						✓
Turn Rate		✓	✓				✓	✓	
Winds (Internal Magnetometer)	✓	✓	✓		✓				✓
Winds (External Magnetometer)	✓	✓	✓			✓			✓

Table 15 – SV-ADAHRS-200/201 Inputs and Sensors

Figure 48 – SV-ADAHRS-200/201 Mounting Dimensions with Electronic and Pneumatic Connections below shows the important mounting dimensions of the ADAHRS module with electronic and pneumatic connections. Note that the figure applies to both the SV-ADAHRS-200 and SV-ADAHRS-201 modules.

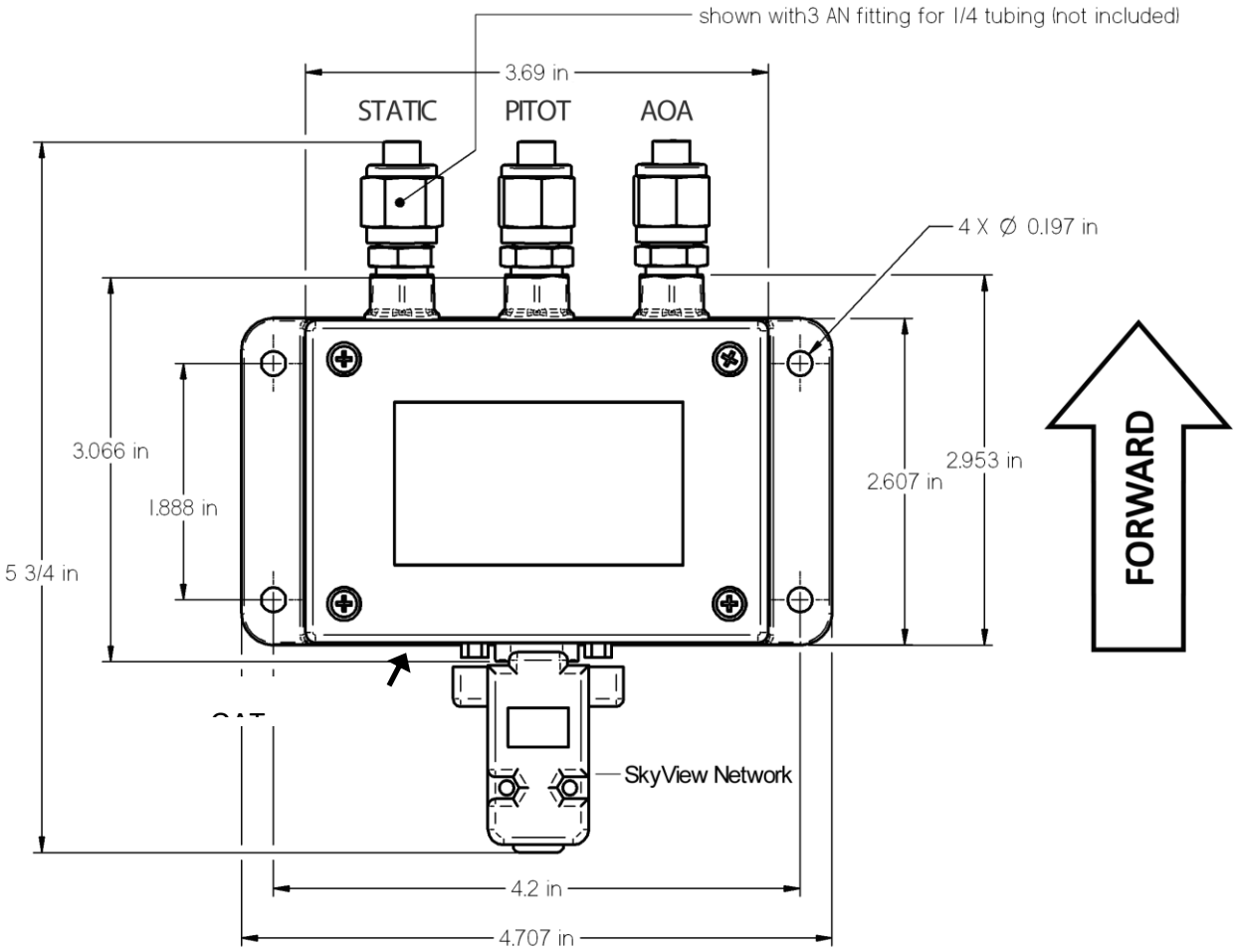

Figure 48 – SV-ADAHRS-200/201 Mounting Dimensions with Electronic and Pneumatic Connections

An SV-ADAHRS-200/201 should be mounted within one degree of parallel to all three aircraft axes, with the pneumatic fittings facing toward the front of the aircraft.

To ensure that the Slip/Skid Ball will be displayed as centered during flight, the SV-ADAHRS-200/201 must be installed to 0° (absolute level). *There is no adjustment in SkyView to electronically level the SV-ADAHRS-200/201.* If, after installation, the Slip/Skid Ball is not centered, you will need to shim the SV-ADAHRS-200/201 to be 0° (absolute level). During installation, it may be necessary to use an electronic level as a "spirit" or "bubble" level may not be able to display an accurate enough degree of level.

The module's mounting tabs must be on the bottom. The label must be on the top. Figure 48 shows the correct orientation of the ADAHRS as it would appear if you were above the aircraft, looking down at it. The module will not operate properly if it is rotated or inverted in any other orientation.

Mounting hardware is not provided with the SV-ADAHRS-200/201. The mounting tabs on each side of the module have holes sized for #10 fasteners, but it is up to the installer to decide how the SV-ADAHRS-200/201 will be secured to the aircraft.

We recommend the use of button-head style non-ferrous (brass recommended) fasteners in this location. Follow recommended torque practices when tightening the mounting hardware. *Do not rivet the SV-ADAHRS-200/201 to the aircraft as this will hinder future removal if necessary.*

Do not use a magnetic driver when installing the SV-ADAHRS-200/201. Doing so has the potential to affect the factory magnetic calibration.

If you are installing an SV-ADAHRS-200 and SV-ADAHRS-201 using the Dynon Avionics Dual ADAHRS Mounting Kit, follow the installation instructions below (Figure 49).

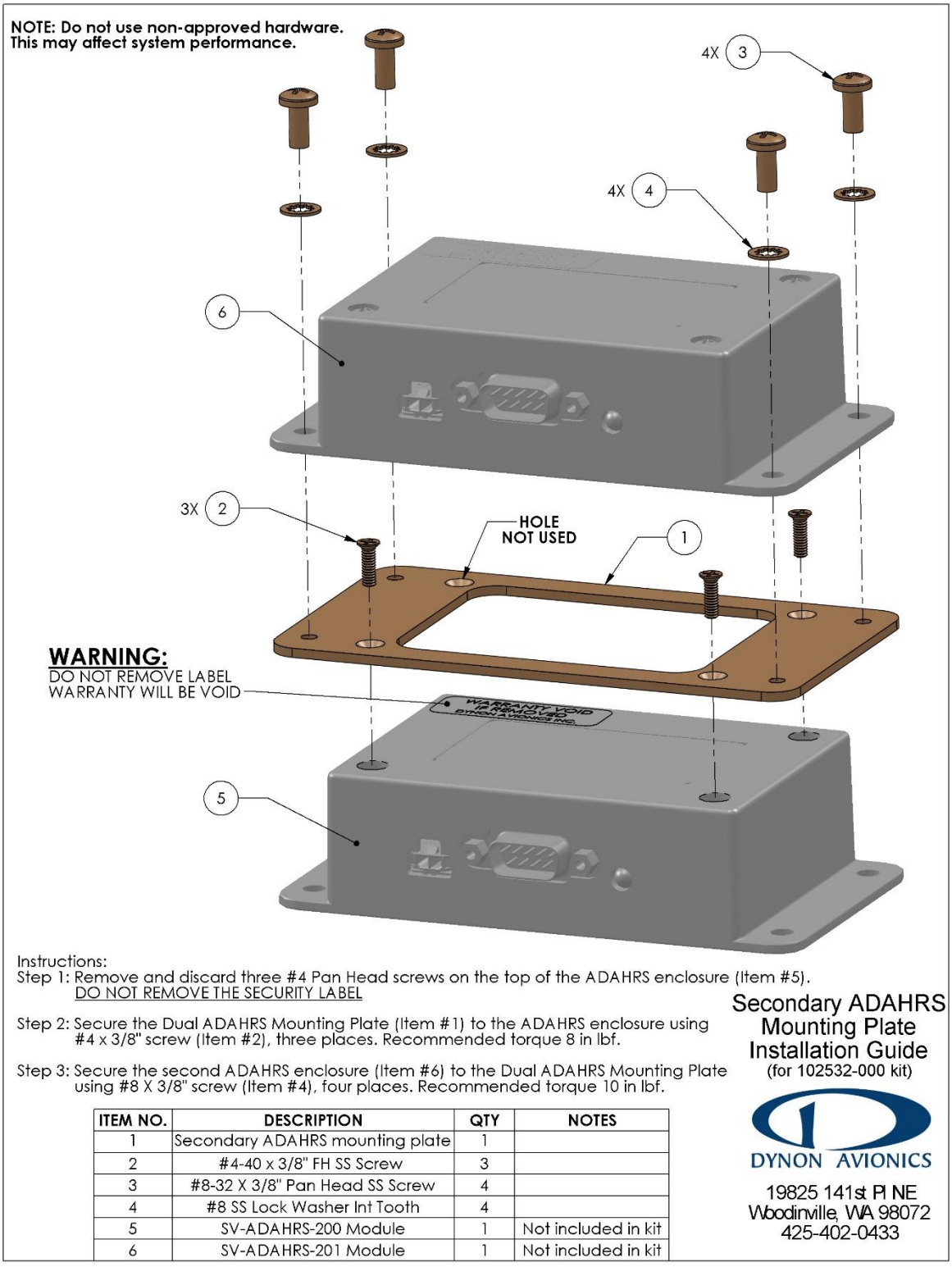

ITEM NO.	DESCRIPTION	QTY	NOTES
1	Secondary ADAHRS mounting plate	1	
2	#4-40 x 3/8" FH SS Screw	3	
3	#8-32 X 3/8" Pan Head SS Screw	4	
4	#8 SS Lock Washer Int Tooth	4	
5	SV-ADAHRS-200 Module	1	Not included in kit
6	SV-ADAHRS-201 Module	1	Not included in kit

Figure 49 – Dual ADAHRS Mounting Kit Instructions

SkyView Network Connection

Connect the SV-ADAHRS-200/201 to the SkyView network using the hardware mentioned in the SkyView System Construction Section or using equivalent hardware.

If you have to install a connector on the end of a network cable, insert all pins into the D9 connector. Refer to Appendix C: Wiring and Electrical Connections for details on connector pinouts and wire colors.

Remember to configure the network as described in the Network Setup and Status section after connecting all modules to a display.

Pneumatic Ports

The AOA, pitot, and static ports on the SV-ADAHRS-200/201 are equipped with 1/8" NPT Female fittings. If you are *not* using the Dynon Avionics Pitot/Static/AOA Pneumatic Installation Kit (P/N 102628-000) (which includes the required parts) to connect your pitot and static lines to the SV-ADAHRS-200/201, you must use standard 1/8" NPT male fittings at the end of each of the pneumatic lines.

SkyView's attitude calculation requires airspeed from pitot and static. A GPS source can be used as a backup if the pitot and/or static source fails, but should not be the primary source.

If you do not have a SV-MAG-236 Remote Magnetometer installed, do not use ferrous pneumatic fittings to connect to the SV-ADAHRS-200/201. Such fitters would cause magnetic interference to the internal magnetometer in the SV-ADAHRS-200/201).

If you do not install a Dynon Avionics AOA/Pitot Probe, and thus will not be using the Angle of Attack (AOA) port on the SV-ADAHRS-200/201, it is acceptable to leave the red plastic plug that the unit was shipped with in place. It is not necessary to seal this port against atmospheric pressure (a non-vented plug) nor adding sealant or tape to the threads of the red plastic plug. Note that there is a small hole in the red plastic plug that allows the port to be vented to atmosphere to allow for internal diagnostics of the AOA port.

Instructions for installing the Dynon Avionics Pitot/Static/AOA Pneumatic Installation Kit are found in the Accessory Installation and Configuration section,

Pitot/Static/AOA Pneumatic Installation Kit

To install, simply connect your static and pitot sources to the SV-ADAHRS-200/201. If you are performing a retrofit installation, consider "teeing" off of existing lines using a tee fitting. Reference the sticker on top of the respective module for pneumatic port identification.

Use a wrench to secure the mating pressure line fittings to the corresponding locations on the SV-ADAHRS-200/201. Do not over-tighten.

If you purchased a Dynon Avionics AOA/Pitot Probe, note that it has pitot and AOA ports, but no static port (a static port *is* included with the AOA, Pitot, Static Plumbing Kit). If you do not purchase the Dynon Avionics AOA, Pitot, Static Plumbing Kit, you will need to provide your own source of static pressure for the SV-ADAHRS-200/201.

If you have more than one ADAHRS in your SkyView system, all ADAHRS calibrations are applied to all ADAHRS simultaneously. In other words, you generally only need to go these steps once per system, provided all ADAHRS are calibrated, installed and are connected via SkyView Network. However, if an additional SV-ADAHRS-200/201 is installed and configured at a time after the original installation and calibrations in this section have been performed, all setup and calibration steps in this section of the SkyView Installation manual should be performed as if the ADAHRS is being installed for the first time.

Compass Calibration

Dynon Avionics calibrates every SV-ADAHRS-200/201 during manufacture. After the aircraft build is complete, an in-aircraft compass calibration must be performed. Until the on-ground or the in-flight compass calibration is performed, SkyView will display a Caution message: NEED COMPASS CAL. The compass calibration procedure will calibrate all SV-ADAHRS-200/201s in the SkyView network.

Performing an In-flight Compass Calibration after the On-ground Compass Calibration can increase the accuracy of the compass' magnetic heading. The best compass performance will be achieved by perform the on-ground compass calibration, then performing the in-flight compass calibration. It is not required that the in-flight compass calibration be performed immediately after the on-ground compass calibration.

The on-ground compass calibration requires pointing the aircraft in four directions and acquiring data at each direction. An accurate method of aligning the aircraft with magnetic North, East, South, and West, such as an airport's compass rose, is required. *During the compass calibration, the aircraft's configuration and major systems should be in a state that resembles flight conditions (i.e., the canopy should be closed, the aircraft's pitch attitude matches SkyView's attitude depiction, the engine should be running, and all electronic devices used in flight should be on).*

Tail wheel equipped aircraft can be calibrated in their normal nose up ground attitude as long as the SkyView attitude display shows the correct corresponding nose up attitude.

A working GPS receiver with a view of the sky to acquire GPS data must be connected to the SkyView system in order to perform a compass calibration. SkyView uses GPS-derived position information to calculate magnetic intensity, declination, and variation.

During the on-ground compass calibration it is important to perform the compass calibration in an area that has been verified to be magnetically neutral. The presence of steel reinforcement (rebar), electrical power lines under the tarmac, or other natural deposits of ferrous metals can result in an inaccurate compass calibration. Airport compass roses are usually verified to be magnetically neutral and thus are often a good location for performing a compass calibration.
For more information on this issue see FAA Notice Number: NOTC4031:
https://www.faasafety.gov/files/notices/2012/Aug/CAUTION_TLP_031612_Rev10.pdf

On-ground Compass Calibration Procedure:

1. Turn on the SkyView system and allow it to warm up for a minimum of 5 minutes.
2. Move the aircraft into position so that it is convenient to orient it in the four cardinal directions.
3. Enter the Setup Menu on the SkyView display and go to the Compass Calibration Wizard (SETUP MENU > HARDWARE CALIBRATION > ADAHRS CALIBRATION > COMPASS CALIBRATION). Note - GPS data on the Compass Calibration Page must be green. If it is red, GPS data is not valid.
4. Orient the aircraft to North, South, East, or West.
5. When the aircraft is stable at the chosen orientation, push the button indicating the direction the aircraft is oriented in. Example – when the aircraft is pointed North, push the NORTH button.
6. Wait for data collection to reach 100%.
7. Rotate to the next cardinal direction and repeat steps 4, 5, and 6 for any remaining headings.
8. If there is a SV-ADAHRS-200 and SV-ADAHRS-201 installed, the Compass Calibration is performed simultaneously. If the Compass Calibration fails on only one of the units, a message will appear:
   CALIBRATION FAILED – S/N xxxx
9. CALIBRATION COMPLETE appears when calibration is complete. Press FINISH to return to menu navigation mode.

In-flight Compass Calibration Procedure:

The in-flight compass calibration should be conducted on a clear, VFR day. Before commencing the compass calibration, ensure that you have adequate altitude, clear weather, no traffic, no obstructions in the flight path, great visibility, no airspace conflicts, etc. It is recommended that clearing turns be performed before executing each procedure.

It is recommended that you bring someone along for the in-flight compass calibration procedure. At times the pilot's attention will be divided between documentation, configuring SkyView, and maintaining situational awareness.

Confine the flying for the in-flight compass calibration to a specific area to minimize variations in the earth's magnetic field during the calibration process (IE, don't combine the in-flight compass calibration with a cross-country flight).

While the in-flight compass calibration is optional, it will likely improve the dynamic performance of the heading indications in many aircraft. It is especially recommended in aircraft where the SV-ADAHRS-200/201 was, by necessity, installed in an area of the plane that was not entirely clear of magnetic interference. This is particularly true in steel framed aircraft.

The best compass performance will be achieved by performing the in-flight compass calibration *after the on-ground compass calibration has been performed*.

1. If you have two SkyView displays, the in-flight compass calibration can be performed from either display.
2. After observing the cautions above, push buttons 7+8 to enter the IN FLIGHT SETUP MENU. Note – this menu is not accessible while on the ground.
3. Select COMPASS CALIBRATION
4. Right-click the knob to enter the in-flight COMPASS CALIBRATION menu. You will see a screen similar to this:

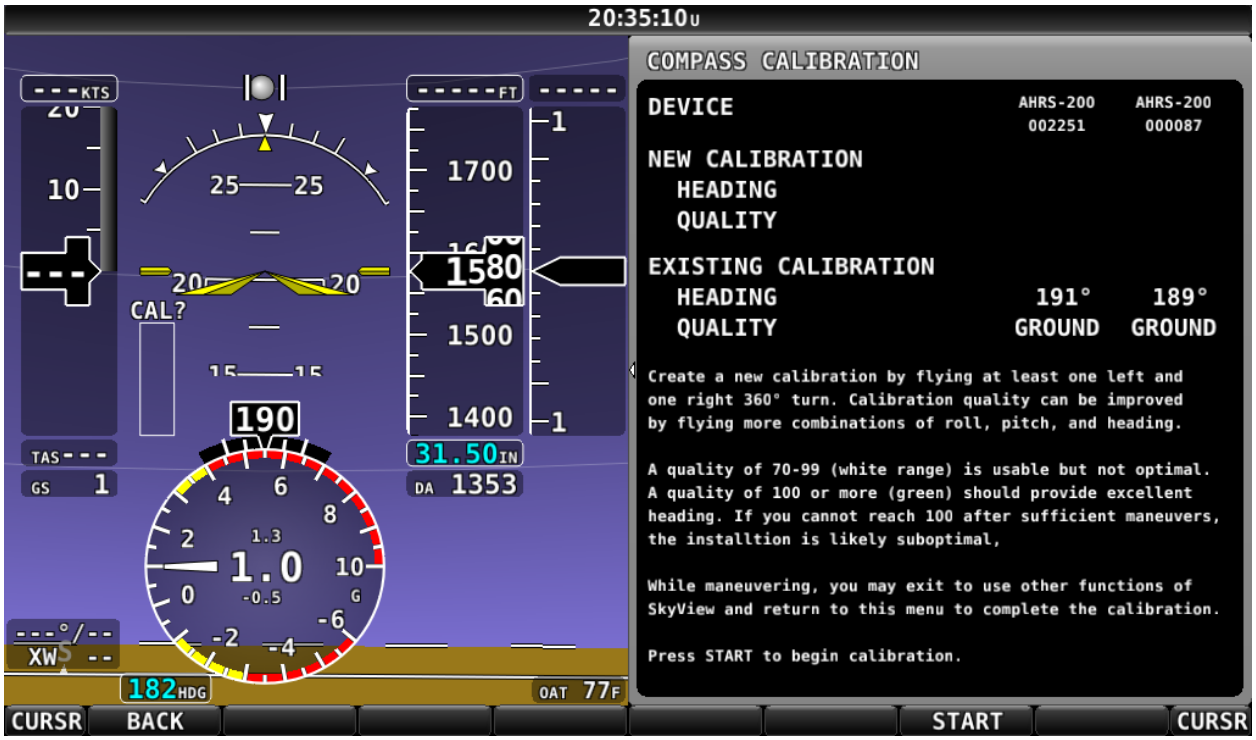

Figure 50 – In-flight Compass Calibration Menu

5. Push the START button to begin the calibration.
6. Observe the NEW CALIBRATION section of the menu. The goal of the in-flight compass calibration is to achieve a compass calibration "quality" of at least 100.
7. The minimum maneuvers for in-flight compass calibration is one 360° turn clockwise, and one 360° turn counterclockwise. Flying additional maneuvers incorporating pitch and roll changes will likely improve the in-flight compass calibration.
8. When the quality is as high as you can obtain (above 70, the minimum), push the FINISH button to complete the in-flight compass calibration. Flying additional maneuvers beyond the minimum may improve the in-flight compass calibration, but will not make it worse.

QUALITY of 70-99 is acceptable, but not optimum; the accuracy of your magnetic heading may not be acceptable. Additionally, a sub-optimal QUALITY may have the following effects:

- Degraded performance of the SkyView Autopilot (AP) in HDG and NAV modes
- Degraded accuracy of wind direction and velocity

If, after multiple attempts at in-flight compass calibration, you cannot achieve QUALITY of at least 70, the compass sensor in the SV-ADAHRS-200/201 cannot sense the earth's magnetic field with enough precision (excessive magnetic interference). It should be considered to change the location of the SV-ADAHRS-200/201.

SV-OAT-340 Location and Installation

The SV-OAT-340 is designed specifically to work with the SV-ADAHRS-200/201 and SV-MAG-236.

For full redundancy, a second ADAHRS module requires its own OAT sensor.

Sensor Location

The SV-OAT-340 is an outside air temperature sensor. In order for it work properly, it must be able to measure air temperature accurately. Avoid exposing the sensor to sources of heat that would interfere with outside air temperature readings such as:

- Direct sunlight
- Engine heat and exhaust
- Aircraft interior (back side of sensor)
- Heated air from the cabin exiting from an open window or cabin air exhaust port

The installation area should have space for a nut and wires on the back side of the sensor. It is acceptable to extend or reduce the wire length if necessary. Reduce the wire length by cutting out the desired length from the middle of the wires and splicing together the remaining ends.

If there is a backup ADAHRS in the SkyView system, it is acceptable to install a backup OAT sensor a few inches away from the primary sensor. Consider running primary and backup OAT sensor wiring together. Tape sensor wire pairs together to avoid confusion later.

Installation

The following tools and materials are required for SV-OAT-340 installation:

- SV-OAT-340
- SV-ADAHRS-200/201
- Drill with 3/8” drill bit
- 9/16” wrench

Do not insert the pins on the ends of the OAT sensor wires into the included connector housing until you are done running sensor wiring through the aircraft.

The SV-OAT-340 connector is small and easily lost. One technique to avoid losing this connector is to temporarily tape it to the top of the SV-ADAHRS-200/201 until it’s time to insert the wires into the connector.

The following procedures apply to the both the primary and backup sensors.

On the outside of the fuselage:

1. Drill a 3/8” hole at the installation location.
2. Feed the wires of the sensor through the hole.
3. Feed the body of the sensor through the hole.

On the inside of the fuselage (consider getting assistance for some of the steps below because it may be difficult to be simultaneously on the inside and outside of the fuselage):

1. Feed the nylon washer over the cable.
2. Feed the nylon nut over the cable.
3. Feed the nylon washer over the body of the sensor.
4. Hand-thread the nylon nut onto the threaded body of the sensor. *At this point, the nylon washer should be sandwiched between the nylon nut and the inside of the fuselage.*
5. Carefully tighten the nut using the 9/16" wrench.
6. Route and secure the sensor wires to the location of the ADAHRS module. Keep wires away from radios, ignition, and other noisy electronics.
7. Carefully insert the pins on the wires into the connector housing. Pins are not polarized and lock into place when inserted correctly.
8. Connect the sensor to the ADAHRS module.

If the OAT sensor is installed correctly, there should be an outside air temperature reading on the PFD.

Adjusting OAT Offset

SkyView provides the ability to adjust the displayed OAT +/- 20F (11.1C). This adjustment is applied across the OAT's entire temperature range. This adjustment can be made under SETUP MENU >HARDWARE CALIBRATION > ADAHRS CALIBRATION > OAT OFFSET.

Dynon Avionics D10/D100 Series OAT Sensors

If your aircraft already has a Dynon Avionics OAT installed from an older Dynon Avionics product, and you do not want to reinstall the SV-OAT-340 in its place (difficult access, etc.), it is possible to use the older OAT with SkyView. Cut off as much wire as needed from the SV-OAT-340 - you will use the White w/Black wires with pins pre-crimped, and the connector.

- If your plane has a Dynon Avionics 100433-000 OAT installed (typically connected to the 37-pin EMS connector, two White w/Black Stripe wires), simply connect either White w/Black Stripe wire on the installed OAT with one of the wires from the SV-OAT-340. The OAT is not polarity-sensitive.
- If your plane has a Dynon Avionics 100433-001 OAT installed (typically connected to the EDC-D10A remote compass, shielded cable with Blue, Red, and Yellow wires):
    - Tape, heat shrink, or otherwise isolate the shield - it will not be used.
    - Tape, heat shrink, or otherwise isolate the Red wire - it will not be used.
    - Connect the Blue wire to either White w/Black Stripe wire (not polarity sensitive)
    - Connect the Yellow wire to the other White w/Black Strip wire (not polarity sensitive) from the SV-OAT-340.

PFD-Related Settings

Once the physical ADAHRS installation is complete, it may be necessary to configure PFD-related ADAHRS settings for the SkyView system. *All ADAHRS settings are automatically shared between displays in multi-display systems.*

Aircraft Icon

The airplane symbol at the center of the compass rose on the PFD Page, and the center of MAP Page can be changed. There are a variety of airplane types available, including “Fighter”, “Jumbo”, and “Twin”, and more. The symbol can be set in SYSTEM SETUP > AIRCRAFT INFORMATION > AIRCRAFT ICON. There is no “preview” of the symbol – change it and see how you like it in the PFD and the MAP.

Measurement Units

Set altitude, distance and speed, temperature, barometer, and pressure measurement units as detailed in the How to Configure Units Section of this guide.

ADAHRS Source Selection and Configuration

SkyView systems support multiple SV-ADAHRS-200/201 modules for redundancy and manage failure scenarios by automatically switching to backup modules should an ADAHRS completely fail.

Additionally, in the event that multiple ADAHRS disagree, the display will annunciate this with an on-screen alert that annunciates which parameter(s) are not the same on all ADAHRS. The following parameters determine which ADAHRS is nominally preferred to be used. ADAHS can also be manually disabled and enabled from this menu.

Enter the ADAHRS Source Selection Page under PFD SETUP > ADAHRS SOURCE SELECTION.

ADAHRS Status

The ADAHRS labeled ACTIVE is the one displayed on the PFD.

An ADAHRS labeled STANDBY will be used for cross-checking, but will not be displayed on the PFD in normal operating conditions.

PRIMARY / ALTERNATE ADAHRS Selection

The ADAHRS labeled PRIMARY is the one that will be preferentially chosen by SkyView as the active ADAHRS that is displayed on the PFD.
An ADAHRS labeled ALTERNATE is one that is available to be used in the event of a failure or problem with the primary ADAHRS. However, it normally won’t be chosen for display on the PFD unless the primary ADAHRS has failed or has manually been disabled.

To change which ADAHRS is the PRIMARY ADAHRS, highlight an ALTERNATE ADAHRS and press the PRIMARY button to elevate it to PRIMARY status.

To disable an ADAHRS until SkyView is next powered up, simply highlight it with the joystick and press the DISABLE button.

To see the same comparison screen that is presented when a cross-check error occurs, press the COMPARE button at the bottom of the display.

Press BACK to exit the ADAHRS Source Selection Page or press EXIT to return to the Main Menu. Either of these actions will save the ADAHRS source settings.

The SkyView system automatically switches to an alternate ADAHRS in the case of a failure.

Airspeed Limitations

Use the values on this page to set IAS tape colors. Set V-speed (e.g., stall speed in landing configuration) thresholds on the Airspeed Limitations Page (SETUP MENU > PFD SETUP > AIRSPEED LIMITATIONS). If your aircraft limitations are expressed in TAS rather than IAS, set Vne EXPRESSED AS: TAS.

If you do set Vne EXPRESSED AS: TAS, this will affect the Autopilot Pitch Axis MAXIMUM AIRSPEED.

The values on this page are default values that act as placeholders. You must adjust these values to work with your aircraft for any colors to show up on the IAS tape and also to be able to calibrate the autopilot servos.

Vertical Speed Scale

Set the vertical speed scale on the Vertical Speed Scale Page (SETUP MENU > PFD SETUP > VERTICAL SPEED SCALE).

G Meter

Go to this page (SETUP MENU > PFD SETUP > G METER) to configure the G meter.

The pop-up thresholds are G values that, when exceeded, will cause the G meter to display automatically. The G meter replaces the HSI when it is displayed. In addition to popping up automatically, the G meter can be manually toggled on and off using the PFD > G METER button. If you do not want the G meter to ever be displayed automatically, set the positive pop-up threshold value very high and the negative pop-up threshold value very low.

You can also set yellow and red cautionary ranges of the G meter here, and whether or not the max/min recorded Gs are reset at each SkyView boot-up.

SV-SYNVIS-280 (Synthetic Vision – SynVis) License

Display of Synthetic Vision (SynVis) is not supported in SkyView SE. If you intend to install and use SkyView SE, do not purchase or install an SV-SYNVIS-280 (or any other license).

SkyView displays can be purchased with or without an SV-SYNVIS-280 license pre-installed that allows Synthetic Vision to be shown. In order to display Synthetic Vision, each SkyView display must be individually licensed to display it.

To check whether a display is licensed to display Synthetic Vision, go to SETUP MENU > LOCAL DISPLAY SETUP > LICENSE, and look at the status of the SYNTHETIC VISION line. If it is licensed, Synthetic Vision will be displayed as long as SkyView has a valid GPS position signal and has the appropriate high resolution terrain database installed for the region of the world that you are flying in.

To enable Synthetic Vision on displays that do not have it pre-installed, a license that allows a single display to display Synthetic Vision can be purchased in one of two ways:

1. Call Dynon Avionics directly at 425-402-0433 with your SkyView display model (SV-D700, SV-D1000, or SV-D1000T) and serial number (as displayed on the case sticker, or in SETUP MENU > LOCAL DISPLAY SETUP > DISPLAY HARDWARE INFORMATION). A License Code can be purchased for the particular display you wish to enable Synthetic Vision on. This six-character License Code is then entered in SETUP MENU > LOCAL DISPLAY SETUP > LICENSE > LICENSE CODE.
2. A SkyView Synthetic Vision Certificate may be purchased from Dynon Avionics or any authorized Dynon Avionics dealer. This certificate can be redeemed for a license code that can be entered in SETUP MENU > LOCAL DISPLAY SETUP > LICENSE > LICENSE CODE to enable Synthetic Vision. To redeem a certificate simply follow the instructions on the certificate itself. Similar to the above, you will need to redeem your certificate by visiting http://license.dynonavionics.com with your SkyView display model and serial number ready. Alternatively, you can call Dynon Avionics directly at 425-402-0433 to redeem a certificate.

Other ADAHRS Calibrations

ALTITUDE OFFSET

There is a single point altitude adjustment, located in SETUP MENU > HARDWARE CALIBRATION > ADAHRS CALIBRATION > ALTITUDE OFFSET that adjusts SkyView's barometric altimeter. This adjustment affects both the displayed altitude and the encoded altitude that is sent to other devices. It should only be adjusted if altitude is found to be incorrect (by comparing it against a known source or field elevation, *after* the BARO setting has been set to correctly to known atmospheric conditions) after SkyView has fully warmed up.

AOA CALIBRATION

If a Dynon Avionics AOA/Pitot Sensor is installed, familiarize yourself with the AOA calibration procedure before flight by reading through the instructions in the AOA Calibration Wizard: SETUP MENU > HARDWARE CALIBRATION > ADAHRS CALIBRATION > AOA CALIBRATION.

Once you are flying straight and level at a safe altitude for stalls, go into the AOA Calibration Wizard (IN FLIGHT SETUP MENU > AOA CALIBRATION…) and follow the onscreen instructions to calibrate angle of attack while in flight.

ZERO PRESSURE IAS/AOA CALIBRATION

This calibration routine samples Pitot, Static, and AOA pressures in a windless environment to allow SkyView to provide the best possible Indicated Airspeed (IAS) readings at very low airspeeds, and the best possible Angle of Attack (AOA). Ideally, perform this calibration before performing an (in-air) AOA calibration. After performing these two steps, in the future, performing a ZERO PRESSURE IAS/AOA CALIBRATION should restore both airspeed and AOA performance without requiring a full AOA calibration.

It is important that this calibration is done in an absolutely windless environment, such as a closed hangar. Additionally, before performing this calibration, cover the Pitot, Static, and AOA ports with a sock or cloth to minimize airflow WITHOUT putting any air pressure on the Pitot, Static, or AOA ports.

Performing Pitot/Static Checks

Background

Dynon Avionics SV-ADAHRS-200/201 use airspeed in the calculation of attitude (or GPS ground speed when airspeed is unavailable). The internal rate sensors are monitored and calibrated in flight using feedback from the accelerometers and from airspeed to achieve a highly accurate attitude solution.

When a pitot or static test is performed the sensors in the SV-ADAHRS-200/201 are being exposed to dynamics that are impossible to achieve in a real aircraft flight environment, namely, large airspeed changes without the accompanying accelerations and rotations. This false condition will cause a well-calibrated unit to incorrectly adjust its calibration. Furthermore, when a unit is in a test situation a change in applied pitot or static pressure will cause the attitude to pitch up or down. This is expected.

SkyView contains a special mode that allows you to perform required altimeter and/or airspeed checks without affecting the calibration of the attitude-sensing components.

Pitot/Static Test Instructions

This test must be used when performing pitot/static, transponder, or other tests that manipulate either the pitot or static pressures.

Before conducting any pitot/static testing, follow these guidelines:

1. The aircraft itself should be temperature stable. For example, if the aircraft is moved from outside in the sun to a hangar for testing, tests should not be started until the airplane has stabilized at the hangar temperature.
2. Turn SkyView on and let it warm up until the altitude reading is stabilized. This period should be at least 5 minutes, but may take longer depending on environmental conditions.

To enter pitot/static test mode, go to:

SETUP MENU > HARDWARE CALIBRATION > ADAHRS CALIBRATION > PITOT STATIC TEST MODE.

Do not fly the aircraft while in pitot/static test mode.

When pitot/static test mode is active, both the active and standby ADAHRS (if equipped) are shown side by side to allow a single test to calibrated multiple ADAHRS. The airspeed and altitude values shown in this mode are the same as you would encounter while in-flight. They are not adjusted or otherwise altered from their normal readings and behaviors.

See related procedure:

SV-XPNDR-261/262 Installation and Configuration, Performing Transponder Checks.

6. SV-MAP-270 Navigation Mapping License Purchase and Setup

Map functions are not supported in SkyView SE. If you intend to install and use SkyView SE, do not purchase or install an SV-MAP-270 (or any other license).

Note the above changes *only affect the formerly optional SV-MAP-270 and the resulting map functions* (ability to display maps and charts). Non-US aviation and obstacle databases, and US aviation charts, *must still be purchased* – see below.

To permanently enable map functions on a SkyView Classic system with Software version 3.0 through Software version 14.2, the SV-MAP-270 Navigation Mapping License must be installed on at least one SkyView display in a SkyView system. If you purchased your SkyView Classic system prior to August, 2016, the SV-MAP-27 0 is available for purchase from Dynon Avionics or any Dynon Avionics dealer. Software version 3.0 and earlier included a free trial of map functions.

In place of the unlimited free trial period that existed prior to version 3.0, SkyView Software version 3.0 through version 14.2 include a 30 flight hour trial of the Navigation Mapping License that allows you to experience map functions without purchasing an SV-MAP-270. After 30 flight hours, the MAP menu and all navigation and mapping features will not be available until an SV-MAP-270 is installed on at least one SkyView display in a SkyView system.

License Information

The SV-MAP-270 Navigation Mapping License is can be purchased from Dynon Avionics and Dynon Avionics dealers and entering it into your SkyView system. Only **one** Navigation Mapping License is needed in a SkyView system (one, two, or three SkyView displays). The SkyView Classic display with the license installed stores the license information for the entire system. In normal use, license information is shared with all displays connected via SkyView Network to allow the SV-MAP-270 to be operated on any display in the system.

Checking License Status

Display of MAP is not supported in SkyView SE. If you intend to install and use SkyView SE, do not purchase or install an SV-MAP-270 (or any other license).

To check whether a SkyView system is has a Navigation Mapping License installed, go to SETUP MENU > LOCAL DISPLAY SETUP > LICENSE, and look at the status of the MAP line. Possible license statuses include:

- LICENSED (THIS DISPLAY): The SkyView system is has a Navigation Mapping License installed. This display stores the license information and allows displays in an aircraft to also use the Navigation Mapping License.
- LICENSED - CONNECTED DISPLAY ONLINE: The SkyView system is licensed to use the Navigation Mapping License. This display is currently connected to a licensed display.

- LICENSED DISPLAY OFFLINE - XX HOURS REMAIN The SkyView system is licensed to use the Navigation Mapping License. However, the display that actually stores the license information is not currently connected. When this happens, the Navigation Mapping License will continue to operate for 30 flight hours beyond when it last saw the licensed display in the aircraft. Once the licensed display is seen again, this timer is cleared.
- NO LICENSE: No display in the SkyView system is licensed to use the Navigation Mapping License.

Features Overview

Once licensed, the following features are enabled as long as SkyView has a valid GPS position signal, the appropriate high resolution terrain database installed for the region of the world that you are flying in, and aviation database installed.

- Use of MAP menu and features, including:
    - Display of airport, airspace, obstacles, traffic, and other aviation data that is available (capabilities depend on available databases and other installed equipment).
    - Display of procedure charts, airport diagrams, enroute charts (sectionals), and other layers that can be overlaid on the map.
    - Display of basemap features, including roads, city names, railroads, rivers, and political boundaries.
    - All Navigation Mapping features available via the MAP menu.
    - Display of obstacles and runways on Synthetic Vision (if Synthetic Vision is licensed).
    - All future updates to the SV-MAP-270 Navigation Mapping License.

Purchasing and Installing a SV-MAP-270 Navigation Mapping License

Display of MAP is not supported in SkyView SE. If you intend to install and use SkyView SE, do not purchase or install an SV-MAP-270 (or any other license).

A license can be purchased and applied to your system in one of two ways:

1. Call Dynon Avionics directly at 425-402-0433 with your SkyView Classic display model (SV-D700, SV-D1000, or SV-D1000T) and serial number (as displayed on the case sticker, or in SETUP MENU > LOCAL DISPLAY SETUP > DISPLAY HARDWARE INFORMATION). An SV-MAP-270 Navigation Mapping License Code can be purchased for the entire aircraft you wish to enable the Navigation Mapping License on. This six-character License Code is then entered in SETUP MENU > LOCAL DISPLAY SETUP > LICENSE > LICENSE CODE. If you have more than one display in the aircraft, choose one to install it onto and provide information for only that display. Once any display is licensed, all connected displays in the Aircraft can use the Navigation Mapping License.
2. An SV-MAP-270 SkyView Navigation Mapping License Certificate may be purchased from Dynon Avionics or any authorized Dynon Avionics dealer. This certificate can be redeemed for a license code that can be entered in SETUP MENU > LOCAL DISPLAY SETUP > LICENSE > LICENSE CODE. To redeem a certificate simply follow the instructions on the certificate

itself. Similar to the above, you will need to redeem your certificate by visiting http://license.dynonavionics.com with your SkyView display model and serial number ready. Alternatively, you can call Dynon Avionics directly at 425-402-0433 to redeem a certificate.

Databases

Display of MAP and Synthetic Vision (SynVis) is not supported in SkyView SE. Thus, Charts, Obstacles data, Terrain data, Basemap data, and Stadium TFR data are not supported in SkyView SE. Aviation data (including a "combo" .DUC file of AVIATION + OBSTACLE) is supported in SkyView SE solely to provide data for the SV-COM-PANEL APT, ATC, ATIS, GND, and TWR buttons.

SkyView utilizes a variety of databases to display information on the moving map and present options for navigation. These include:

- Charts: Scanned or electronic versions of procedure charts, airport diagrams, and enroute charts. Seattle Avionics data available for US SkyView pilots. PocketFMS, ~~OzRunways, and~~ AvPlan EFB ~~data~~, and OzRunways available for other worldwide SkyView pilots.
- Aviation data: Airports, navigation aids, airspace, airport information, etc. Available for free for US SkyView pilots from Dynon Avionics. Jeppesen ~~and~~, PocketFMS, and AvPlan EFB data available for all other SkyView pilots worldwide.
- Obstacles data: Available for free for US SkyView pilots from Dynon Avionics. Jeppesen and PocketFMS data available for all other SkyView pilots worldwide.
- Terrain data: A high resolution terrain database is used to display the topographic map. Available worldwide for free from Dynon Avionics.
- Basemap (Cultural) data: Basemap is available for free for all SkyView pilots from Dynon Avionics worldwide.
- Stadium TFR data: Available for free for US SkyView pilots from Dynon Avionics.

Viewing Information about Installed Databases

The Installed Databases Page (SETUP MENU > LOCAL DISPLAY SETUP > INSTALLED DATABASES) allows users to see the databases installed on their equipment as well as their respective versions and expiration dates. The sections below outline the various databases that are installed in SkyView.

When viewing INSTALLED DATABASES, the sections
PROCEDURE CHARTS AND AIRPORT DIAGRAMS
FLIGHT GUIDE AIRPORT DIAGRAMS
ENROUTE CHARTS
can only display information about these databases if the USB flash drive (with the PocketFMS / Seattle Avionics chart data) is plugged in. When the USB flash drive with this data is not plugged in, these sections are blank.

For any database which has an expiration date, if the expiration date has passed,

- On a SkyView display, a popup message will appear on the MAP page as shown in Figure 51 below. This message can be cleared by pushing the MAP button and then the ACCEPT button. The popup message is then cleared for the remainder of the time SkyView is powered on. Until the database whose expiration date has passed is updated, this popup message will continue to appear each time SkyView is powered on. The initial appearance of this popup message cannot be suppressed.
  Note that in the popup message, only the *first* database that is past its expiration date is listed.
- On a SkyView SE display, a CAUTION message will be displayed in the message area (lower right corner of the display). Like any other CAUTION message, as soon the CAUTION message is acknowledged (viewed), it will no longer appear (for the duration of that power-on cycle).
- The presence, and status (including expiration dates) of all databases can be checked in the INSTALLED DATABASES page: SETUP MENU > LOCAL DISPLAY SETUP > INSTALLED DATABASES. Any database that has expired will be shown in YELLOW and appended with (EXPIRED), as shown in Figure 53 (SkyView) and Figure 54 (SkyView SE) below.
  Note that in a SkyView system with multiple displays, it is possible for each display to have different, and different versions (expiration dates) of various databases. Thus, when verifying the presence, and expiration dates, of databases, check them on each SkyView display.

Figure 51 – SkyView Database Expired Popup Message

Figure 52 – SkyView SE Aviation Database Expired Caution Message (Lower Left Corner of Display)

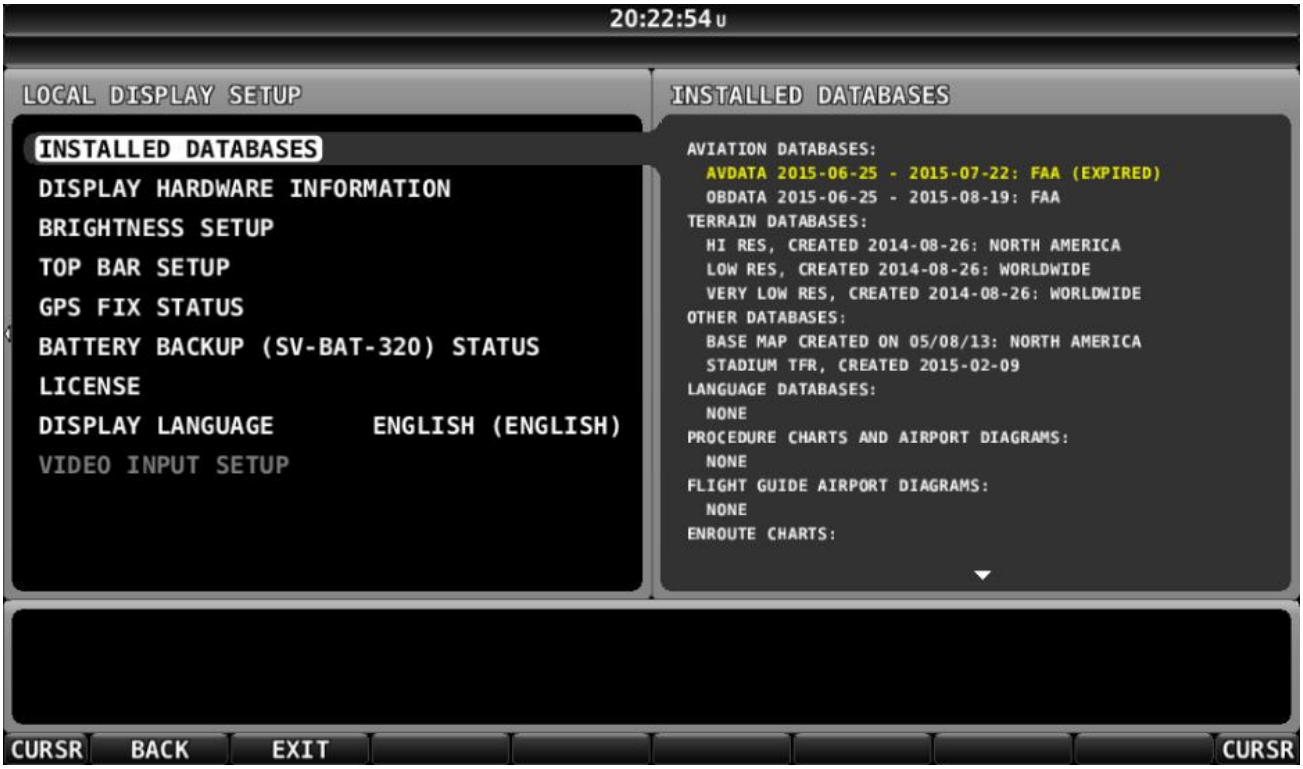

Figure 53 – SkyView INSTALLED DATABASES with Expired Database Shown in Yellow

Figure 54 – SkyView SE INSTALLED DATABASES with Expired Database Shown in Yellow

Terrain Database

Display of MAP and Synthetic Vision (SynVis) is not supported in SkyView SE. Thus, loading of Terrain databases is not necessary in SkyView SE.

SkyView uses high resolution terrain databases to display the base topographic map on the MAP page, as well as to display Synthetic Vision on the PFD page. SV-D700, SV-D1000, and SV-D1000T displays are shipped with terrain databases for North America (includes the continental United States, part of Alaska, most of Canada, Mexico, part of Central America, and the West Indies). Dynon Avionics offers downloadable high resolution terrain database files for other regions of the world on its website at http://www.dynonavionics.com/docs/terrain.html.

To update the terrain databases in a SkyView display, download the appropriate file onto a USB flash drive (a 4 GB drive is included with every SkyView display) and then reference the How to Load and Delete Files Section of this guide for instructions on how to import the file onto a SkyView display. Because the terrain databases are large, only one can be installed in a SkyView display at a time. A large USB flash drive can hold multiple terrain databases for different regions of the world. However, each region's coverage area is chosen to cover most pilots' needs without having to ever switch between regions. Loading a new high resolution terrain database will automatically delete the one previously installed on your SkyView display.

If SkyView detects that it is in an area outside of the boundaries of the high resolution terrain database currently installed on SkyView, a Caution message will be displayed:

NO HI-RES TERRAIN

This occurs most often outside North America as SkyView is (typically) shipped from the factory with a high resolution terrain database for North America. To correct this issue, install the high resolution terrain database for your region.

If you have difficulty downloading the very large regional high-resolution terrain databases using a web browser, particularly using a slow Internet connection, alternatively, you may use an "FTP" client, such as FileZilla, available at https://filezilla-project.org.

Host: dynonavionics.com
Username: anonymous
Password: (blank)

Aviation/Obstacle Databases

Display of aviation data and obstacles (on MAP) is not supported in SkyView SE. LOADING of aviation data (including a "combo" .DUC file of AVIATION + OBSTACLE) is supported in SkyView SE to solely to provide data for the SV-COM-PANEL APT, ATC, ATIS, GND, and TWR buttons.

Aviation and obstacle databases are used to display airports, runways, navigation aids, airspace, obstacles, and other aviation data on the moving map. It also makes allows SkyView to provide detailed information about aviation features. SkyView can also provide navigation to these aviation features.

US SkyView pilots – Obtaining Free Dynon Avionics Aviation and Obstacle Data

Aviation and Obstacle data is available free-of-charge for US SkyView pilots. Go to http://downloads.dynonavionics.com to download these databases to a USB flash drive. Reference the Loading Databases section of this guide below for instructions on how to import the file onto a SkyView display. Aviation data is updated every 28 days. Obstacle data is updated every 56 days.

Worldwide SkyView pilots - PocketFMS AeroData Subscriptions with Obstacles and Visual Reporting Points

AeroData is professionally maintained and updated for SkyView every 28 days, and is available as a yearly subscription including obstacles for €119. Coverage encompasses Europe, North America (including Canada), Australia, and New Zealand. It includes Aviation data (including visual reporting points) and obstacle data. As of August, 2015, enroute charts are also available from PocketFMS. To order and download PocketFMS AeroData, visit their website at http://www.pocketfms.com/Dynon Avionics

Worldwide SkyView pilots - Jeppesen NavData® and Obstacle Data Services

Aviation and Obstacle for SkyView pilots outside the US is available from Jeppesen. To purchase Jeppesen data:

- Visit http://www.JeppDirect.com/viewavionics for data subscription information from Jeppesen for your SkyView display.
- To order service, please call Jeppesen at:

U.S. & Canada	United Kingdom	Europe (except UK), Middle East, Africa and Asia	Australia
Toll-Free: 1-866-498-0213 Direct: 1-303-328-4030	Toll-Free: 0 (800) 085 5377 Direct: +44 129 384 2400	Toll-Free: 0 800 5377 3736 Direct: +49 6102 5070	Direct: +61 261 202 999

Table 16 – Jeppesen Telephone Numbers

- Reference the Loading Databases section below of this guide for instructions on how to import the file onto a SkyView display.

Additional technical support from Jeppesen can be found online at http://www.jeppesen.com/support/technical-support.jsp.

US SkyView Pilots – Stadium TFR Database

Display of MAP and Synthetic Vision (SynVis) is not supported in SkyView SE. Thus, loading of Stadium TFR Database is not necessary in SkyView SE.

In late 2014, the FAA discontinued transmission of US Stadium TFRs (Temporary Flight Restrictions) through the ADS-B system. To display Stadium TFRs on a SkyView system, concurrent with SkyView Software v13.0, Dynon Avionics began including a Stadium TFR database as part of its "Quick Packages" for US pilots. In loading any "Quick Package" since then, the Stadium TFR database will be loaded onto a SkyView system. After the Stadium TFR database is loaded, a TFR will be displayed on the MAP PG as if it was being received via ADS-B. The default opacity of the Stadium TFR database (as displayed on the MAP PG) is 100% (solid Red) but can be adjusted: MAP MENU > MAP ITEMS > TFR OPACITY.

If the Stadium TFR database is accidentally deleted from a SkyView display, contact Dynon Avionics Technical Support to obtain a replacement Stadium TFR database. The Stadium TFR database requires v13.0 Software (or later).

Charts and Airport Diagrams

Display of MAP and Synthetic Vision (SynVis) is not supported in SkyView SE. Thus, loading of Charts and Airport Diagrams is not necessary in SkyView SE.

SkyView's charting capabilities allow pilots to quickly find and display the procedures they need during flight, all while showing the aircraft's position and track right on the chart itself. With the touch of a button, SkyView automatically loads the available airport diagram while on the ground.

US SkyView pilots – Obtaining Geo-referenced Charts and Airport Diagrams, Geo-referenced US sectionals, and IFR HI and LO Charts

As of SkyView Classic Software v7.0, SkyView Classic and SkyView HDX can display geo-referenced charts and airport diagrams provided by Seattle Avionics, including over 5,000 FlightGuide diagrams and all approach plates and procedures. As of SkyView Software v10.0, SkyView Classic supports Seattle Avionics geo-referenced US sectionals and IFR HI and LO charts. Subscriptions for all Seattle Avionics data listed above for SkyView pilots are available at a special price. To order and download Seattle Avionics' SkyView ChartData, contact Seattle Avionics – call 425-806-0249 or see http://www.seattleavionics.com/ChartData/Default.aspx?TargetDevice=Dynon Avionics

European SkyView pilots – Obtaining Europe Charts and Airport Diagrams

PocketFMS' Frequent Flyer membership includes AeroData, charts (including Pooleys in the UK), airport diagrams, visual approach, landing, and area charts, costs €150 per year. This is only €31 more than the existing SkyView AeroData-only subscription (which remains available). As of August, 2015, enroute charts are also available from PocketFMS. To become a PocketFMS Member (Frequent Flyer membership), see http://www.pocketfms.com/Dynon/.

Australia / New Zealand SkyView pilots – Obtaining Australia and New Zealand Charts

SkyView Software v13.0 added support for Australia and New Zealand charts from OzRunways (https://www.ozrunways.com) and AvPlan EFB (http://www.avplan-efb.com). Please contact these companies directly for more information about the specific data they provide, pricing,

purchase / subscription options, and support on saving their data onto a USB flash drive for use with SkyView.

Base Map (Cultural Data)

Display of MAP and Synthetic Vision (SynVis) is not supported in SkyView SE. Thus, loading of Base Map (Cultural Data) is not necessary in SkyView SE.

Base Map (Cultural Data) is available free-of-charge for all SkyView pilots for SkyView pilots worldwide. The Base Map contains roads, city names, railroads, rivers, and political boundaries. Like the terrain database, it is partitioned into different regions. Download the basemap database for your region from http://downloads.dynonavionics.com to a USB flash drive. Reference the Loading Databases section below of this guide for instructions on how to import the file onto a SkyView display.

Loading Databases

1. Download database file(s) from http://downloads.dynonavionics.com, Jeppesen, or PocketFMS.
    a. If you've downloaded data from the Dynon Avionics website or PocketFMS: Copy the file onto your USB flash drive. *The file must be in the root directory of the drive in order to be recognizable by the display*
    b. If you've purchased data from Jeppesen: It is important that the Jeppesen JSUM program is used to place the Jeppesen data on the USB flash drive that will be used to load the data onto SkyView. If you manually copy Jeppesen data onto a USB flash drive, it will not load onto your SkyView system.
2. Insert the USB flash drive into one of the display's USB sockets.
3. Go to the Load Files Wizard (SETUP MENU > SYSTEM SOFTWARE > LOAD FILES…).
4. Select a file and press:
    a. LOAD to load the file onto the system.
5. Exit Setup
6. In SkyView systems that have more than one display, databases are automatically synchronized to other connected displays provided that those displays are connected via Ethernet. If they are, and you have the MAP page up on other displays, you may see a SYNCHRONIZING DATABASES message appear as this process occurs, followed by a display reboot. If you do not have your displays connected via Ethernet, simply load the database to each screen individually.

Removing Databases

SkyView automatically removes old databases when new ones are installed. Databases can also be removed manually by going to SETUP MENU > LOCAL DISPLAY SETUP > INSTALLED DATABASES. Highlight the database you wish to remove, and then press the REMOVE button.

Aviation Data updates are published periodically by Dynon Avionics, PocketFMS, and Jeppesen. It is the user's responsibility stay current with these updates and keep their equipment up to date.

7. SV-EMS-220/221 Installation and Configuration

Figure 55 – SV-EMS-220 (SV-EMS-221 is externally identical)

SkyView SE supports only one SV-EMS-220 or SV-EMS-221. If your aircraft has dual engines, or more than 7 cylinders (monitoring CHT and EGT for each), SkyView SE is not recommended. Thus, instructions for installation and configuration of a second SV-EMS-220 or SV-EMS-221 in this section is not applicable to a SkyView SE system.

This section contains information and diagrams that specifically apply to the installation of the SV-EMS-220/221 Engine Monitoring module and compatible transducers and sensors. After reading this section, you should be able to determine how to prepare an installation location, how to mount the module and its transducers and sensors, how to make all necessary electrical and transducer and sensor connections, and also how to configure the SkyView system for the installation's engine parameter sensing.

Dynon Avionics offers two engine monitor modules for SkyView. The SV-EMS-221 is only for use with the Rotax 912 iS and MW Fly (Metalwork) AEROPOWER engines. Conversely, the SV-EMS-220 cannot be used with the Rotax 912 iS or the AEROPOWER engines.

On the SV-EMS-221, pins 27, 28, 36, and 37 are used for communication with the Rotax 912 iS and AEROPOWER engines and related systems. On the SV-EMS-220, pins 27, 28, 36, and 37 are used for optional CHT/EGT inputs. Except for the different functions of Pins 27, 28, 36, and 37, the SV-EMS-220 and SV-EMS-221 are electrically and operationally identical.

The Rotax 912 iS and SV-EMS-221 combination has a unique and somewhat simplified configuration compared to other engines – see the Rotax 912 iS example section below for further details.

Support of the SV-EMS-221 with MW Fly (Metalwork) AEROPOWER engines is solely provided by MW Fly and their partner airplane manufacturers and dealers.

SkyView Classic can fully monitor CHT and EGT of all cylinders in a 9-cylinder radial engine if dual SV-EMS-220/221s are installed (up to 28 total CHTs/EGTs). Dual engines can be fully monitored by installing dual SV-EMS-220/221s. Note that for dual engine monitoring, at least two SkyView displays are required; each engine's data can only be displayed on a specific (user-

specified) SkyView display (typically, the Left Engine is displayed on the left display and the Right Engine is displayed on the right display). *Note: Only SkyView Classic provides support for dual SV-EMS-220/221 modules. SkyView SE and SkyView HDX (as of Software v15.0) do not support this feature.*

Note that Dynon Avionics provides preconfigured sensor mapping and settings files as well as premade engine sensor connection wire harnesses. These resources support many popular four and six-cylinder engine installations. Reference the Example Engine Sensor and Transducer Installations Section for examples.

Figure 56 is a high-level overview of a suggested installation, configuration, and calibration procedure for the SV-EMS-220/221 and its associated wiring, sensors, and transducers.

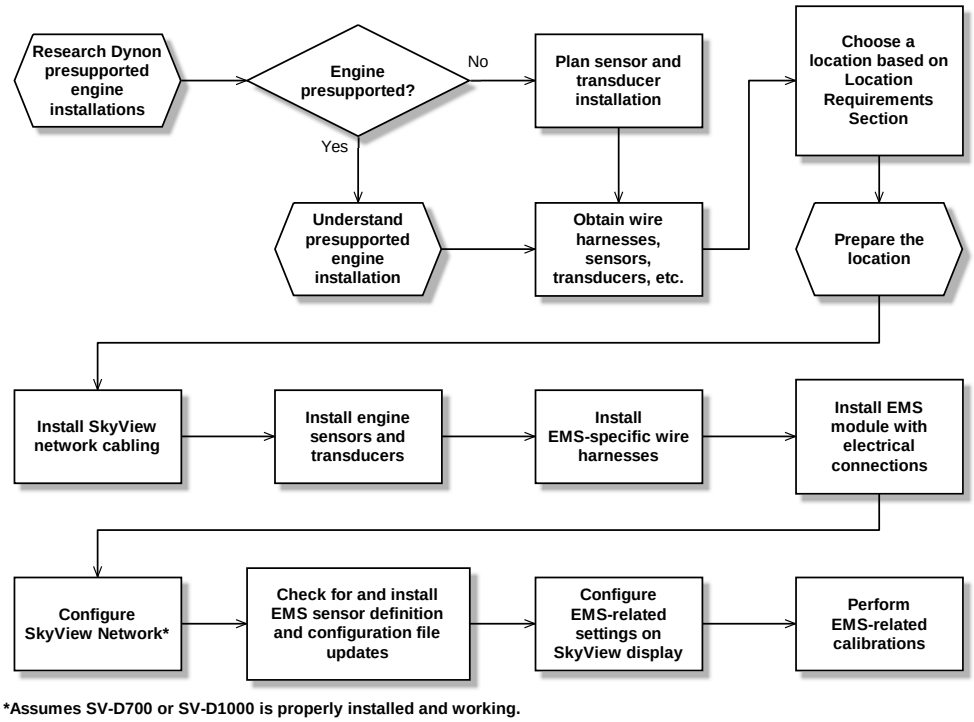

Figure 56 – Suggested SV-EMS-220/221 Installation and Configuration Procedure

Physical Installation

Observe the following guidelines when choosing a location for an SV-EMS-220/221 Engine Monitor module:

- *Do not* install on the engine side of the firewall.
- Avoid locations that are subject to severe vibration.
- Avoid locations that are subject to extreme humidity.
- Leave ample working room for electrical connections.
- Dual SV-EMS-220/221s can be used in a SkyView Network, to support:
    - Large engines that require more than the CHT/EGT inputs available on a single SV-EMS-220 (14 CHT/EGT inputs) or SV-EMS-221 (12 CHT/EGT inputs) to fully monitor the engine; a second SV-EMS-220 adds an additional 14 CHT/EGT inputs.
    - Independent monitoring of dual engines (requires two SkyView displays)
    - *Note: Only SkyView Classic supports the use of dual SV-EMS-220/221 modules; this feature is not supported in SkyView SE and SkyView HDX (as of Software v15.0).*

The diagram below shows the mounting dimensions of the EMS module with electronic connections.

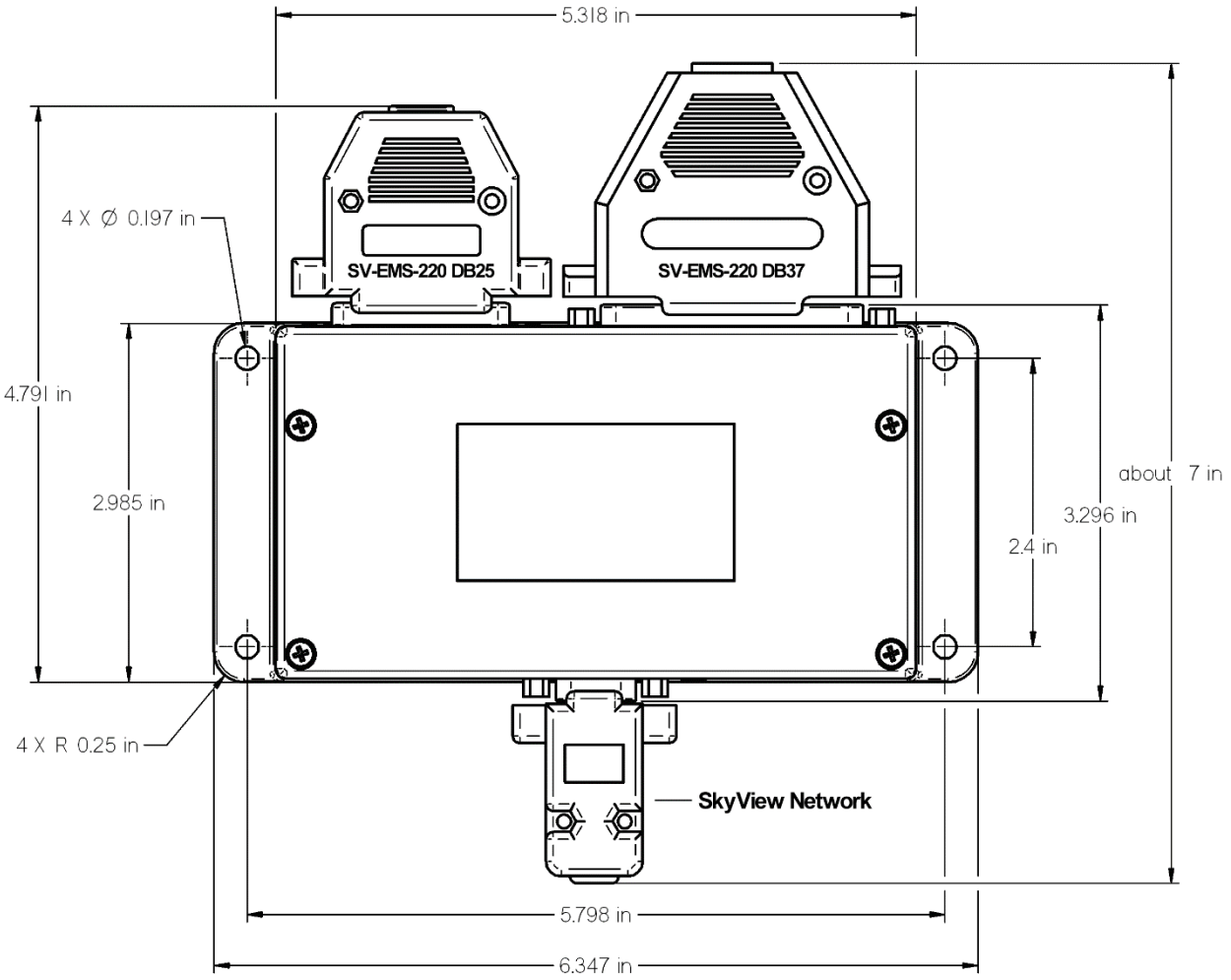

Figure 57 – SV-EMS-220/221 Mounting Dimensions with Electronic Connections

Dynon Avionics does not include mounting hardware for use with the SV-EMS-220/221. The mounting tabs on each side of the module have holes sized for #10 fasteners, but it is up to the installer to decide how the EMS will be secured to the aircraft. Use of ferrous fasteners in this location is acceptable as the EMS is not adversely affected by small magnetic fields. We recommend button head style AN hardware as spacing between the holes in the tabs and the body of the enclosure will limit what style tool can be used to tighten certain fasteners. If you will be installing dual SV-EMS-220/221s, it is acceptable to stack the two units. Follow recommended torque practices when tightening the mounting hardware. *Do not rivet the SV-EMS-220/221 to the aircraft as this will hinder future removal if necessary.*

SkyView Network Connection

If you have installed two SV-EMS-220s or two SV-EMS-221s to monitor a 9-cylinder (or more) engine or dual engines, Dynon Avionics offers the **SV-NET-SPL "Splitter" Cable** – see Figure 58. This cable allows a single (more economical, lower weight) SkyView Network Cable to be run to the location of dual SV-EMS-220/221s and then "split" the SkyView Network signals to each SV-EMS-220/221.

Figure 58 – SV-NET-SPL Cable

Connect the EMS module to the SkyView network using the hardware mentioned in the SkyView System Construction Section or using equivalent hardware.

If you have to install a connector on the end of a network cable, insert all pins into the D9 connector. Reference Appendix C: Wiring and Electrical Connections for details on connector pinouts and wire colors.

Remember to configure the network after connecting all modules to a display.

SkyView EMS Sensor Definition and Configuration Files

The SkyView EMS utilizes a file to define sensor behavior and a file to map those sensors to pins on the SV-EMS-220/221 and configure the sensors' onscreen visual representations or widgets. The sensor definition file is preloaded onto all SkyView displays during manufacture and may need to be updated. The sensor mapping and configuration file is *not* preloaded onto displays and must be downloaded and installed by the user. Reference the EMS Sensor Definitions, Mapping, and Settings Section for more information.

Engine Sensor and Transducer Planning

In order to save installers time, Dynon Avionics provides preconfigured sensor mapping and settings files as well as premade engine sensor connection wire harnesses. These resources support many popular four and six-cylinder engine installations. Reference the Example Engine Sensor and Transducer Installations Section for examples.

Sensor mapping and settings files map SV-EMS-220/221 pins to engine transducers and sensors and also configure onscreen engine gauges with appropriate graphical settings. Reference http://downloads.dynonavionics.com for more information.

The SV-EMS-220/221 is compatible with a wide range of sensors and transducers. Reference Table 101 on page 22-3 for a list of engine sensors and transducers that are known to be

compatible with SkyView. Use the tools in this section as well as the worksheet on page 24-1 when planning sensor and transducer installation.

SV-EMS-220/221 Engine Sensor Kits

Dynon Avionics offers kits of sensors and appropriate harnesses for several common engines.

Note that the Fuel Flow Sensor, P/N 100403-003 is optional; *it is not included in any Dynon Avionics Engine Sensor Kit*.

Lycoming / Continental / Superior 4 Cylinder, Carbureted: EMSKIT-L4C (P/N 103916-000 (New), 101711-000 (Legacy))

Sensor Type	Qty	Dynon Avionics P/N	Description
Amps Shunt	1	100412-000	0-60 Amps, 1mV=1A
Pressure – Fuel	1	103755-000 101690-000	Kavlico 15 PSI Fluid Pressure (New) Kavlico 0-15 PSI Fluid Pressure (Legacy)
Pressure – Manifold	1	100434-000	0” – 60” hg, 1/8” hose
Pressure – Oil	1	103757-000 101693-000	Kavlico 150 PSI Fluid Pressure (New) Kavlico 0-150 PSI Fluid Pressure (Legacy)
Temp – Carb Air	1	100468-000	1/4-28 UNF, -50°F – 150°F
Temp – CHT	4	100404-000	Type J (CHT) Thermocouple, Adjustable Bayonet 3/8-24 UNF
Temp – EGT	4	100405-000	Type K (EGT) Thermocouple, 1.00” – 2.25” Hose Clamp
Temp – Oil	1	100409-001	5/8-18 UNF, 100°F – 240°F
Wiring Harnesses			
Harness – Main Sensor	1	100399-000	All sensors but CHT and EGT, 6’
Harness – CHT/EGT	1	100399-001	4 CHT and 4 EGT, 6’

Table 17 – EMSKIT-L4C: Lycoming / Continental / Superior 4 Cylinder, Carbureted

Lycoming / Continental / Superior 4 Cylinder, Fuel Injected: EMSKIT-L4F (P/N 103916-003 (New), 101711-003 (Legacy))

Sensor Type	Qty	Dynon Avionics P/N	Description
Amps Shunt	1	100412-000	0-60 Amps, 1mV=1A
Pressure – Fuel	1	103757-000 101716-000	Kavlico 150 PSI Fluid Pressure (New) Kavlico 0-50 PSI Fluid Pressure (Legacy)
Pressure – Manifold	1	100434-000	0” – 60” hg, 1/8” hose
Pressure – Oil	1	103757-000 101693-000	Kavlico 150 PSI Fluid Pressure (New) Kavlico 0-150 PSI Fluid Pressure (Legacy)

Temp – CHT	4	100404-000	Type J (CHT) Thermocouple, Adjustable Bayonet 3/8-24 UNF
Temp – EGT	4	100405-000	Type K (EGT) Thermocouple, 1.00” – 2.25” Hose Clamp
Temp – Oil	1	100409-001	5/8-18 UNF, 100°F – 240°F
Wiring Harnesses			
Harness – Main Sensor	1	100399-000	All sensors but CHT and EGT, 6’
Harness – CHT/EGT	1	100399-001	4 CHT and 4 EGT, 6’

Table 18 – EMSKIT-L4F: Lycoming / Continental / Superior 4 Cylinder, Fuel Injected

Lycoming / Continental / Superior 6 Cylinder, Carbureted: EMSKIT-L6C (P/N 103916-001 (New), 101711-001 (Legacy))

Sensor Type	Qty	Dynon Avionics P/N	Description
Amps Shunt	1	100412-000	0-60 Amps, 1mV=1A
Pressure – Fuel	1	103755-000 101690-000	Kavlico 15 PSI Fluid Pressure (New) Kavlico 0-15 PSI Fluid Pressure (Legacy)
Pressure – Manifold	1	100434-000	0” – 60” hg, 1/8” hose
Pressure – Oil	1	103757-000 101693-000	Kavlico 150 PSI Fluid Pressure (New) Kavlico 0-150 PSI Fluid Pressure (Legacy)
Temp – Carb Air	1	100468-000	1/4-28 UNF, -50°F – 150°F
Temp – CHT	4	100404-000	Type J (CHT) Thermocouple, Adjustable Bayonet 3/8-24 UNF
Temp – EGT	4	100405-000	Type K (EGT) Thermocouple, 1.00” – 2.25” Hose Clamp
Temp – Oil	1	100409-001	5/8-18 UNF, 100°F – 240°F
Wiring Harnesses			
Harness – Main Sensor	1	100399-000	All sensors but CHT and EGT, 6’
Harness – CHT/EGT	1	100399-002	6 CHT and 6 EGT, 6’

Table 19 – EMSKIT-L6C: Lycoming / Continental / Superior 6 Cylinder, Carbureted

Lycoming / Continental / Superior 6 Cylinder, Fuel Injected: EMSKIT-L6F (P/N 103916-004 (New), 101711-004 (Legacy))

Sensor Type	Qty	Dynon Avionics P/N	Description
Amps Shunt	1	100412-000	0-60 Amps, 1mV=1A
Pressure – Fuel	1	103757-000 101716-000	Kavlico 150 PSI Fluid Pressure (New) Kavlico 0-50 PSI Fluid Pressure (Legacy)
Pressure – Manifold	1	100434-000	0” – 60” hg, 1/8” hose
Pressure – Oil	1	103757-000	Kavlico 150 PSI Fluid Pressure (New)

		101693-000	Kavlico 0-150 PSI Fluid Pressure (Legacy)
Temp – CHT	4	100404-000	Type J (CHT) Thermocouple, Adjustable Bayonet 3/8-24 UNF
Temp – EGT	4	100405-000	Type K (EGT) Thermocouple, 1.00” – 2.25” Hose Clamp
Temp – Oil	1	100409-001	5/8-18 UNF, 100°F – 240°F
Wiring Harnesses			
Harness – Main Sensor	1	100399-000	All sensors but CHT and EGT, 6’
Harness – CHT/EGT	1	100399-002	6 CHT and 6 EGT, 6’

Table 20 – EMSKIT-L6F: Lycoming / Continental / Superior 6 Cylinder, Fuel Injected

Rotax 912 ULS: EMSKIT-RTX (P/N 103916-002 (New), 101711-002 (Legacy))

Sensor Type	Qty	Dynon Avionics P/N	Description
Amps Shunt	1	100412-000	0-60 Amps, 1mV=1A
Pressure – Fuel	1	103755-000 101690-000	Kavlico 15 PSI Fluid Pressure (New) Kavlico 0-15 PSI Fluid Pressure (Legacy)
Pressure – Manifold	1	100434-000	0” – 60” hg, 1/8” hose
Pressure – Oil	1	Included on engine, not supplied by Dynon Avionics	
Temp – CHT	2	Included on engine, not supplied by Dynon Avionics	
Temp – EGT	2	100405-001	Type K (EGT) Thermocouple, 0.75” – 1.25” Hose Clamp
Temp – Oil	Included on engine, not supplied by Dynon Avionics		
Wiring Harnesses			
Harness – Main Sensor	1	100399-000	All sensors but CHT and EGT, 6’
Harness – CHT/EGT	1	100399-004	0 CHT and 2 EGT, 6’

Table 21 – EMSKIT-RTX: Rotax 912 ULS

Rotax 912 iS: EMSKIT-RTXiS (P/N 103916-007 (New), 101711-007 (Legacy))

Sensor Type	Qty	Dynon Avionics P/N	Description
Amps Shunt	1	100412-000	0-60 Amps, 1mV=1A
Fuel Flow	Sensor data provided by Rotax 912 iS ECU via CAN BUS		
Pressure – Fuel	1	103757-000 101692-000	Kavlico 150 PSI Fluid Pressure (New) Kavlico 0-75 PSI Fluid Pressure (Legacy)
Pressure – Manifold	Sensor data provided by Rotax 912 iS ECU via CAN BUS		
Pressure – Oil	Sensor data provided by Rotax 912 iS ECU via CAN BUS		
Temp – Coolant	Sensor data provided by Rotax 912 iS ECU via CAN BUS		
Temp – EGT (1-4)	Sensor data provided by Rotax 912 iS ECU via CAN BUS		
Temp – Oil	Sensor data provided by Rotax 912 iS ECU via CAN BUS		

Voltage – Lane A Bus	Sensor data provided by Rotax 912 iS ECU via CAN BUS		
Voltage – Lane B Bus	Sensor data provided by Rotax 912 iS ECU via CAN BUS		
Wiring Harnesses			
Harness – Main Sensor	1	100399-000	All sensors but CHT and EGT, 6’

Table 22 – EMSKIT-RTXiS: Rotax 912 iS

Jabiru 2200: EMSKIT-J22 (P/N 103916-005 (New), 101711-005 (Legacy))

Sensor Type	Qty	Dynon Avionics P/N	Description
Amps Shunt	1	100412-000	0-60 Amps, 1mV=1A
Pressure – Fuel	1	103755-000 101690-000	Kavlico 15 PSI Fluid Pressure (New) Kavlico 0-15 PSI Fluid Pressure (Legacy)
Pressure – Oil	1	Included on engine, not supplied by Dynon Avionics	
Temp – CHT	4	100578-000	Type J (CHT) Thermocouple, 12mm Ring Terminal
Temp – EGT	4	100405-002	Type K (EGT) Thermocouple, 1.00” – 1.75” Hose Clamp
Temp – Oil	Included on engine, not supplied by Dynon Avionics		
Wiring Harnesses			
Harness – Main Sensor	1	100399-000	All sensors but CHT and EGT, 6’
Harness – CHT/EGT	1	100399-001	4 CHT and 4 EGT, 6’

Table 23 – EMSKIT-J22: Jabiru 2200

Jabiru 3300: EMSKIT-J33 (P/N 103916-006 (New), 101711-006 (Legacy))

Sensor Type	Qty	Dynon Avionics P/N	Description
Amps Shunt	1	100412-000	0-60 Amps, 1mV=1A
Pressure – Fuel	1	103755-000 101690-000	Kavlico 15 PSI Fluid Pressure (New) Kavlico 0-15 PSI Fluid Pressure (Legacy)
Pressure – Oil	1	Included on engine, not supplied by Dynon Avionics	
Temp – CHT	6	100578-000	Type J (CHT) Thermocouple, 12mm Ring Terminal
Temp – EGT	6	100405-002	Type K (EGT) Thermocouple, 1.00” – 1.75” Hose Clamp
Temp – Oil	Included on engine, not supplied by Dynon Avionics		
Wiring Harnesses			
Harness – Main Sensor	1	100399-000	All sensors but CHT and EGT, 6’
Harness – CHT/EGT	1	100399-002	6 CHT and 6 EGT, 6’

Table 24 – EMSKIT-J33: Jabiru 3300

UL Power 350I/350IS: Recommended Sensors (No Dynon Avionics Kit Currently Available – Purchase Individual Sensors)

Sensor Type	Qty	Dynon Avionics P/N	Description
Amps Shunt	1	100412-000	0-60 Amps, 1mV=1A
Pressure – Fuel	1	103757-000 101692-000	Kavlico 150 PSI Fluid Pressure (New) Kavlico 0-75 PSI Fluid Pressure (Legacy)
Pressure – Oil	1	103757-000 101693-000	Kavlico 150 PSI Fluid Pressure (New) Kavlico 0-150 PSI Fluid Pressure (Legacy)
Temp – Carb Air	1	100468-000	1/4-28 UNF, -50°F – 150°F
Temp – CHT	4	100404-000	Type J (CHT) Thermocouple, Adjustable Bayonet 3/8-24 UNF
Temp – EGT	4	100405-002	Type K (EGT) Thermocouple, 1.00” – 1.75” Hose Clamp
Temp – Oil	1	100409-001	5/8-18 UNF, 100°F – 240°F
Wiring Harnesses			
Harness – Main Sensor	1	100399-000	All sensors but CHT and EGT, 6’
Harness – CHT/EGT	1	100399-001	4 CHT and 4 EGT, 6’

Table 25 – Recommended Sensors for UL Power 350I/350IS

Rotax 914: Recommended Sensors (No Dynon Avionics Kit Currently Available – Purchase Individual Sensors)

Sensor Type	Qty	Dynon Avionics P/N	Description
Amps Shunt	1	100412-000	0-60 Amps, 1mV=1A
Fuel Flow			
Pressure – Fuel	1	Included on engine, not supplied by Dynon Avionics	
Pressure – Manifold	1	100434-000	0” – 60” hg, 1/8” hose
Pressure – Oil	1	Included on engine, not supplied by Dynon Avionics	
Temp – Air Box	1	Skykit Airbox Temp Sensor (1/8-27 NPT), not supplied by Dynon Avionics	
Temp – Carb Air	1	100468-000	1/4-28 UNF, -50°F – 150°F
Temp – CHT	2	Included on engine, not supplied by Dynon Avionics	
	2	Alternative CHT: 10mm Ring Type J Thermocouple, Not supplied by Dynon Avionics	
Temp – EGT	4	100405-001	Type K (EGT) Thermocouple, 1.00” – 2.25” Hose Clamp
	4	Alternative EGT: Westach 712-4D6K, Not supplied by Dynon Avionics	
	4	Alternative EGT: UMA 2B30, Not supplied by Dynon Avionics	

Temp – Oil	1	Included on engine, not supplied by Dynon Avionics	
Wiring Harnesses			
Harness – Main Sensor	1	100399-000	All sensors but CHT and EGT, 6’
Harness – CHT/EGT	Varies – choose from: 100399-004: 2 CHT (Type J), 0 EGT (Type K), or 100399-001: 4 CHT (Type J), 4 EGT (Type K)		

Table 26 – Recommended Sensors for Rotax 914

Viking: Recommended Sensors (No Dynon Avionics Kit Currently Available – Purchase Individual Sensors)

Sensor Type	Qty	Dynon Avionics P/N	Description
Fuel Flow	1	100403-003	1/4” Female NPT, 0.6 – 70 GPH
Pressure – Fuel	1	Included on engine, not supplied by Dynon Avionics	
Pressure – Fuel	1	103757-000 101716-000	Kavlico 150 PSI Fluid Pressure (New) Kavlico 0-50 PSI Fluid Pressure (Legacy)
Pressure – Manifold	1	100434-000	0” – 60” hg, 1/8” hose
Pressure – Oil	1	103757-000 101693-000	Kavlico 150 PSI Fluid Pressure (New) Kavlico 0-150 PSI Fluid Pressure (Legacy)
Temp – Carb Air	1	100468-000	1/4-28 UNF, -50°F – 150°F
Temp – CHT	2	Included on engine, not supplied by Dynon Avionics	
	2	Alternative CHT: 10mm Ring Type J Thermocouple, Not supplied by Dynon Avionics	
Temp – Coolant	1	100409-000	0 - 250°F, 1/287 NPT
Temp – EGT	4	100405-001	Type K (EGT) Thermocouple, 1.00” – 2.25” Hose Clamp
	4	Alternative EGT: Westach 712-4D6K, Not supplied by Dynon Avionics	
	4	Alternative EGT: UMA 2B30, Not supplied by Dynon Avionics	
Temp – Coolant	1	100409-000	0 - 250°F, 1/287 NPT
Temp – Oil	1	Included on engine, not supplied by Dynon Avionics	
Wiring Harnesses			
Harness – Main Sensor	1	100399-000	All sensors but CHT and EGT, 6’
Harness – CHT/EGT	Varies – choose from: 100399-004: 2 CHT (Type J), 0 EGT (Type K), or 100399-001: 4 CHT (Type J), 4 EGT (Type K)		

Table 27 – Recommended Sensors for Viking

SV-EMS-220/221 Wire Harnesses

Engine and environmental sensors and transducers are connected to the SV-EMS-220/221 via two connectors on the module: one D37M and D25F. Dynon Avionics offers premade wire harnesses which break out the pins on these connectors and it is highly recommended that installers use these wire harnesses. Table 28 below lists these wire harnesses and their respective connections to the SV-EMS-220/221.

Dynon Avionics P/N	Description	Mates with…
100399-000	EMS D37F Main Sensor Harness	SV-EMS-220/221 D37M
100399-001	EMS D25M EGT/CHT 4-cylinder Thermocouple Wire Harness	SV-EMS-220/221 D25F
100399-002	EMS D25M EGT/CHT 6-cylinder Thermocouple Wire Harness	SV-EMS-220/221 D25F
100399-004	EMS D25M EGT 2-cylinder Thermocouple Wire Harness	SV-EMS-220/221 D25F

Table 28 – Dynon Avionics EMS Wire Harnesses

A typical SV-EMS-220 installation will utilize one EMS 37-pin Main Sensor Harness and one of thermocouple wire harness. A typical SV-EMS-221 installation does not utilize a thermocouple harness. Choose a thermocouple wire harness based on the number of EGTs and/or CHTs that need to be monitored.

The EMS 37-pin Main Sensor Harness includes a 9-pin connector that is wired to pins 11 (Orange wire), 12 (Yellow wire), and 30 (Black wire). This connector is used for other Dynon Avionics products, but is not used in SkyView installations. Thus, the 9-pin connector should be removed to use these wires for connecting sensors to the SV-EMS-220. Remove the connector by cutting the three wires close to the 9-pin connector.

The EMS 37-pin Main Sensor Harness (Dynon Avionics P/N 100399-000) may be wired with blue and green wires on pins 36 and 37, respectively. If you are going to use pins 36 and 37 for a thermocouple input such as a CHT or EGT (this is not possible on the SV-EMS-221 that is used with the Rotax 912 iS, as these wires are reserved for CAN communications), the blue and green wires should be removed and replaced with the appropriate type of thermocouple wire for thermocouple functionality on pins 36 and 37. If you are not going to use these pins for a thermocouple input, the blue and green wires do not need to be removed.

All of the ground wires on the SV-EMS-220/221 D37 are interchangeable, and can be used for any sensor that requires grounding. Additionally, one of these wires needs to be grounded to the aircraft locally to provide a good ground reference for the engine sensors. We suggest using the black ground wire connected to D37 pin 3 for this purpose.

Sensor and Transducer Compatibility Key

This section is primarily intended for users with installations that are not supported in or significantly deviate from the preconfigured installation resources available from Dynon Avionics. Reference Example Engine Sensor and Transducer Installations Section for installations which have downloadable preconfigured installation resources.

This section explains how to use Table 29 – Sensor and Transducer Compatibility Level Key. There are three compatibility designations: A, B, and C. These designations are explained in the following paragraphs.

Sensor and transducer compatibility level A denotes that an SV-EMS-220/221 D37 pin labeled as “A” in Table 30 can be configured to support the vast majority of sensors and transducers used in aircraft installations, which are primarily *resistive* in nature. Sensors and transducers include contacts, fuel level, fluid pressure, fluid temperature, temperature, and position potentiometers. For example, SV-EMS-220/221 D37 pin 4 can be configured to read a resistive oil temperature sensor.

Sensor and transducer compatibility level B denotes that an SV-EMS-220/221 D37 pin labeled as “B” in Table 30 can be configured to support every sensor and transducer listed for “A” while also being compatible with 4 to 20 mA constant current source output sensors that are supported (currently only the Rotax P/N 956413 Honeywell and Rotax P/N 456180 oil pressure sensors).

Sensor and transducer compatibility level C denotes that an SV-EMS-220/221 D37 pin labeled as “C” in Table 30 can be configured to support every transducer and sensor listed for “A” while also being compatible with sensors that employ active voltage output hardware including Dynon Avionics’ Capacitance to Voltage Converter for Van’s Capacitive Plates.

If an SV-EMS-220/221 pin’s sensor config space is blank in Table 30, that means that pin has fixed functionality. This functionality is described under the Function column in the table.

Sensor and Transducer Compatibility Level	Example sensors and transducers
A	Carburetor Temperature - Dynon Avionics 2-wire – P/N 100468-000 Contacts CHT – Rotax Fluid Pressure 0-5 PSI (Kavlico) – P/N 101715-000 New Fluid Pressure 15 PSI (Kavlico) – P/N 103755-000 New Fluid pressure 50 PSI (Kavlico) – P/N 103713-000 New Fluid Pressure 150 PSI (Kavlico) – P/N 103757-000 Legacy Fluid Pressure 0-15 PSI (Kavlico) – P/N 101690-000 Legacy Fluid pressure 0-50 PSI (Kavlico) – P/N 101716-000 Legacy Fluid pressure 0-75 PSI (Kavlico) – P/N 101692-000 Legacy Fluid Pressure 0-150 PSI (Kavlico) – P/N 101693-000 Fuel Level (resistive) Fluid Temperature 1/8”-27 NPT (Dynon Avionics) – P/N 100409-000) Fluid Temperature 5/8”-18 NPT (Dynon Avionics) – P/N 100409-001 OAT (Dynon Avionics 2-wire) – P/N 100433-003 Oil Pressure – Jabiru Oil Temperature – Jabiru Oil Temperature - Rotax Position sensors – Aileron Flap, Trim
B (Pin 6)	Everything in A, plus can be connected to a 4 to 20 mA current source sensor (e.g., Rotax P/N 956413 Honeywell and Rotax P/N 456180 oil pressure sensors)
C	Everything in A, plus Dynon Avionics Capacitance to Voltage Converter for Van’s Capacitive Plates and other sensors with active voltage output hardware. Type C inputs can measure 0-5V DC, but can accept up to 15V DC continuous, 30V DC as a brief surge, without damaging the input. However, any voltage above 5V is seen as 5V.
F	Fuel Flow input
G	Ground connection for sensors
O	Power Output for sensors
RL	RPM (Tachometer) Left input
RR	RPM (Tachometer) Right input
V	Voltmeter Input (0-30V DC)

Table 29 – Sensor and Transducer Compatibility Level Key

Future Software updates may expand the scope of the compatibility levels listed in Table 29.

The tables on the following pages specify the sensor and transducer types that are supported by each pin on the D37M and D25F SV-EMS-220/221 connectors and the wire harness wire colors. Note that the only purpose of the SV-EMS-220/221 D25M wire harness is for thermocouple connections. This guide generally refers to the different variations of this as the

thermocouple harness. Each connector's table is followed by a pin insertion view (rear) diagram.

Pin	EMS 37-pin Harness Wire Color	Function	Sensor Config
1	Red	Voltmeter 1 (0 to 30 volts DC)	V
2	Yellow or Unwired	Voltmeter 2 (0 to 30 volts DC)	V
3	Black	Ground	G
4	Violet/Blue	General Purpose Input 1	A
5	Black	Ground	G
6	White/Yellow	General Purpose Input 11	B
7	White/Brown	General Purpose Input 12	A
8	Brown	Enhanced General Purpose Input 4	C
9	Brown/Blue	General Purpose Input 5	A
10	Brown/Yellow	General Purpose Input 6	A
11	Orange	General Purpose Input 7	A
12	Yellow	General Purpose Input 8	A
13	Black	Ground	G
14	Yellow	Fuel Flow Input 1	F
15	Red	Auxiliary 12 volt DC Output	O
16	Black	Ground	G
17	Black	Ground	G
18	White/Red	Auxiliary 5 volt DC Output	O
19	White/Black	Fuel Flow Input 2 (Return)	F
20	Orange/Brown	General Purpose Input 9	A
21	Orange/Blue	General Purpose Input 10	A
22	Violet/Yellow	Enhanced General Purpose Input 2	C
23	Violet/Green	Enhanced General Purpose Input 3	C
24	Orange/Green	Amps +	Amps Shunt
25	Orange/Violet	Amps -	Amps Shunt
26	Green/Red	Manifold Pressure Input	Manifold Pressure P/N 100434-000
27	Open	**SV-EMS-220:** General Purpose TC Input 1+	Thermocouple +
		SV-EMS-221: Propeller controller RPM Output	Propeller controller
28	Open	**SV-EMS-220:** General Purpose TC Input 1-	Thermocouple -
		SV-EMS-221: Propeller controller RPM Ground	Propeller controller
29	Yellow/Green	Warning Light	Optional External Alarm Indicator
30	Black	Ground	G

Pin	EMS 37-pin Harness Wire Color	Function	Sensor Config
31	White/Orange	Enhanced General Purpose Input 13	C
32	White/Green	Standard RPM Input Left	RL
33	White/Blue	Standard RPM Input Right	RR
34	Blue	Low Voltage RPM Input Left - do not connect to magneto	RL
35	Green	Low Voltage RPM Input Right – do not connect to magneto	RR
36	Blue or Unwired	**SV-EMS-220:** General Purpose TC Input 2+	Thermocouple +
		SV-EMS-221: Lane A/B – Can H (HC A Pin 6, HC B Pin 8)	Rotax 912 iS ECU
37	Green or Unwired	**SV-EMS-220:** General Purpose TC Input 2-	Thermocouple -
		SV-EMS-221: Lane A/B – CAN L (HC A Pin 5, HC B Pin 7)	Rotax 912 iS ECU

Table 30 – SV-EMS-220/221 D37M Pin-to-Sensor Compatibility

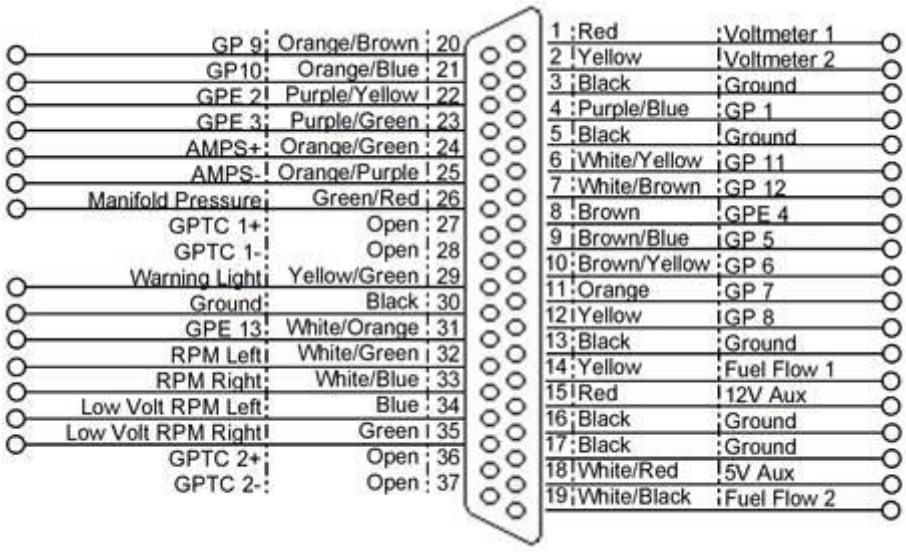

Figure 59 – SV-EMS-220 37-pin Main Sensor Harness D37F Pin Insertion View (Rear)

Pin	Rotax 912 Harness (except 912 iS) (100399-004)	4-cyl Harness (100399-001)	6-cyl Harness (100399-002)	Wire Color	Function	Sensor Config
1	Do not connect					
2			✓	Red	CHT 6	J thermocouple
3			✓	Red	EGT 6	K thermocouple
4			✓	Red	CHT 5	J thermocouple
5			✓	Red	EGT 5	K thermocouple
6		✓	✓	Red	CHT 4	J thermocouple
7		✓	✓	Red	EGT 4	K thermocouple
8		✓	✓	Red	CHT 3	J thermocouple
9		✓	✓	Red	EGT 3	K thermocouple
10		✓	✓	Red	CHT 2	J thermocouple
11	✓	✓	✓	Red	EGT 2	K thermocouple
12		✓	✓	Red	CHT 1	J thermocouple
13	✓	✓	✓	Red	EGT 1	K thermocouple
14			✓	White	CHT 6	J thermocouple
15			✓	Yellow	EGT 6	K thermocouple
16			✓	White	CHT 5	J thermocouple
17			✓	Yellow	EGT 5	K thermocouple
18		✓	✓	White	CHT 4	J thermocouple
19		✓	✓	Yellow	EGT 4	K thermocouple
20		✓	✓	White	CHT 3	J thermocouple
21		✓	✓	Yellow	EGT 3	K thermocouple
22		✓	✓	White	CHT 2	J thermocouple
23	✓	✓	✓	Yellow	EGT 2	K thermocouple
24		✓	✓	White	CHT 1	J thermocouple
25	✓	✓	✓	Yellow	EGT 1	K thermocouple

Table 31 – SV-EMS-220/221 D25F Pin-to-Sensor Compatibility

The Rotax harness only has EGTs 1 and 2 wired, as the EMS measures the Rotax-supplied resistive CHTs through its GP inputs. The four-cylinder harness only has EGTs 1 through 4 and CHTs 1 through 4 wired. On the supplied harness, each pair of wires is encased in brown insulation and labeled with corresponding cylinder number. Inside the outer insulations, each wire in the pair has the color listed in Table 31 and Figure 60.

If you make a custom thermocouple harness, note that all differential thermocouple inputs on the D25 and the D37 (SV-EMS-220 only) connectors are compatible with both J and K type thermocouples. Note that you will need to

configure SkyView to support any installations that are not already supported in the preconfigured downloadable resources.

Figure 60 is a pin insertion view (rear) of the D25M connector on the Thermocouple Wire Harness.

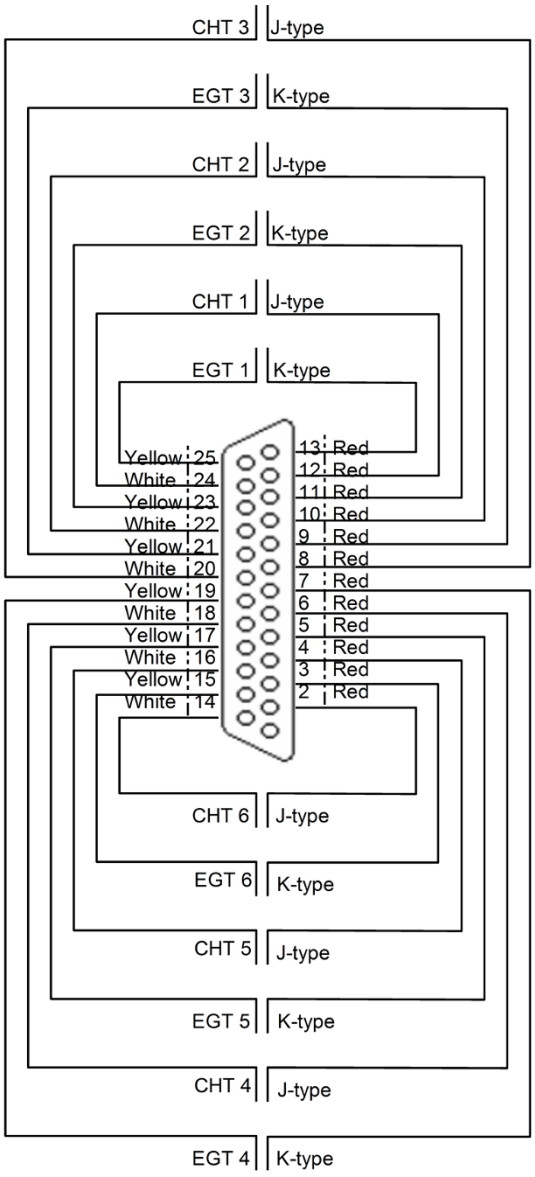

Figure 60 – Thermocouple Wire Harness D25M Pin Insertion View (Rear)

Sensors Powered by the SV-EMS-220/221

Some sensors use a 5V (pin 18; white/red wire) or 12V (pin 15; red wire) power supply provided by the SV-EMS-220/221 module. These outputs are designed to handle a limited amount of current. The typical Lycoming/Continental/Rotax/Jabiru installations as described in the rest of

this section are designed to not exceed these current limitations. However, more complex and installations that differ significantly from these standard installations should be designed to not exceed the following current limitations:

EMS Module Output	Pin	Output Current Limit	Wire Color	Current Draw of Sensors that Use This Output
12V	15	80mA	Red	FloScan Fuel Flow Sensor (100403-001): 50mA EI Fuel Flow Sensor P/N 100403-003: 15mA UMA Differential Fuel Pressure: 10mA Rotax Honeywell Oil Pressure Sensor: 20mA Rotax Oil Pressure Sensor P/N 456180: 20mA Dynon Avionics Capacitance to Voltage Converter: 25mA
5V	18	300mA (Limited by internal self-resetting fuse)	White/Red	Kavlico pressure sensors: 5mA 3rd party trim and flaps position: 5mA Manifold pressure sensor P/N 100434-000: 10mA

Table 32 – EMS Module Current Draw Limits for 12V (Pin 15) and 5V (Pin 18) Outputs

Example Engine Sensor and Transducer Installations

This section contains *example* engine sensor and transducer installations for popular engines. Each engine subsection listed on the following pages contains tables for each SV-EMS-220/221 connector and *suggests* a way to connect that engine's required sensors to the EMS module. *These tables are based on the downloadable mapping and settings files available from Dynon Avionics' support forums and may need to be modified based on your particular installation.*

Lycoming/Continental 4-cylinder Carbureted

Table 33 and Table 34 below are suggested sensor connections for a Lycoming/Continental 4-cylinder Carbureted engine connected to an SV-EMS-220 EMS module.

Pin	EMS D37F Harness Wire Color	Sensor (with Dynon Avionics P/N if applicable)
1	Red	Battery voltage (voltmeter input)
2	Yellow or Unwired	No connection
3	Black	Ground
4	Violet/Blue	Elevator position potentiometer
5	Black	Ground
6	White/Yellow	Oil pressure P/N 103757-000 (new) Oil pressure P/N 1016903-000 (legacy)
7	White/Brown	Oil temperature P/N 100409-000
8	Brown	Fuel pressure P/N 103755-000 (new) Fuel pressure P/N 101690-000 (legacy)
9	Brown/Blue	Heated AOA/Pitot Probe status (contact input)
10	Brown/Yellow	No connection
11	Orange	No connection
12	Yellow	No connection
13	Black	Ground
14	Yellow	Fuel flow P/N 100403-003
15	Red	Fuel flow power P/N 100403-003
16	Black	Ground
17	Black	Ground
18	White/Red	Manifold Pressure Sensor Power (+5 volt) / Kavlico Pressure Sensors
19	White/Black	No connection
20	Orange/Brown	Fuel level left (resistive)
21	Orange/Blue	Fuel level right (resistive)
22	Violet/Yellow	Flaps position potentiometer
23	Violet/Green	Carburetor temperature P/N 100468-000
24	Orange/Green	Ammeter shunt + P/N 100412-000
25	Orange/Violet	Ammeter shunt - P/N 100412-000
26	Green/Red	Manifold Pressure P/N 100434-000
27	Open	No connection
28	Open	No connection
29	Yellow/Green	Optional External Alarm Indicator
30	Black	No connection
31	White/Orange	No connection
32	White/Green	RPM Left (standard)
33	White/Blue	RPM Right (standard)
34	Blue	No connection
35	Green	No connection
36	Blue or Unwired	No connection
37	Green or Unwired	No connection

Table 33 – Suggested Lycoming/Continental 4-cylinder Carbureted Engine Sensor Connections for EMS D37F Harness

Pin	EMS D25M Thermocouple Harness Wire Color	Sensor (with Dynon Avionics P/N if applicable)
1	No Wire	No connection
2	No Wire	No connection
3	No Wire	No connection
4	No Wire	No connection
5	No Wire	No connection
6	Red	CHT 4 (J-type thermocouple, 100404-000)
7	Red	EGT 4 (K-type thermocouple, 100405-000)
8	Red	CHT 3 (J-type thermocouple, 100404-000)
9	Red	EGT 3 (K-type thermocouple, 100405-000)
10	Red	CHT 2 (J-type thermocouple, 100404-000)
11	Red	EGT 2 (K-type thermocouple, 100405-000)
12	Red	CHT 1 (J-type thermocouple, 100404-000)
13	Red	EGT 1 (K-type thermocouple, 100405-000)
14	No Wire	No connection
15	No Wire	No connection
16	No Wire	No connection
17	No Wire	No connection
18	White	CHT 4 (J-type thermocouple, 100404-000)
19	Yellow	EGT 4 (K-type thermocouple, 100405-000)
20	White	CHT 3 (J-type thermocouple, 100404-000)
21	Yellow	EGT 3 (K-type thermocouple, 100405-000)
22	White	CHT 2 (J-type thermocouple, 100404-000)
23	Yellow	EGT 2 (K-type thermocouple, 100405-000)
24	White	CHT 1 (J-type thermocouple, 100404-000)
25	Yellow	EGT 1 (K-type thermocouple, 100405-000)

Table 34 – Suggested Lycoming/Continental 4-cylinder Carbureted Engine Sensor Connections for EMS D25M Harness

Lycoming/Continental 4-cylinder Fuel Injected

Table 35 and Table 36 below are suggested sensor connections for a Lycoming/Continental 4-cylinder Fuel-Injected engine connected to an SV-EMS-220 EMS module.

Pin	EMS D37F Harness Wire Color	Sensor (with Dynon Avionics P/N if applicable)
1	Red	Battery voltage (voltmeter input)
2	Yellow or Unwired	No connection
3	Black	Ground
4	Violet/Blue	Elevator position potentiometer
5	Black	Ground
6	White/Yellow	Oil pressure P/N 103757-000 (new) Oil pressure P/N 101693-000 (legacy)
7	White/Brown	Oil temperature P/N 100409-000
8	Brown	Fuel pressure P/N 103757-000 (new) Fuel pressure P/N 101716-000 (legacy)
9	Brown/Blue	Heated AOA/Pitot Probe status (contact input)
10	Brown/Yellow	No connection
11	Orange	No connection
12	Yellow	No connection
13	Black	Ground
14	Yellow	Fuel flow P/N 100403-003
15	Red	Fuel flow power P/N 100403-003
16	Black	Ground
17	Black	Ground
18	White/Red	Manifold Pressure Sensor Power (+5 volt) / Kavlico Pressure Sensors
19	White/Black	No connection
20	Orange/Brown	Fuel level left (resistive)
21	Orange/Blue	Fuel level right (resistive)
22	Violet/Yellow	Flaps position potentiometer
23	Violet/Green	No connection
24	Orange/Green	Ammeter shunt + P/N 100412-000
25	Orange/Violet	Ammeter shunt - P/N 100412-000
26	Green/Red	Manifold Pressure P/N 100434-000
27	Open	No connection
28	Open	No connection
29	Yellow/Green	Optional External Alarm Indicator
30	Black	No connection
31	White/Orange	No connection
32	White/Green	RPM Left (standard)
33	White/Blue	RPM Right (standard)

34	Blue	No connection
35	Green	No connection
36	Blue or Unwired	No connection
37	Green or Unwired	No connection

Table 35 – Suggested Lycoming/Continental 4-cylinder Fuel Injected Sensor Connections for EMS D37F Harness

Pin	EMS D25M Thermocouple Harness Wire Color	Sensor (with Dynon Avionics P/N if applicable)
1	No Wire	No connection
2	No Wire	No connection
3	No Wire	No connection
4	No Wire	No connection
5	No Wire	No connection
6	Red	CHT 4 (J-type thermocouple, 100404-000)
7	Red	EGT 4 (K-type thermocouple, 100405-000)
8	Red	CHT 3 (J-type thermocouple, 100404-000)
9	Red	EGT 3 (K-type thermocouple, 100405-000)
10	Red	CHT 2 (J-type thermocouple, 100404-000)
11	Red	EGT 2 (K-type thermocouple, 100405-000)
12	Red	CHT 1 (J-type thermocouple, 100404-000)
13	Red	EGT 1 (K-type thermocouple, 100405-000)
14	No Wire	No connection
15	No Wire	No connection
16	No Wire	No connection
17	No Wire	No connection
18	White	CHT 4 (J-type thermocouple, 100404-000)
19	Yellow	EGT 4 (K-type thermocouple, 100405-000)
20	White	CHT 3 (J-type thermocouple, 100404-000)
21	Yellow	EGT 3 (K-type thermocouple, 100405-000)
22	White	CHT 2 (J-type thermocouple, 100404-000)
23	Yellow	EGT 2 (K-type thermocouple, 100405-000)
24	White	CHT 1 (J-type thermocouple, 100404-000)
25	Yellow	EGT 1 (K-type thermocouple, 100405-000)

Table 36 – Suggested Lycoming/Continental 4-cylinder Fuel Injected Sensor Connections for D25M Harness

Lycoming/Continental 6-cylinder Carbureted

Table 37 and Table 38 below are suggested sensor connections for a Lycoming/Continental 6-cylinder Carbureted engine connected to an SV-EMS-220 EMS module.

Pin	EMS D37F Harness Wire Color	Sensor (with Dynon Avionics P/N if applicable)
1	Red	Battery voltage (voltmeter input)
2	Yellow or Unwired	No connection
3	Black	Ground
4	Violet/Blue	Elevator position potentiometer
5	Black	Ground
6	White/Yellow	Oil pressure P/N 103757-000 (new) Oil pressure P/N 101693-000 (legacy)
7	White/Brown	Oil temperature P/N 100409-000
8	Brown	Fuel pressure P/N 103755-000 (new) Fuel pressure P/N 101690-000 (legacy)
9	Brown/Blue	Heated AOA/Pitot Probe status (contact input)
10	Brown/Yellow	No connection
11	Orange	No connection
12	Yellow	No connection
13	Black	Ground
14	Yellow	Fuel flow P/N 100403-003
15	Red	Fuel flow power P/N 100403-003
16	Black	Ground
17	Black	Ground
18	White/Red	Manifold Pressure Sensor Power (+5 volt) / Kavlico Pressure Sensors
19	White/Black	No connection
20	Orange/Brown	Fuel level left (resistive)
21	Orange/Blue	Fuel level right (resistive)
22	Violet/Yellow	Flaps position potentiometer
23	Violet/Green	Carburetor temperature P/N 100468-000
24	Orange/Green	Ammeter shunt + P/N 100412-000
25	Orange/Violet	Ammeter shunt - P/N 100412-000
26	Green/Red	Manifold Pressure P/N 100434-000
27	Open	No connection
28	Open	No connection
29	Yellow/Green	Optional External Alarm Indicator
30	Black	No connection
31	White/Orange	No connection
32	White/Green	RPM Left (standard)
33	White/Blue	RPM Right (standard)

34	Blue	No connection
35	Green	No connection
36	Blue or Unwired	No connection
37	Green or Unwired	No connection

Table 37 – Suggested Lycoming/Continental 6-cylinder Carbureted Sensor Connections for EMS D37F Harness

Pin	EMS D25M Thermocouple Harness Wire Color	Sensor (with Dynon Avionics P/N if applicable)
1	No Wire	No connection
2	Red	CHT 6 (J-type thermocouple, 100404-000)
3	Red	EGT 6 (K-type thermocouple, 100405-000)
4	Red	CHT 5 (J-type thermocouple, 100404-000)
5	Red	EGT 5 (K-type thermocouple, 100405-000)
6	Red	CHT 4 (J-type thermocouple, 100404-000)
7	Red	EGT 4 (K-type thermocouple, 100405-000)
8	Red	CHT 3 (J-type thermocouple, 100404-000)
9	Red	EGT 3 (K-type thermocouple, 100405-000)
10	Red	CHT 2 (J-type thermocouple, 100404-000)
11	Red	EGT 2 (K-type thermocouple, 100405-000)
12	Red	CHT 1 (J-type thermocouple, 100404-000)
13	Red	EGT 1 (K-type thermocouple, 100405-000)
14	White	CHT 6 (J-type thermocouple, 100404-000)
15	Yellow	EGT 6 (K-type thermocouple, 100405-000)
16	White	CHT 5 (J-type thermocouple, 100404-000)
17	Yellow	EGT 5 (K-type thermocouple, 100405-000)
18	White	CHT 4 (J-type thermocouple, 100404-000)
19	Yellow	EGT 4 (K-type thermocouple, 100405-000)
20	White	CHT 3 (J-type thermocouple, 100404-000)
21	Yellow	EGT 3 (K-type thermocouple, 100405-000)
22	White	CHT 2 (J-type thermocouple, 100404-000)
23	Yellow	EGT 2 (K-type thermocouple, 100405-000)
24	White	CHT 1 (J-type thermocouple, 100404-000)
25	Yellow	EGT 1 (K-type thermocouple, 100405-000)

Table 38 – Suggested Lycoming/Continental 6-cylinder Carbureted Sensor Connections for EMS D25M Harness

Lycoming/Continental 6-cylinder Fuel Injected

Table 39 and Table 40 below are suggested sensor connections for a Lycoming/Continental 6-cylinder Fuel-Injected engine connected to an SV-EMS-220 EMS module.

Pin	EMS D37F Harness Wire Color	Sensor (with Dynon Avionics P/N if applicable)
1	Red	Battery voltage (voltmeter input)
2	Yellow or Unwired	No connection
3	Black	Ground
4	Violet/Blue	Elevator position potentiometer
5	Black	Ground
6	White/Yellow	Oil pressure P/N 103757-000 (new) Oil pressure P/N 101693-000 (legacy)
7	White/Brown	Oil temperature P/N 100409-000
8	Brown	Fuel pressure P/N 103757-000 (new) Fuel pressure P/N 101716-000 (legacy)
9	Brown/Blue	Heated AOA/Pitot Probe status (contact input)
10	Brown/Yellow	No connection
11	Orange	No connection
12	Yellow	No connection
13	Black	Ground
14	Yellow	Fuel flow P/N 100403-003
15	Red	Fuel flow power P/N 100403-003
16	Black	Ground
17	Black	Ground
18	White/Red	Manifold Pressure Sensor Power (+5 volt) / Kavlico Pressure Sensors
19	White/Black	No connection
20	Orange/Brown	Fuel level left (resistive)
21	Orange/Blue	Fuel level right (resistive)
22	Violet/Yellow	Flaps position potentiometer
23	Violet/Green	No connection
24	Orange/Green	Ammeter shunt + P/N 100412-000
25	Orange/Violet	Ammeter shunt - P/N 100412-000
26	Green/Red	Manifold Pressure P/N 100434-000
27	Open	No connection
28	Open	No connection
29	Yellow/Green	Optional External Alarm Indicator
30	Black	No connection
31	White/Orange	No connection
32	White/Green	RPM Left (standard)
33	White/Blue	RPM Right (standard)

34	Blue	No connection
35	Green	No connection
36	Blue or Unwired	No connection
37	Green or Unwired	No connection

Table 39 – Suggested Lycoming/Continental 6-cylinder Fuel Injected Sensor Connections for EMS D37F Harness

Pin	EMS D25M Thermocouple Harness Wire Color	Sensor (with Dynon Avionics P/N if applicable)
1	No Wire	No connection
2	Red	CHT 6 (J-type thermocouple, 100404-000)
3	Red	EGT 6 (K-type thermocouple, 100405-000)
4	Red	CHT 5 (J-type thermocouple, 100404-000)
5	Red	EGT 5 (K-type thermocouple, 100405-000)
6	Red	CHT 4 (J-type thermocouple, 100404-000)
7	Red	EGT 4 (K-type thermocouple, 100405-000)
8	Red	CHT 3 (J-type thermocouple, 100404-000)
9	Red	EGT 3 (K-type thermocouple, 100405-000)
10	Red	CHT 2 (J-type thermocouple, 100404-000)
11	Red	EGT 2 (K-type thermocouple, 100405-000)
12	Red	CHT 1 (J-type thermocouple, 100404-000)
13	Red	EGT 1 (K-type thermocouple, 100405-000)
14	White	CHT 6 (J-type thermocouple, 100404-000)
15	Yellow	EGT 6 (K-type thermocouple, 100405-000)
16	White	CHT 5 (J-type thermocouple, 100404-000)
17	Yellow	EGT 5 (K-type thermocouple, 100405-000)
18	White	CHT 4 (J-type thermocouple, 100404-000)
19	Yellow	EGT 4 (K-type thermocouple, 100405-000)
20	White	CHT 3 (J-type thermocouple, 100404-000)
21	Yellow	EGT 3 (K-type thermocouple, 100405-000)
22	White	CHT 2 (J-type thermocouple, 100404-000)
23	Yellow	EGT 2 (K-type thermocouple, 100405-000)
24	White	CHT 1 (J-type thermocouple, 100404-000)
25	Yellow	EGT 1 (K-type thermocouple, 100405-000)

Table 40 – Suggested Lycoming/Continental 6-cylinder Fuel Injected Sensor Connections for EMS 25M Harness

Jabiru 2200

Table 41 and Table 42 below are suggested sensor connections for a Jabiru 2200 engine connected to an SV-EMS-220 EMS module.

Pin	EMS D37F Harness Wire Color	Sensor (with Dynon Avionics P/N if applicable)
1	Red	Battery voltage (voltmeter input)
2	Yellow or Unwired	No connection
3	Black	Ground
4	Violet/Blue	Elevator position potentiometer
5	Black	Ground
6	White/Yellow	Jabiru oil pressure
7	White/Brown	Jabiru oil temperature
8	Brown	Fuel pressure P/N 103755-000 (new) Fuel pressure P/N 101690-000 (legacy)
9	Brown/Blue	Heated AOA/Pitot Probe status (contact input)
10	Brown/Yellow	No connection
11	Orange	No connection
12	Yellow	No connection
13	Black	Ground
14	Yellow	Fuel flow P/N 100403-003
15	Red	Fuel flow power P/N 100403-003
16	Black	Ground
17	Black	Ground
18	White/Red	Kavlico Pressure Sensors
19	White/Black	No connection
20	Orange/Brown	Fuel level left (resistive)
21	Orange/Blue	Fuel level right (resistive)
22	Violet/Yellow	Flaps position potentiometer
23	Violet/Green	No connection
24	Orange/Green	Ammeter shunt + P/N 100412-000
25	Orange/Violet	Ammeter shunt - P/N 100412-000
26	Green/Red	No connection
27	Open	No connection
28	Open	No connection
29	Yellow/Green	Optional External Alarm Indicator
30	Black	No connection
31	White/Orange	No connection
32	White/Green	RPM Left (standard)
33	White/Blue	RPM Right (standard)
34	Blue	No connection
35	Green	No connection

36	Blue or Unwired	No connection
37	Green or Unwired	No connection

Table 41 – Suggested Jabiru 2200 Sensor Connections for EMS D37F Harness

Pin	EMS D25M Thermocouple Harness Wire Color	Sensor (with Dynon Avionics P/N if applicable)
1	No Wire	No connection
2	No Wire	No connection
3	No Wire	No connection
4	No Wire	No connection
5	No Wire	No connection
6	Red	CHT 4 (J-type thermocouple, 100404-000)
7	Red	EGT 4 (K-type thermocouple, 100405-000)
8	Red	CHT 3 (J-type thermocouple, 100404-000)
9	Red	EGT 3 (K-type thermocouple, 100405-000)
10	Red	CHT 2 (J-type thermocouple, 100404-000)
11	Red	EGT 2 (K-type thermocouple, 100405-000)
12	Red	CHT 1 (J-type thermocouple, 100404-000)
13	Red	EGT 1 (K-type thermocouple, 100405-000)
14	No Wire	No connection
15	No Wire	No connection
16	No Wire	No connection
17	No Wire	No connection
18	White	CHT 4 (J-type thermocouple, 100404-000)
19	Yellow	EGT 4 (K-type thermocouple, 100405-000)
20	White	CHT 3 (J-type thermocouple, 100404-000)
21	Yellow	EGT 3 (K-type thermocouple, 100405-000)
22	White	CHT 2 (J-type thermocouple, 100404-000)
23	Yellow	EGT 2 (K-type thermocouple, 100405-000)
24	White	CHT 1 (J-type thermocouple, 100404-000)
25	Yellow	EGT 1 (K-type thermocouple, 100405-000)

Table 42 – Suggested Jabiru 2200 Sensor Connections for EMS D25M Harness

Jabiru 3300

Table 43 and Table 44 below are suggested sensor connections for a Jabiru 3300 engine connected to an SV-EMS-220 EMS module.

Pin	EMS D37F Harness Wire Color	Sensor (with Dynon Avionics P/N if applicable)
1	Red	Battery voltage (voltmeter input)
2	Yellow or Unwired	No connection
3	Black	Ground
4	Violet/Blue	Elevator position potentiometer
5	Black	Ground
6	White/Yellow	Jabiru oil pressure
7	White/Brown	Jabiru oil temperature
8	Brown	Fuel pressure P/N 103755-000 (new) Fuel pressure P/N 101690-000 (legacy)
9	Brown/Blue	Heated AOA/Pitot Probe status (contact input)
10	Brown/Yellow	No connection
11	Orange	No connection
12	Yellow	No connection
13	Black	Ground
14	Yellow	Fuel flow P/N 100403-003
15	Red	Fuel flow power P/N 100403-003
16	Black	Ground
17	Black	Ground
18	White/Red	Kavlico Pressure Sensors
19	White/Black	No connection
20	Orange/Brown	Fuel level left (resistive)
21	Orange/Blue	Fuel level right (resistive)
22	Violet/Yellow	Flaps position potentiometer
23	Violet/Green	No connection
24	Orange/Green	Ammeter shunt + P/N 100412-000
25	Orange/Violet	Ammeter shunt - P/N 100412-000
26	Green/Red	No connection
27	Open	No connection
28	Open	No connection
29	Yellow/Green	Optional External Alarm Indicator
30	Black	No connection
31	White/Orange	No connection
32	White/Green	RPM Left (standard)
33	White/Blue	RPM Right (standard)
34	Blue	No connection
35	Green	No connection

36	Blue or Unwired	No connection
37	Green or Unwired	No connection

Table 43 – Suggested Jabiru 3300 Sensor Connections for EMS D37F Harness

Pin	EMS D25M Thermocouple Harness Wire Color	Sensor (with Dynon Avionics P/N if applicable)
1	No Wire	No connection
2	Red	CHT 6 (J-type thermocouple, 100404-000)
3	Red	EGT 6 (K-type thermocouple, 100405-000)
4	Red	CHT 5 (J-type thermocouple, 100404-000)
5	Red	EGT 5 (K-type thermocouple, 100405-000)
6	Red	CHT 4 (J-type thermocouple, 100404-000)
7	Red	EGT 4 (K-type thermocouple, 100405-000)
8	Red	CHT 3 (J-type thermocouple, 100404-000)
9	Red	EGT 3 (K-type thermocouple, 100405-000)
10	Red	CHT 2 (J-type thermocouple, 100404-000)
11	Red	EGT 2 (K-type thermocouple, 100405-000)
12	Red	CHT 1 (J-type thermocouple, 100404-000)
13	Red	EGT 1 (K-type thermocouple, 100405-000)
14	White	CHT 6 (J-type thermocouple, 100404-000)
15	Yellow	EGT 6 (K-type thermocouple, 100405-000)
16	White	CHT 5 (J-type thermocouple, 100404-000)
17	Yellow	EGT 5 (K-type thermocouple, 100405-000)
18	White	CHT 4 (J-type thermocouple, 100404-000)
19	Yellow	EGT 4 (K-type thermocouple, 100405-000)
20	White	CHT 3 (J-type thermocouple, 100404-000)
21	Yellow	EGT 3 (K-type thermocouple, 100405-000)
22	White	CHT 2 (J-type thermocouple, 100404-000)
23	Yellow	EGT 2 (K-type thermocouple, 100405-000)
24	White	CHT 1 (J-type thermocouple, 100404-000)
25	Yellow	EGT 1 (K-type thermocouple, 100405-000)

Table 44 – Suggested Jabiru 3300 Sensor Connections for EMS D25M Harness

Rotax 912 ULS Carbureted

Table 45 and Table 46 below are suggested sensor connections for a Rotax 912 ULS Carbureted engine connected to an SV-EMS-220 EMS module.

Pin	EMS D37F Harness Wire Color	Sensor (with Dynon Avionics P/N if applicable)
1	Red	Battery voltage (voltmeter input)
2	Yellow or Unwired	No connection
3	Black	Ground
4	Violet/Blue	Rotax CHT or oil (801-10-1)
5	Black	Ground
6	White/Yellow	Rotax oil pressure (Honeywell or Rotax P/N 456180)
7	White/Brown	Rotax CHT or oil (801-10-1)
8	Brown	Fuel pressure P/N 103755-000 (new) Fuel pressure P/N 101690-000 (legacy)
9	Brown/Blue	Heated AOA/Pitot Probe status (contact input)
10	Brown/Yellow	No connection
11	Orange	No connection
12	Yellow	Flaps position potentiometer
13	Black	Ground
14	Yellow	Fuel flow P/N 100403-003
15	Red	Fuel flow power P/N 100403-003 / Oil pressure (Honeywell and Rotax P/N 456180 only) sensor power
16	Black	Ground
17	Black	Ground
18	White/Red	Manifold Pressure Sensor Power (+5 volt) / Kavlico Pressure Sensors
19	White/Black	No connection
20	Orange/Brown	Fuel level left (resistive)
21	Orange/Blue	Fuel level right (resistive)
22	Violet/Yellow	Rotax CHT or oil (801-10-1)
23	Violet/Green	Elevator position potentiometer
24	Orange/Green	Ammeter shunt + P/N 100412-000
25	Orange/Violet	Ammeter shunt - P/N 100412-000
26	Green/Red	Manifold Pressure P/N 100434-000
27	Open	No connection
28	Open	No connection
29	Yellow/Green	Optional External Alarm Indicator
30	Black	No connection
31	White/Orange	No connection
32	White/Green	RPM
33	White/Blue	No connection
34	Blue	No connection
35	Green	No connection

36	Blue or Unwired	No connection
37	Green or Unwired	No connection

Table 45 – Suggested Rotax 912 ULS Carbureted Sensor Connections for EMS D37F Harness

Pin	EMS D25M Thermocouple Harness Wire Color	Sensor (with Dynon Avionics P/N if applicable)
1	Open	N/A
2	Open	N/A
3	Open	N/A
4	Open	N/A
5	Open	N/A
6	Red	N/A
7	Red	N/A
8	Red	N/A
9	Red	N/A
10	Red	N/A
11	Red	EGT 2 (K-type thermocouple, 100405-000*)
12	Red	N/A
13	Red	EGT 1
14	Open	N/A
15	Open	N/A
16	Open	N/A
17	Open	N/A
18	White	N/A
19	Yellow	N/A
20	White	N/A
21	Yellow	N/A
22	White	N/A
23	Yellow	EGT 2
24	White	N/A
25	Yellow	EGT 1

Table 46 – Suggested Rotax 912 ULS Carbureted Sensor Connections for EMS D25M Harness

* Note that J-type and K-type thermocouples apply to all CHTs or EGTs, respectively. They are not repeated in the table for brevity's sake.

Rotax 912 iS (Electronic Control Unit)

Table 45 below is the suggested sensor connections for a Rotax 912 iS engine connected to an SV-EMS-221 EMS module. Note that the Rotax 912 iS engine does not utilize thermocouple sensors to monitor CHT and EGT temperatures on the SV-EMS-221 EMS module, thus there is no connection to the D25F connector on the SV-EMS-221.

Pin	EMS D37F Harness Wire Color	Sensor (with Dynon Avionics P/N if applicable)
1	Red	Battery voltage (voltmeter input)
2	Yellow or Unwired	No connection
3	Black	Available ground
4	Violet/Blue	No connection
5	Black	Available ground
6	White/Yellow	No connection
7	White/Brown	No connection
8	Brown	Fuel pressure P/N 103757-000 (new) Fuel pressure P/N 101692-000 (legacy)
9	Brown/Blue	No connection
10	Brown/Yellow	No connection
11	Orange	No connection
12	Yellow	Flaps position potentiometer
13	Black	Available ground
14	Yellow	Fuel flow P/N 100403-003
15	Red	Fuel flow power P/N 100403-003 / Oil pressure (Honeywell and Rotax P/N 456180 only) sensor power
16	Black	Available ground
17	Black	Available ground
18	White/Red	Manifold Pressure Sensor Power (+5 volt) / Kavlico Pressure Sensors
19	White/Black	Return fuel flow P/N 100403-003
20	Orange/Brown	Fuel level left (resistive)
21	Orange/Blue	Fuel level right (resistive)
22	Violet/Yellow	No connection
23	Violet/Green	Elevator position potentiometer
24	Orange/Green	Ammeter shunt + P/N 100412-000
25	Orange/Violet	Ammeter shunt - P/N 100412-000
26	Green/Red	No connection
27	Open	RPM Signal to Rotax 912 iS Prop Controller (optional)
28	Open	NOTE: Must be grounded to common ground with Prop Controller
29	Yellow/Green	Optional External Alarm Indicator
30	Black	No connection
31	White/Orange	No connection
32	White/Green	No connection

Pin	EMS D37F Harness Wire Color	Sensor (with Dynon Avionics P/N if applicable)
33	White/Blue	No connection
34	Blue	No connection
35	Green	No connection
36	Blue or Unwired	CAN High from 912 iS ECU
37	Green or Unwired	CAN Low from 912 iS ECU

Table 47 – Suggested Rotax 912 iS Sensor Connections for EMS D37F Harness

The Rotax 912 iS Electronic Control Unit (ECU) provides the following information to SkyView via a computerized CAN bus interface:

- Engine RPM (tachometer)
- Oil Temperature
- Oil Pressure
- Coolant Temperature
- Lane A Bus Voltage
- Lane B Bus Voltage
- EGT 1-4
- Manifold Pressure
- Fuel Flow
- Engine Time
- Throttle Position
- Cold Start Assistance (color coding on the Throttle Position widget)
- Power / ECO mode state

ROTAX: LIMIT FLIGHT OP is displayed as a CAUTION message in the SkyView display's message area concurrent with one of the two "EMS lamps" (discrete outputs) on the Rotax 912 iS ECU are flashing.

ROTAX: LAND AIRCRAFT is displayed as a CAUTION message on the SkyView display's message area concurrent with both "EMS lamps" (discrete outputs) on the Rotax 912 iS ECU are flashing simultaneously or on (any combination thereof), or any time one of the two lamps is on.

These two displayed messages are identical to Rotax's published guidance to engine operators. Note that installers can still connect ECU discrete outputs for each lamp to SkyView contact inputs to display the actual lamps on a SkyView EMS page.

In addition to the above, when the 912 iS ECU detects a fault, it generates more detailed fault codes that maintenance organizations can use to troubleshoot. SkyView displays a list of these faults under MENU > ENGINE MENU > FAULTS (HDX) or EMS > FAULTS (all others). Normally, it should say NONE. Consult your Rotax service organization for details of what to do if a fault is shown. This display should not be considered a full replacement for Rotax-provided fault-detecting tools.

Additionally, the SV-EMS-221 provides an RPM out signal that can be sent to the aircraft's propeller controller (if so equipped). The RPM out signal is nominally at 0 volts and steps to 12 volts for 0.1 milliseconds. The RPM out signal pulses once per engine revolution. The installer must verify compatibility between the RPM out signal and the RPM input requirements of the aircraft's propeller controller. The following diagram details all of the connections that need to be made between the Rotax 912 iS and the SV-EMS-221, as well as the optional RPM signal output to a propeller controller:

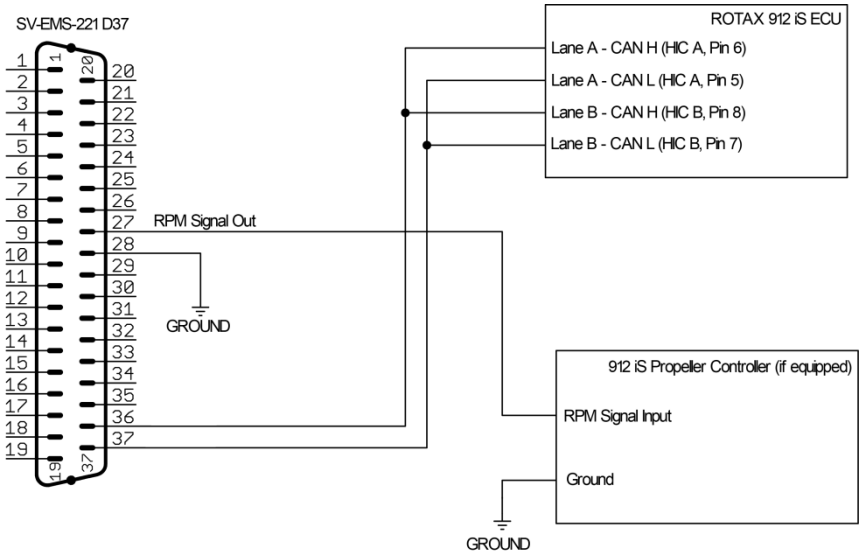

Figure 61 – SV-EMS-221 / Rotax 912 iS Connections

Other connections, including fuel pressure, amps, volts, trim/flaps, and fuel quantity sensors are made in the usual way between the individual sensors and the SV-EMS-221 directly.

Additional Rotax 912 iS Installation Instructions

When installing the SV-EMS-221 and the Rotax 912 iS and configuring the SkyView EMS system, please observe the following:

- The engine type under SETUP MENU > EMS SETUP > ENGINE INFORMATION > ENGINE TYPE must be set to ROTAX 912 iS (SV-EMS-221 ONLY) for 912 iS-specific indications to display properly.
- While the 912 iS ECU does report fuel flow information, Rotax makes no claims about its accuracy. To allow the 912 iS ECU's fuel flow parameter to be used by SkyView for both fuel flow indications and fuel computer computations, simply make sure that pins C37P14 and C37P19 under SETUP MENU > EMS SETUP > SENSOR INPUT MAPPING are set to UNUSED. If, instead, you opt to use physical fuel flow sensors, set these pins to fuel flow sensors in the usual way and the physical sensor will automatically override the Rotax 912 iS ECU's fuel flow reports.

- If you have not installed physical fuel flow sensors (Dynon Avionics P/N 100403-003; Electronics International FT-60 “Red Cube”), the fuel flow information from 912 iS ECU used by the SkyView Fuel Computer can be adjusted if necessary: SETUP MENU > HARDWARE CALIBRATION > EMS CALIBRATION > FUEL FLOW CALIBRATION > PUL/GAL (C37 P14) > (value). The default value is 68000. Higher numbers will reduce reported fuel flow; lower numbers will increase reported fuel flow. For example, if the reported fuel flow is 10% low (determined by careful records of fuel fills and fuel used), set the value of C37 P14 to 61818 (68000 – 10%). Changing this value will not alter the displayed fuel flow; it will only alter the fuel used calculated by the SkyView Fuel Computer.
- The latest EMS sensor definitions file must be downloaded from the SkyView Downloads page at http://downloads.dynonavionics.com and loaded onto each display. To verify, check SETUP MENU > SYSTEM SETUP > EMS SETUP > SENSOR DEBUG DATA. The date of the sensor definition file currently loaded on the display will be displayed on the top line of the right window.
- See the EMS Engine Setups area at http://downloads.dynonavionics.com to download a file that sets up 912 iS-specific pin mappings. It also positions 912 iS-specific widgets on the EMS pages (such as ECU Lane A/B voltage, which must be monitored per Rotax).
- As of SkyView Software v13.0, these 912 iS-specific widgets were added:
    - Throttle Position
    - Cold Start Assistance (color coding on the Throttle Position widget)
    - Power / ECO mode state
- The new Kavlico 150 PSI sensor (P/N 103757-000) and the legacy Kavlico 0-50 PSI fuel pressure sensor (P/N 101716-000) are the **ONLY** sensors that can be used to monitor fuel pressure when SkyView is used to monitor a 912 iS engine. If you use the EMS Engine Setup for the 912 iS that is available from the link above, the selection and setup is already correctly performed for you. If not, the following is required:
    - If using the new 150 PSI Kavlico sensor, the “KAV V2 150PSI DIFF103757-000/503851-000” sensor must be selected for fuel pressure sensor selection under SETUP MENU > EMS SETUP > SENSOR INPUT MAPPING.
    - If using the legacy 0-50 PSI Kavlico sensor, the “KAV 50 PSI DIFFERENTIAL (101716-000)” sensor must be selected for fuel pressure sensor selection under SETUP MENU > EMS SETUP > SENSOR INPUT MAPPING.
- Fuel pressure on the 912 iS is measured with respect to the air box pressure. To be able to display correct fuel pressure, SkyView must receive the following data:
- Manifold pressure (via CAN bus from Rotax 912 iS ECU), and
- Barometric pressure (via SkyView Network from SkyView SV-ADAHRS-200/201).

ULPower (Electronic Control Unit)

Table 45 below is the suggested sensor connections for a ULPower engine connected to an SV-EMS-221 EMS module.

Pin	EMS D37F Harness Wire Color	Sensor (with Dynon Avionics P/N if applicable)
1	Red	Battery voltage (voltmeter input)
2	Yellow or Unwired	No connection
3	Black	Available ground
4	Violet/Blue	No connection
5	Black	Available ground
6	White/Yellow	No connection
7	White/Brown	No connection
8	Brown	Fuel pressure P/N 103757-000 (new) Fuel pressure P/N 101692-000 (legacy)
9	Brown/Blue	No connection
10	Brown/Yellow	No connection
11	Orange	No connection
12	Yellow	Flaps position potentiometer
13	Black	Available ground
14	Yellow	Fuel flow P/N 100403-003
15	Red	Fuel flow power P/N 100403-003 / Oil pressure (Honeywell and Rotax P/N 456180 only) sensor power
16	Black	Available ground
17	Black	Available ground
18	White/Red	Manifold Pressure Sensor Power (+5 volt) / Kavlico Pressure Sensors
19	White/Black	Return fuel flow P/N 100403-003
20	Orange/Brown	Fuel level left (resistive)
21	Orange/Blue	Fuel level right (resistive)
22	Violet/Yellow	No connection
23	Violet/Green	Elevator position potentiometer
24	Orange/Green	Ammeter shunt + P/N 100412-000
25	Orange/Violet	Ammeter shunt - P/N 100412-000
26	Green/Red	No connection
27	Open	RPM Signal to Rotax 912 iS Prop Controller (optional)
28	Open	NOTE: Must be grounded to common ground with Prop Controller
29	Yellow/Green	Optional External Alarm Indicator
30	Black	No connection
31	White/Orange	No connection
32	White/Green	No connection
33	White/Blue	No connection
34	Blue	No connection

Pin	EMS D37F Harness Wire Color	Sensor (with Dynon Avionics P/N if applicable)
35	Green	No connection
36	Blue or Unwired	CAN High from 912 iS ECU
37	Green or Unwired	CAN Low from 912 iS ECU

Table 48 – Suggested ULPower Sensor Connections for EMS D37F Harness

Example 9-cylinder Radial

(Using Dual SV-EMS-220s,
100399-000, 100399-001, 100399-002 Harnesses)

PRIMARY EMS MODULE with 100399-000 Harness		
Pin	**EMS 37-pin Harness Wire Color**	**Sensor (with Dynon Avionics P/N if applicable)**
1	Red	Battery Voltage (Voltmeter Input)
2	Yellow or Unwired	No connection
3	Black	Ground
4	Violet/Blue	Elevator Position Potentiometer
5	Black	Ground
6	White/Yellow	Oil pressure P/N 101693-000 (legacy) Oil pressure P/N 103757-000 (new)
7	White/Brown	Oil Temperature P/N 100409-000
8	Brown	15 PSI Fuel Pressure P/N 101690-000 (legacy) or 50 PSI Fuel Pressure 101716-000 (legacy) 15 PSI Fuel pressure P/N 103755-000 (new) or 150 Fuel pressure P/N 103757-000 (new)
9	Brown/Blue	Heated AOA/Pitot Probe status (contact input)
10	Brown/Yellow	No connection
11	Orange	No connection
12	Yellow	No connection
13	Black	Ground
14	Yellow	Fuel Flow P/N 100403-003
15	Red	Fuel Flow Power P/N 100403-003
16	Black	Ground
17	Black	Ground
18	White/Red	Manifold Pressure Sensor Power (+5 Volt) and Kavlico Pressure Sensors (+5 Volt)
19	White/Black	No connection
20	Orange/Brown	Fuel Level Left (Resistive)
21	Orange/Blue	Fuel Level Right (Resistive)
22	Violet/Yellow	Flaps position Potentiometer
23	Violet/Green	No connection
24	Orange/Green	Ammeter Shunt + P/N 100412-000
25	Orange/Violet	Ammeter Shunt – P/N 100412-000
26	Green/Red	Manifold Pressure P/N 100434-000
27	Open	No connection

28	Open	No connection
29	Yellow/Green	Optional External Alarm Indicator
30	Black	No connection
31	White/Orange	No connection
32	White/Green	RPM Left (Standard)
33	White/Blue	RPM Right (Standard)
34	Blue	No connection
35	Green	No connection
36	Blue or Unwired	No connection
37	Green or Unwired	No connection

Table 49 – Example 9-cylinder Radial Primary SV-EMS-220 37-pin Connector Sensor Map

PRIMARY EMS MODULE with 100399-002 Harness		
Pin	**EMS 25-pin Thermocouple Harness Wire Color**	**Sensor (with Dynon Avionics P/N if applicable)**
1	Open	N/A
2	Red	CHT 6 (J-type thermocouple, 100404-000*)
3	Red	EGT 6 (K-type thermocouple, 100405-000*)
4	Red	CHT 5
5	Red	EGT 5
6	Red	CHT 4
7	Red	EGT 4
8	Red	CHT 3
9	Red	EGT 3
10	Red	CHT 2
11	Red	EGT 2
12	Red	CHT 1
13	Red	EGT 1
14	White	CHT 6
15	Yellow	EGT 6
16	White	CHT 5
17	Yellow	EGT 5
18	White	CHT 4
19	Yellow	EGT 4
20	White	CHT 3
21	Yellow	EGT 3
22	White	CHT 2
23	Yellow	EGT 2
24	White	CHT 1
25	Yellow	EGT 1

~~Table 49 – Example 9-cylinder Radial Primary SV-EMS-220~~ ~~25-pin Connector Sensor Map~~

~~* Note that J-type and K-type thermocouples apply to all CHTs or EGTs, respectively. They are not repeated in the table for brevity's sake.~~

Table 50 – Example 9-cylinder Radial Primary SV-EMS-220 25-pin Connector Sensor Map

* Note that J-type and K-type thermocouples apply to all CHTs or EGTs, respectively. They are not repeated in the table for brevity's sake.

SECONDARY EMS MODULE with 100399-001 Harness		
Pin	**EMS 25-pin Thermocouple Harness Wire Color**	**Sensor (with Dynon Avionics P/N if applicable)**
1	Open	N/A
2	Red	Harness does not have a wire in this pin
3	Red	Harness does not have a wire in this pin
4	Red	Harness does not have a wire in this pin
5	Red	Harness does not have a wire in this pin
6	Red	Not Connected (Harness label CHT 4)
7	Red	Not Connected (Harness label EGT 4)
8	Red	CHT 9 (Harness label CHT 3) (J-type thermocouple, 100404-000*)
9	Red	EGT 9 (Harness label EGT 3) (K-type thermocouple, 100405-000*)
10	Red	CHT 8 (Harness label CHT 2)
11	Red	EGT 8 (Harness label EGT 2)
12	Red	CHT 7 (Harness label CHT 1)
13	Red	EGT 7 (Harness label EGT 1)
14	White	Harness does not have a wire in this pin
15	Yellow	Harness does not have a wire in this pin
16	White	Harness does not have a wire in this pin
17	Yellow	Harness does not have a wire in this pin
18	White	Not Connected (Harness label CHT 4)
19	Yellow	Not Connected (Harness label EGT 4)
20	White	CHT 9 (Harness label CHT 3)
21	Yellow	EGT 9 (Harness label EGT 3)
22	White	CHT 8 (Harness label CHT 2)
23	Yellow	EGT 8 (Harness label EGT 2)
24	White	CHT 7 (Harness label CHT 1)
25	Yellow	EGT 7 (Harness label EGT 1)

Table 51 – Example 9-cylinder Radial Primary SV-EMS-220 25-pin Connector Sensor Map

* Note that J-type and K-type thermocouples apply to all CHTs or EGTs, respectively. They are not repeated in the table for brevity's sake.

~~Table 50 – Example 9-cylinder Radial Primary SV-EMS-220 25-pin Connector Sensor Map~~

~~* Note that J-type and K-type thermocouples apply to all CHTs or EGTs, respectively. They are not repeated in the table for brevity's sake.~~

In Table 50 above, the Primary SV-EMS-220 uses a 100399-002 6-cylinder CHT/EGT harness; these are connected to Cylinders 1-6.

In Table 51 above, the Secondary SV-EMS-220 uses a 100399-001 4-cylinder CHT/EGT harness; cables marked Cylinders 1-3 are connected to Cylinders 7-9, respectively.

To configure dual EMS' to support additional thermocouples (CHTs / EGTs), go to
SV-EMS-220, SETUP MENU > EMS SETUP > DUAL EMS SETUP:
> DUAL ENGINE MODE: NO
> PRIMARY EMS MODULE: (select a S/N)
On the SV-EMS-220 selected as primary, all pins on the 37-pin and 25-pin connectors are enabled. On the secondary SV-EMS-220, *only the thermocouple (CHT/EGT) inputs* on the 37-pin and the 25-pin connectors are enabled.

(Note: Support for dual SV-EMS-220/221 modules is supported only in SkyView Classic; this feature is not available in SkyView SE or SkyView HDX (as of Software v15.0).

Dual Engine Support Using Dual SV-EMS-220/221s and Two SkyView Classic Displays

Support for dual SV-EMS-220/221 modules is supported *only* in SkyView Classic; this feature is *not supported* in SkyView SE or SkyView HDX (as of Software v15.0).

SkyView Classic can monitor dual engines by displaying engine data for each engine on separate SkyView Classic displays. Engine #1 is assigned to one SV-EMS-220/221 module and one SkyView Classic display. Engine #2 is assigned to the other SV-EMS-220/221 module, and another SkyView Classic display. Thus, dual SV-EMS-220/221s, and at least two SkyView Classic displays are required. To set up dual engine monitoring, go to:
SETUP MENU > EMS SETUP > DUAL EMS SETUP:
> DUAL ENGINE MODE: YES
> ENGINE #1 EMS: (select S/N of the appropriate SV-EMS-220/221)
> ENGINE #2 EMS: (select S/N of the appropriate SV-EMS-220/221)
> SPLIT FUEL COMPUTER: YES/NO. Set to YES if you want the fuel computer(s) to display information based only on the engine assigned to the individual display(s). Set to NO if you want the fuel computer(s) to display information based on both engines. One would normally choose YES if the Engine #1 and Engine #2 fuel systems are completely isolated and NO if the Engine #1 and Engine #2 fuel system are fed by a common fuel system.

For dual Rotax 912 iS with dual SV-EMS-221s that do not have individual fuel flow sensors installed (using only CAN BUS fuel flow), set SPLIT FUEL COMPUTER to YES; setting SPLIT FUEL COMPUTER to NO will not display correct, combined fuel computer information.

On the SkyView Classic display that will display Engine #1 data, go to:
SETUP MENU > LOCAL DISPLAY SETUP > ENGINE TO DISPLAY > EMS 1 > ACCEPT (button)

On the SkyView Classic display that will display Engine #2 data, go to:
SETUP MENU > LOCAL DISPLAY SETUP > ENGINE TO DISPLAY > EMS 2 > ACCEPT (button)

In a dual engine configuration, streamed EMS data (serial TX – DYNON AVIONICS EMS) is not supported.

After setting up dual engine support above, changes made to engine configuration or EMS page layout affect only that display, and the configuration of the SV-EMS-220/221 associated with it. For example, changing a setting, or widget layout, for Engine #1, will not cause changes to settings or layout for Engine #2.

If, after setting up dual engine support per the above instructions, if DUAL ENGINE SUPPORT is later changed to NO, engine timer values (such as HOBBS) displayed on the individual EMS screens will be reset. One SkyView Classic display's timers will overwrite timers on all other displays.

Engine Sensor and Transducer Installation

This section explains the steps required to install and connect all sensors and transducers supplied by Dynon Avionics. Additionally, connection instructions are given for some sensors and transducers that Dynon Avionics does not sell, like the tachometer, fuel level, flaps, trim, and contacts.

All sensors and transducers must be properly defined, mapped, and configured as described in the EMS Sensor Definitions, Mapping, and Settings Section of this guide.

Remember to configure the measurement units for your Engine Page as described in the How to Configure Units Section.

Engine Sensor Accuracy and Grounding

It is vitally important that all engine sensors, your SkyView display, your SV-EMS-220/221 module, and electrical system all share the same ground, and that there is virtually no measurable voltage between these grounds.

Large currents flow between your alternator and the rest of your aircraft. The ground for these currents is shared with your sensors. Because of the large currents involved, resistance in grounds that cannot be seen with a simple multimeter can still lead to significant voltage offsets. This can lead to errors in sensor readings.

These large currents exist in other places in the aircraft as well, such as between the battery ground cable and its connection to the airframe, and along the grounding points for the avionics bus. It is important that all of these ground paths be appropriately sized for the loads involved, and that the connections be clean, solid, and devoid of contamination.

In particular, be sure to connect a ground wire between your engine block or avionics ground block and any of the SV-EMS-220/221's ground pins.

Please note that running a ground wire from the EMS to the engine block may not entirely solve grounding issue, as this adds just a small wire in parallel with another much larger wire, and the load will get transferred to this smaller wire, which itself is resistive due to its small size, and thus no real effect will be seen.

Though dealing with grounding issues can be time consuming and frustrating, errors that are seen on your Dynon Avionics Engine Monitor are caused by points in the aircraft where there is insufficient grounding. This can lead to weak starting, hot wires, and corrosion. Fixing the Engine Monitor readings by having a good ground will also lead to a healthier aircraft electrical system overall.

Tools and Equipment Required

The following list contains commonly used tools and equipment, however some of the tools or equipment listed below may not apply to your installation.

- Wire strippers
- 22 AWG wire
- DSUB pin crimper
- Faston/ring terminal crimp tool
    - Available – http://bandcspecialty.com – (316) 283-8000 – part number RCT-1
- Weather Pack crimp tool (common slip joint pliers will also work)
    - Available from http://www.whiteproducts.com/tools.shtml
- #2 Phillips screwdriver
- Flathead screwdriver
- ¼" ID tubes, any necessary adapters, and clamps for routing manifold pressure to the sensor.
- Drill and 1/8" bit

Voltmeter Inputs

Pins 1 and/or Pin 2 of the EMS D37 connector can be used to monitor voltage in your electrical system (or any other DC voltage source) from 10-30V DC. Connect either of the pins to a point in your electrical system that you wish to monitor.

Exhaust Gas Temperature (EGT) Sensors

Wire length of CHT/EGT harnesses supplied by Dynon Avionics is not critical. It is acceptable to cut the thermocouple (brown) wire of the CHT/EGT harness to shorten the appropriate length for your installation. It is recommended to not cut the "armored" portion of the cable near the sensor end of the CHT or EGT sensors.

The EGT wire may be extended provided that:
1) Type K thermocouple is used for the extension wire. (This is different than CHT wire.)
2) There is no temperature change across the connection between the junction that is created. For example, do not create a junction across the firewall.

If either of the above guidelines are not followed, your EGT readings will be incorrect.

Correct placement of EGT sensors on the exhaust manifold - per the engine manufacturer's guidance - is critical to obtaining accurate readings. Placement differs between engine types and even specific models. All thermocouple harnesses supplied by Dynon Avionics have each function (e.g., CHT1, EGT1) labeled on each thermocouple pair.

Consult the specific engine's manual for proper EGT locations.

Rotax 912 (except 912 iS)

For carbureted Rotax 912 engines, only two of the four cylinders are typically monitored for EGT. Unlike the CHT sensors which are mounted on diagonal cylinders, the EGT sensors should be mounted on the two rear cylinders' exhaust manifolds. It is critical that the EGT sensors be mounted to parallel cylinders' exhaust manifolds for proper temperature comparison.

Rotax 914

The 914 uses threaded EGT sensors that screw into bosses provided on the 914-specific exhaust manifold. Two sensors that should work are the Westach 712-4D6K and UMA 2B30. These sensors are not available from Dynon Avionics.

Most Other Engines

Once you have determined the appropriate EGT locations for your engine, drill 1/8" diameter holes at the specified positions in the exhaust manifold. Usually, this spot is 2 to 8 inches (50mm to 200 mm) from the cylinder. This spot should be on a straight portion of the exhaust manifold, as this provides a better fit for the hose clamps. For best results, mount all sensors the same distance from each cylinder.

- Make sure the hole is placed to ensure that the sensor does not interfere with the cowl or spark plug. Also, when making holes, keep in mind that the sensor could inhibit the ability to perform routine maintenance if placed incorrectly.
- Place sensor in exhaust manifold, and secure it by tightening the clamp with a flathead screwdriver. Make sure the clamp is tight and provides a secure fit, but do not over-tighten such that visible stress is put on the pipe.

Now, plug each thermocouple wire into its corresponding wire on the thermocouple harness. Ensure that you match the wire color pairs on the harness to those on the thermocouple. All thermocouple harnesses supplied by Dynon Avionics have each function (e.g., CHT1, EGT1) labeled on each thermocouple pair.

A loose sensor could allow exhaust to leak. This can lead to carbon monoxide poisoning in the cabin and/or a potential fire. Have a knowledgeable mechanic inspect the installation.

The sensor can come loose during flight, and could potentially come in contact with rotating engine parts or the propeller. We suggest a safety wire to keep the sensor in place.

Cylinder Head Temperature (CHT) Sensors

Wire length of CHT/EGT harnesses supplied by Dynon Avionics is not critical. It is acceptable to cut the thermocouple (brown) wire of the CHT/EGT harness to shorten the appropriate length for your installation. It is recommended to not cut the "armored" portion of the cable near the sensor end of the CHT or EGT sensors.

CHT wire may be extended as well, provided that:
1) Type J thermocouple is used for the extension wire. (This is different than EGT wire)
2) There is no temperature change across the connection between the junction that is created. For example, do not create a junction across the firewall.
If either of the above guidelines are not followed, your CHT readings will be incorrect.

Dynon Avionics sells and supports a variety of CHT sensors. All thermocouple harnesses supplied by Dynon Avionics have each function (e.g., CHT1, EGT1) labeled on each thermocouple pair.

Lycoming/Continental

Dynon Avionics sells bayonet style CHT sensors (used in Lycoming and Continental engines). With each sensor we sell, a bayonet adapter is included. Your specific engine manual should describe where to mount these bayonet adapters, but normally, there is a threaded hole (CHT well) near the bottom of the cylinder close to the lower spark plug. Screw the bayonet adapter into this hole. Screw the locking collar up or down the spring surrounding the sensor such that the tip of the sensor is pressed against the bottom of the CHT well when the collar is attached to the adapter. Insert the CHT sensor into the well and lock the collar to the adapter. Now, plug each thermocouple wire into its corresponding wire on the thermocouple harness. Ensure that you match the wire color pairs on the harness to those on the thermocouples.

Rotax 912 (except 912 iS) and Rotax 914

Rotax 912 and Rotax 914 engines use 2 resistive CHT sensors that are included with the engine. These sensors are preinstalled, but you need to route the connections from them to the SV-EMS-220. See the Rotax CHT Sensors Section for information on making the physical connection to the sensor.

Jabiru

Jabiru engines require a 12 mm ring-terminal CHT sensor for each cylinder. First, slide the compression washer off the spark plug. Slide the 12 mm ring-terminal sensor onto the plug. Now, slide the spark plug compression washer back onto the spark plug. Reinstall the spark plug

into the spark plug hole. Please refer to the documentation that came with your engine for more information. Now, plug each thermocouple wire into its corresponding wire on the thermocouple harness. Ensure that you match the wire color pairs on the harness to those on the thermocouples.

Tachometer

Tachometer pulses/revolution are set in the Engine Information Wizard – SETUP MENU > HARDWARE CALIBRATION > EMS CALIBRATION > TACHOMETER CALIBRATION.

Dynon Avionics does not sell a tachometer transducer.

Depending upon existing equipment and engine type, you have a few options for connecting the tachometer inputs on the SV-EMS-220/221. Table 52 revisits the SV-EMS-220/221 pins that are compatible with RPM sources.

Pin	Wire Color	Function
32	White/Green	Standard RPM Input Left (10+ volts)
33	White/Blue	Standard RPM Input Right (10+ volts)
34	Blue	Low Voltage RPM Input Left (< 12 volts)
35	Green	Low Voltage RPM Input Right (< 12 volts)

Table 52 – SV-EMS-220/221 RPM Inputs

See the relevant subsections below for your particular method. You may connect different types of signals to the two different RPM inputs (e.g., p-lead to Standard RPM Left and a 12 volt transducer to Standard RPM Right).

SkyView will display RPM from either the RPM Input Left *or* the RPM Input Right, whichever is noticed by the SV-EMS-220 first. If the first RPM signal is lost (such as when one ignition source fails, or during a routine mag check), then SkyView will display RPM from the remaining RPM signal. If your engine only provides one RPM signal, connect it to one of the two RPM Input Left pins.

Pin 32 and Pin 34 are both LEFT RPM input. Use one, or the other, but not both.
Pin 33 and Pin 35 are both RIGHT RPM input. Use one, or the other, but not both.

Tachometer transducer

If you have a dedicated tachometer transducer (usually with a 12 volt output), you may simply connect its output to the *Standard RPM Left* input on the SV-EMS-220/221. Ensure that you follow all recommendations given in the manual for your individual tachometer transducer.

P-lead pickoff (Lycoming and Continental)

If you do not have a dedicated tachometer pickoff, you must follow the instructions below.

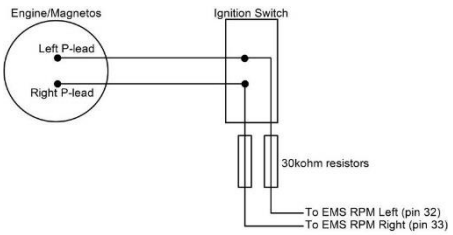

Figure 62 – Magneto Pick Off

Use the two included 30 kΩ resistors (color bands: orange, black, brown, red, brown; connect in either direction) to attach left and right P-leads to the standard RPM Left and RPM Right inputs on the SV-EMS-220/221. Connect them as shown in Figure 62. It is important to connect each resistor as close as possible to the spot where you tap into the P-lead. This minimizes the length of cable carrying high voltage spikes. Six-cylinder Lycoming engines sometimes need more inline resistance to prevent false readings by the SV-EMS-220/221. If you supply your own resistors, they need not be exactly 30 kΩ. Additionally, both 1/4W and 1/2W resistors are acceptable to use.

If, after setting the PULS/REV R and L values as described in the Engine Information Section, you see unstable RPM, you may need to increase the series resistance. We recommend increasing the resistance in increments of approximately 30 kΩ – approx. 30 kΩ, approx. 60 kΩ, approx. 90 kΩ, approx. 120 kΩ, and approx. 150 kΩ. Try each value *in sequence*. A higher resistance value is not necessarily "better", as too high a resistance can reduce the amplitude of the RPM signal to the point where you may see no, or low, RPM.

Trigger Coil (Rotax 912, except 912 iS)

The Rotax 912 engines have a 5th trigger coil for the purposes of electrically monitoring rev counts. This trigger coil outputs to a two-wire harness. Connect either of the two wires to ground; connect the other white wire to SV-EMS-220 Pin 32 (Standard RPM Left Input). If you observe erratic tachometer readings or momentary "spikes" in the display - particularly at higher RPM – install a 60K resistor inline (in series) between the trigger coil and SV-EMS-220 Pin 32, White/Green wire). Set Pulses / Revolution (PPR) to 1: SETUP MENU > HARDWARE CALIBRATION > EMS CALIBRATION > TACHOMETER CALIBRATION > PUL/REV (C37 P32/34)

Rotax 914

The Rotax 914 uses a Turbo Control Unit (TCU), which provides an RPM output > 10V.
Connect Pin 13 of the TCU to SV-EMS-220 Pin 32 (High Voltage RPM Left Input).
Connect Pin 26 of the TCU to any of Pins 3, 5, 13, 16, 17, or 30 (Ground).
Do not install a resistor in the wires between the TCU and the SV-EMS-220.
Set Pulses / Revolution (PPR) to SETUP MENU > HARDWARE CALIBRATION > EMS CALIBRATION > TACHOMETER CALIBRATION > PUL/REV (C37 P32/34)

Alternator Wire (Jabiru)

The most common tachometer pickoff location for Jabiru 2200 and 3300 engines is one of the alternator wires. Connect one of the two white alternator wires through a 1 amp (1A) fuse to SV-EMS-220 Pin 32 (Standard RPM Left Input). Set Pulses / Revolution (PPR):

Jabiru 22000A – 5
Jabiru 3300 w/3-phase alternator – 4
Jabiru 3300 w/single-phase – 6

SETUP MENU > HARDWARE CALIBRATION > EMS CALIBRATION > TACHOMETER CALIBRATION > PUL/REV (C37 P32/34)

Other Ignition Systems

The SV-EMS-220/221's Standard Voltage RPM inputs can read frequency-based RPM signals, provided the peak voltages goes at least 5.1 volts above ground, and crosses back down below 2.0V relative to ground. If the peak voltage exceeds 50 volts, use the included 30 kΩ resistors as described in the P-lead pickoff (Lycoming and Continental) Section above.

For signals that have a peak voltage of 12V or lower —such as Light Speed ignition outputs— use the low voltage RPM inputs. These inputs require that the peak voltage goes at least 2.1 volts above ground, and crosses back down below 0.8V relative to ground to be counted as a pulse.

For signals that have a peak voltage of 10-12V, either the Standard or Low Voltage RPM inputs can be used.

Like the other methods above, you must know the number of pulses per revolution for your RPM transducer.

Manifold Pressure Sensor

The Dynon Avionics Manifold Pressure Sensor (P/N 100434-000) is an integral assembly consisting of three pins, a rubber seal, and a connector housing. Strip 3/16" insulation off the ends of the three wires listed at right. Slide the three rubber seals onto the three wires and the pins onto the ends of the wires. Crimp the 3 included pins onto the ends of the wires, ensuring that the long tabs that cradle the rubber seal wrap around the seal (see picture at right for example). For more details on preparing and crimping the Weather Pack pins, see http://www.whiteproducts.net/faqs.shtml.

SV-EMS-220 Pin	Weather Pack Pin	Color	Function
18	C	White/red	+5 Volts Auxiliary It is acceptable to share this pin / wire with other sensors; see Table 32 above.
26	B	Green/red	Manifold pressure
17	A	Black	Ground

Table 53 – Manifold Pressure Sensor Pins

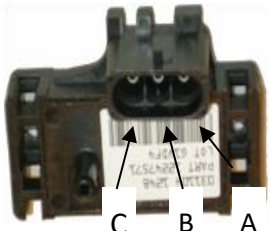

Figure 63 – Connection diagram for sensor with all black wires only

Figure 64 – Detail view of properly crimped pin.

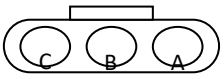

Figure 65 – Pin insertion (rear) view of supplied connector.

Note that you may need access to the SV-EMS-220/221's +5 Volts auxiliary supply for other sensor installations, so make allowances for breaking out the connection to other areas. Route the three wires to the location where you would like to mount the manifold pressure sensor.

Plug the crimped pins into the included Weatherpack connector. Now, mount the manifold pressure sensor in a secure fashion using the mounting holes on either side of the sensor.

The pressure port on the manifold pressure sensor requires 1/4" inner diameter tubing for a secure fit. You may need to use adapters to convert down to smaller inner diameter tubing for your specific engine. We recommend that you use pipe clamps at every transition point, including at the sensor itself.

Oil Pressure Sensors

The SV-EMS-220/221 supports several oil pressure sensors. The most common oil pressure sensors are Kavlico (supplied by Dynon Avionics), Rotax (preinstalled), and Jabiru (preinstalled).

Kavlico Oil Pressure Sensors

Mount the oil pressure sensor securely using an Adel clamp or other method such as a sensor mounting block on the firewall.

Before installing Kavlico sensors, reference Dynon Avionics Technical Advisory website (https://www.dynonavionics.com/support-bulletins.php) for important information regarding Kavlico sensors sold by Dynon.

The pressure sensor has a 1/8-27 NPT pipe thread fitting. Use appropriate adapters and materials to remotely mount the sensor. Do not mount the sensor directly to the engine's pressure port.

DO NOT mount sensor directly to engine or other areas of high vibration. Always mount sensor remotely to minimize vibration effects.

DO NOT thread sensor into pressure port by plastic portion of sensor. Doing so will damage the sensor. Use a wrench on the metal hex portion of sensor to tighten.

The pressure port must have a pressure fitting with a restrictor hole in it. Restrictor holes minimize leakage in the event of a failure of any of the items downstream of the pressure port connection, allowing time for an emergency landing.

As of 2020, Dynon Avionics no longer supplies the original 150 PSI Kavlico sensor (P/N 101693-000). For new installations, use the new 150 PSI Kavlico sensor (P/N 103757-000). The new sensor is a direct mechanical and electrical replacement for the original sensor. Updated software sensor definitions are available from Dynon Avionics' software download page.

Figure 66 – Original 1/8-27 NPT 0-150 PSI Sensor (P/N°101693-000)

Figure 67 – New 1/8-27 NPT 6-150 PSI Sensor (P/N°103757-000) (Shown Without Wiring Connector)

Retrofit Legacy Oil Pressure Sensor with Kavlico Oil Pressure Sensor

Prior to 2012, Dynon Avionics utilized non-Kavlico sensors that are no longer supplied. If you are retrofitting a Kavlico Oil Pressure Sensor into an engine which used the legacy oil pressure sensor supplied by Dynon Avionics (see below), the Power (Red wire) and Ground (Black wire) can be “tapped” from the Manifold Pressure (MAP) sensor that is likely already installed on the engine. The Sensor output (Green wire) is changed from the legacy sensor to the Kavlico sensor.

Kavlico Oil Pressure Sensor Wire Color	EMS Harness Wire Color	SV-EMS-220/221 Pin Number	Function
Red	White / Red It is acceptable to share this pin / wire with other sensors; see Table 32 above.	18 It is acceptable to share this pin / wire with other sensors; see Table 32 above.	Power (5V)

Black	Black It is acceptable to share this Ground with other sensors.	Any of Pin 3, 13, 16, 17, or 30 It is acceptable to share this Ground with other sensors.	Ground
Green	Varies	Pin 6 (recommended) Any of Pin 4, 6, 7, 8, 9, 10, 11, 12, 20, 21, 22, 23, or 31	Sensor output

Table 54 – Kavlico Liquid Pressure Sensor Wiring

Legacy Dynon Avionics Oil Pressure Sensor (P/N 100411-002)

As of 2012, Dynon Avionics no longer supplies this sensor. For new installations, use the Kavlico oil pressure sensor (above). To retrofit an installation of this sensor with a Kavlico oil pressure sensor, see Retrofit Legacy Oil Pressure Sensor with Kavlico Oil Pressure Sensor*, above.*

For plug-compatible replacement of this sensor in existing installations, purchase from Aircraft Spruce – 0-150 PSI, P/N 11-08066.

Mount the oil pressure sensor to a fixed location using an Adel clamp (see Figure 69) or other secure method. The oil pressure sensor must *not* be installed directly to the engine due to potential vibration problems. Dynon Avionics' sensor is supplied with a 1/8" NPT pipe thread fitting. An adapter might be necessary for some engines. Please see the manual supplied by the engine's manufacturer. You must use appropriate pipe fitting adapters and *ensure that the case of the sensor has a connection to ground.* This is critical for functionality.

1/8-27 NPT 0-150 PSI

Figure 68 – Legacy Dynon Avionics Oil Pressure Sensor

Crimp a standard #8 ring terminal onto general purpose input wire chosen for oil pressure. Unscrew the stud cap from the threaded stud. Place the ring terminal on the stud and secure the cap down sandwiching the ring terminal.

Due to vibration issues, never connect the sensor directly to the engine.

If you use Teflon tape or other seal, ensure the sensor casing still maintains a good connection to ground.

Use an Adel clamp similar to the above to secure the pressure sensor

Figure 69 – Adel Clamps

Rotax 912, Rotax 914, and Jabiru Oil Pressure

If you are installing on a Rotax or Jabiru engine, your engine comes with a pre-installed oil pressure sensor.

Prior to mid-2008, Rotax provided an oil pressure sensor with 2 tabs for electrical connection. If you are using this sensor, connect one of the tabs to a general purpose input pin and connect the other tab to ground (an SV-EMS-220/221 ground is appropriate.

In mid-2008, Rotax switched to a new type of oil pressure sensor made by Honeywell (Rotax P/N 956413) with an integrated cable. Connect the red wire of the newer sensor to SV-EMS-220/221 D37 pin 15 (+12 Volts Auxiliary), and the white wire to SV-EMS-220/221 D37 pin 6 – See Table 55 below. Select the correct sensor type as described in EMS Sensor Definitions, Mapping, and Settings.

Rotax Sensor Connector Pin	Rotax Connector Wire Color	SV-EMS-220/221 Wire Color	SV-EMS-220/221 Pin Number
N/A	White	White / Yellow	6
N/A	Red	Red It is acceptable to share this pin / wire with other sensors; see Table 32 above.	15 It is acceptable to share this pin / wire with other sensors; see Table 32 above.
N/A	Black (if present)	Do Not Connect	N/A

Table 55 – (pre-2008) Rotax Oil Pressure Sensor

In late 2012, Rotax further switched to a new oil pressure sensor (Rotax P/N 456180). It is functionally identical to the previous Honeywell (Rotax P/N 956413) sensor, and connects in the same fashion as it. However, the connector and wiring for the sensor that Rotax includes with the engine may require some assembly. See the diagram below for the pinout of the connector. Connect the wire connected to sensor pin B of the sensor to SV-EMS-220/221 D37 pin 15 (+12 Volts Auxiliary), the wire connected to sensor pin C to SV-EMS-220/221 D37 pin 6. Sensor pin A need not be connected at all. Select the correct sensor type as described in the EMS Sensor Definitions, Mapping, and Settings Section.

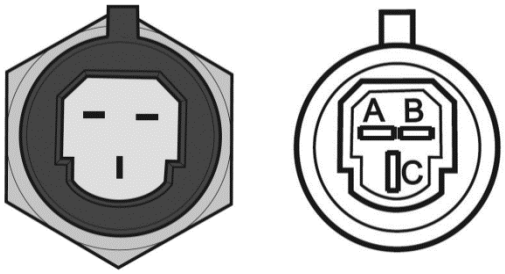

Figure 70 – Rotax Oil Pressure P/N 456180 pinout
Both views are the *sensor* connector (not the cable connector).

Rotax Sensor Connector Pin	Rotax Connector Wire Color	SV-EMS-220/221 Wire Color	SV-EMS-220/221 Pin Number
A	N/A Do Not Connect	N/A Do Not Connect	N/A Do Not Connect

B	(Customer provided, suggested color is Red)	Red It is acceptable to share this pin / wire with other sensors; see Table 32 above.	15 It is acceptable to share this pin / wire with other sensors; see Table 32 above.
C	(Customer provided, suggested color is White)	White / Yellow	6

Table 56 – (2012 and later) Rotax Oil Pressure Sensor

Note: If you are converting a Dynon Avionics D10/D100 product installation to a SkyView installation, you should remove any resistor that is connected to the existing oil pressure sensor. It is not needed when used with SkyView.

Rotax oil pressure sensors, including P/N 456180 and P/N 956413, are compatible only with SV-EMS-220/221 D37 pin 6 (White/Yellow wire). They will not function if connected to any other pin/wire.

Oil Temperature Sensors

While a Dynon Avionics oil temperature sensor may be connected to any general purpose input pin on the SV-EMS-220/221's D37, we recommend that it be connected to pin 7 on this connector.

The oil temperature sensor needs to be installed according to the directions of the engine manufacturer. Dynon Avionics sells oil temperature sensors with both 5/8-18 UNF (Dynon Avionics P/N 100409-001) and 1/8-27 NPT (Dynon Avionics P/N 100409-000) threads. Ensure that you have the right sensor for your engine.

Dynon Avionics P/N 100409-001 5/8-18 UNF Oil Temperature Sensor is furnished with an AN900-10 Crush Washer (Dynon Avionics P/N 102189-000).

1/8-27 NPT
P/N 100409-000

5/8-18 UNF
P/N 100409-001

Figure 71 – Dynon Avionics Oil Temperature Sensors

When tightening the 100409-001 5/8-18 UNF Oil Temperature Sensor into place, the Crush Washer must be centered. Failure to do so may result in an improper seal.

Another option for sealing the sensor to the engine case is Earl's Stat-O-Seal Sealing Washer # 178010 installed between the sensor and the engine case.

Tighten the sensor according to your engine manufacturer's recommendations.

Route the wire from a general purpose input pin on the EMS 37-pin Main Sensor Harness to where the oil temperature sensor is mounted. When routing the wires, make sure that they are secured, so they will not shift position due to vibration. Strip ¼" of insulation off the end of the wire. Crimp a #10 ring terminal onto the end of the wire, ensuring that a good connection is

made between the wire and the connector. Unscrew the nut from the stud on the oil temperature sensor. Slip the ring terminal onto the stud and secure the nut over it.

Some oil temperature sensors that SkyView supports (but are not sold by Dynon Avionics), such as the GRT FT-LC-01, have two wires. To connect this style of sensor, connect one wire to a Ground pin on the SV-EMS-220/221 – any of Pins 3, 13, 16, 17, or 30. It is acceptable to use an SV-EMS-220 Ground pin / wire to provide a ground connection to more than one sensor. Connect the other wire to the chosen general purpose input.

Rotax 914

Rotax supplies the oil temp sensor – P/N 801-10-1.

Fuel Pressure Sensors

Mount the fuel pressure sensor securely using an Adel clamp or other method such as a sensor mounting block on the firewall.

Before installing Kavlico sensors, reference Dynon Avionics Technical Advisory website (https://www.dynonavionics.com/support-bulletins.php) for important information regarding Kavlico sensors sold by Dynon.

The pressure sensor has a 1/8-27 NPT pipe thread fitting. Use appropriate adapters and materials to remotely mount the sensor. Do not mount the sensor directly to the engine's pressure port.

DO NOT mount sensor directly to engine or other areas of high vibration. Always mount sensor remotely to minimize vibration effects.

DO NOT thread sensor into pressure port by plastic portion of sensor. Doing so will damage the sensor. Use a wrench on the metal hex portion of sensor to tighten.

The pressure port must have a pressure fitting with a restrictor hole in it. Restrictor holes minimize leakage in the event of a failure of any of the items downstream of the pressure port connection, allowing time for an emergency landing.

As of 2020, Dynon no longer supplies the original 15, 50, 75, or 150 PSI Kavlico sensors (P/Ns 101690-000, 101716-000, 101692-000, 101693-000). For new installations, select the appropriate sensor for the airplane's fuel system:

- *Use the new 15 PSI Kavlico sensor (P/N 103755-000) for most carbureted fuel systems with 0.6–15 PSI requirements.*
- *Use the new 150 PSI Kavlico sensor (P/N 103757-000) for most injected fuel systems with 6–150 PSI requirements.*

If both the 50 PSI and 150 PSI sensors meet the airplane's fuel system requirements, then use the higher pressure 150 PSI sensor.

If neither of the above are suitable for the airplane's fuel system:

- *Use the new 50 PSI Kavlico sensor (P/N 103713-000) for fuel systems with 2–50 PSI requirements.*

The new sensors are a direct mechanical and electrical replacement for the original sensors. Updated software sensor definitions are available from Dynon Avionics' software download page.

Figure 72 – Original 1/8-27 NPT 0-15 PSI Sensor (P/N°101690-000)

Figure 73 – New 1/8-27 NPT 0.6-15 PSI Sensor (P/N°103755-000) (Shown Without Wiring Connector)

Retrofit Legacy Fuel Pressure Sensor with Kavlico Fuel Pressure Sensor

Prior to 2012, Dynon Avionics utilized non-Kavlico sensors that are no longer supplied. If you are retrofitting a Kavlico Fuel Pressure Sensor into a system which used the legacy fuel pressure sensors supplied by Dynon Avionics (see below), the Power (Red wire) and Ground (Black wire) can be "tapped" from the Manifold Pressure (MAP) sensor that is likely already installed on the engine. The Sensor output (Green wire) is changed from the legacy sensor to the Kavlico sensor.

Kavlico Fuel Pressure Sensor Wire Color	EMS Harness Wire Color	SV-EMS-220/221 Pin Number	Function
Red	White / Red It is acceptable to share this pin / wire with other sensors; see Table 32 above.	18 It is acceptable to share this pin / wire with other sensors; see Table 32 above.	Power (5V)
Black	Black It is acceptable to share this Ground with other sensors.	Any of Pin 3, 13, 16, 17, or 30 It is acceptable to share this Ground with other sensors.	Ground
Green	Varies	Pin 8 (recommended) Any of Pin 4, 6, 7, 8, 9, 10, 11, 12, 20, 21, 22, 23, or 31	Sensor output

Table 57 – Kavlico Liquid Pressure Sensor Wiring

Legacy Dynon Avionics Fuel Pressure Sensors (P/N 100411-000 and 100411-001)

As of 2012, Dynon Avionics no longer supplies this sensor. For new installations, use the Kavlico fuel pressure sensors (above). If you have a carbureted engine (legacy 30 PSI fuel pressure sensor), select from the Kavlico 0-5 PSI fuel pressure sensor (P/N 101715-000) or the Kavlico 0-15 PSI fuel pressure sensor (P/N 101690-

Figure 74 – Legacy Dynon Avionics Fuel Pressure Sensors

000). To retrofit an installation of these sensors with a Kavlico fuel pressure sensor, see section above.

For plug-compatible replacement of these sensors in existing installations, purchase from Aircraft Spruce – 0-30 PSI P/N 10-05471, or 0-80 PSI P/N 10-01568.

Mount the fuel pressure sensor to a fixed location using an Adel clamp or other secure method such as using a transducer mounting block on the firewall. The fuel pressure sensor must *not* be installed directly to the engine due to potential vibration problems. Next, connect the fuel sensor to the engine using appropriate hoses and fittings. Its pressure port has a 1/8-27 NPT pipe thread fitting; you may need adapters to connect to the pressure port on your engine. Locate the correct fuel pressure port for your engine. This port must have a pressure fitting with a restrictor hole in it. This restrictor hole ensures that, in the event of a sensor failure, fuel leakage rate is minimized, allowing time for an emergency landing.

Carbureted engines – Use the 0-30 PSI sensor (Dynon Avionics P/N 100411-000). Crimp a standard ¼" female Faston onto one of the ground wires coming from the EMS 37-pin Main Sensor Harness or another ground source such as a local engine ground. Crimp another ¼" female Faston onto a general purpose input pin wire. Push the two Fastons onto the two terminals on the fuel pressure sensor. Polarity is not important. If you are converting from a GRT EIS system, you must disconnect the external resistor pull-up from the fuel pressure output. This will make the sensor output equivalent to the sensor supplied by Dynon Avionics.

Injected engines – Use the 0-80 PSI sensor (Dynon Avionics P/N 100411-001). Crimp a standard #8 ring terminal onto the SV-EMS-220/221 general purpose input wire of your choice. Unscrew the stud cap from the threaded stud. Place the ring terminal on the stud and secure the cap down sandwiching the ring terminal. If the connection between the sensor and your engine is non-metallic, you must connect the sensor case to ground through other means. The best way to accomplish this is by sandwiching a ground-connected ring terminal between the sensor and the mating fitting.

Due to vibration issues, never connect the sensor directly to the engine.

For Dynon Avionics P/N 100411-000 and P/N 100411-001 pressure sensors, if Teflon tape or other sealant is used, ensure the sensor casing still maintains a good connection to ground.

Rotax 914 Differential Fuel Pressure Sensor

The fuel pressure sensors that Dynon Avionics sells are not suitable for use with the Rotax 914 engine, as Rotax specifies that fuel pressure on the 914 engine be measured with respect to the air box pressure. All fuel pressure sensors sold by

Dynon Avionics are only capable of measuring fuel pressure against ambient air pressure.

The UMA N1EU07D sensor is a differential pressure sensor which measures fuel pressure with respect to air box pressure as required by the 914 engine. One UMA N1EU07D sensor is installed on 914 engines, but that sensor is dedicated to the 914 turbo control unit, and the output of the sensor cannot be shared between that unit and SkyView. To display a 914 engine's fuel pressure on SkyView, a dedicated UMA N1EU07D sensor must be purchased and installed. This sensor is not supplied by Dynon Avionics.

Install the differential fuel pressure sensor in an area convenient to the connections on the engine. The mounting threads are 5/8-18. Connect side of sensor marked with a "W" to the fuel line close to the carburetors. Use 1/8-27 pipe thread fitting. Connect the other side of sensor to the air box. This can be done by inserting a "T" in the carb vent lines that go to the air box. Use a 1/8-27 pipe thread, barbed insert into the sensor. Make sure all fittings on the air box lines are tight using spring clamps or tie wraps.

UMA N1EU07D Sensor Wire Color	Function	SV-EMS-220/221 Wire Color	SV-EMS-220/221 Pin Number
Red	Power (12V)	Red It is acceptable to share this pin / wire with other sensors; see Table 32 above.	15 It is acceptable to share this pin / wire with other sensors; see Table 32 above.
Black	Ground	Black	Any of Pin 3, 13, 16, 17, or 30. It is acceptable to share this Ground with other sensors.
White	Sensor output	Any of Pin 8 (Brown), or Pin 22 (Violet/Yellow), or Pin 23 (Violet/Green), or Pin 31 (White/Orange)	

Table 58 – UMA N1EU07D Wiring

Configure the pin you chose: (SETUP MENU > EMS SETUP > SENSOR INPUT MAPPING > C37 P8 / P22 / P23 / P31: Rotax 914 Diff Fuel Press

Fuel Flow Transducer

The approximate pulses/gallon setting for the FloScan 201B (i.e., cast metal case legacy Dynon Avionics fuel flow transducer) is 28,000 to 31,000 (see the tag on the unit). The approximate pulses/gallon for the Electronics International FT-60 Fuel Flow Transducer (i.e., the red cube) is 68,000. You must configure the fuel flow transducer using this numerical value in the Sensor Setup Menu (SETUP MENU > HARDWARE CALIBRATION > EMS CALIBRATION > FUEL FLOW CALIBRATION). More

information on this topic is discussed in the Fuel Computer Configuration section of this section.

FloScan 201B sensor only: make note of the numbers on the tag (pulses / gallon) attached to the fuel flow sensor.

FT-60 (P/N 100403-003 Fuel Flow Transducer Wire Color	EMS Harness Wire Color	EMS Harness Pin Number	Function
Black	Black	Any of Pins 3, 13, 16, 17, or 30	Ground; this Ground can be shared with other sensors
Yellow or White	Yellow	14	Fuel Flow Input 1 (From fuel tank)
Red	Red It is acceptable to share this pin / wire with other sensors; see Table 32 above.	15 It is acceptable to share this pin / wire with other sensors; see Table 32 above.	+12 Volt Auxiliary
Yellow or White	White / Black	19	Fuel Flow Input 2 for optional 2nd transducer (Return to fuel tank)

Table 59 - Fuel Flow Transducer Connections

Dynon Avionics supplies the Electronics International FT-60 (Dynon Avionics P/N 100403-003) fuel flow transducer. Although Dynon Avionics no longer supplies the FloScan 201B fuel flow transducer, it remains supported as a sensor in SkyView.

The SV-EMS-220/221 supports differential fuel flow transducer installations in Rotax 912 and 914 installations as illustrated in Figure 75.

General Placement Recommendations for Fuel Flow Transducer

- Do not install the fuel flow transducer, hoses and fittings near exhaust system or turbocharger. Excessive heat can damage fuel system components.
- Do not install 90 degree fittings (elbows) on the input or output of the fuel flow transducer. Doing so will cause turbulence in the fuel flow which causes inaccurate fuel flow data.
- Install the fuel flow transducer with the three wires pointed UP.
- Install a fuel filter UPSTREAM of the fuel flow transducer to screen out debris.

- For best measuring performance, the fuel should travel uphill by one to two inches (25-50 mm) after leaving the fuel flow transducer.
- Placement of the fuel flow transducer relative to other items in the fuel system like fuel pumps is left to the builder. It is common to place the sensor downstream of any auxiliary electric boost pumps but upstream of the engine driven fuel pump.

Due to vibration issues, never connect the fuel flow transducer directly to the engine.

When sealing the fittings on the fuel flow transducer, *do not use Teflon tape!* Instead, use a sealant such as "United EZ-Turn Fuel Resistant Lubricant" or "Permatex Thread Sealant".

EI FT-60 "Red Cube" Installation

The Electronics International FT-60 "Red Cube" fuel flow transducer has ¼" female NPT ports. Do not exceed a torque of 300 inch-lbs. (.112 Nm) when installing fittings into the transducer. The FT-60 should NOT be installed with its wires pointing DOWN (the best situation is with the wires pointing UP). The fuel line on the outlet port should not drop down after exiting the transducer - this configuration can trap bubbles in the transducer, causing jumpy readings. The inlet port, outlet port, and flow direction are marked on the top of the FT-60.

Rotax Placement Recommendations

If installing on a Rotax 912, review Figure 75 for recommendations specific to these engines.

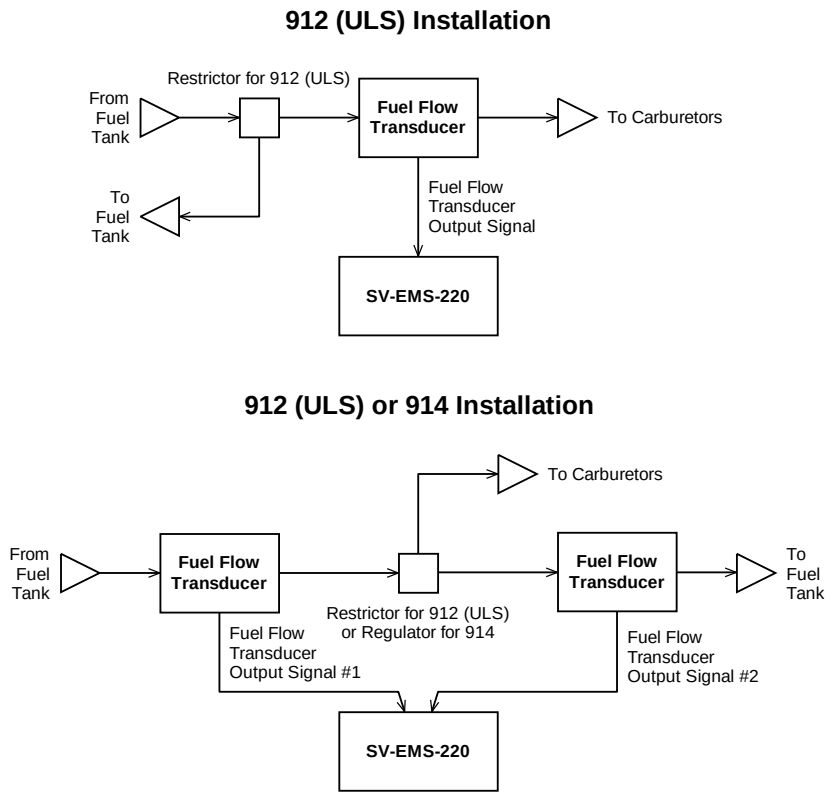

Figure 75 – Rotax Fuel Flow Transducers (Single-ended Measurement on Top and Differential Measurement on Bottom)

In the differential fuel flow configuration in the lower portion of Figure 75, the first fuel flow transducer measures the fuel flow from the fuel tank. The second fuel flow transducer measures the unused fuel flow that returns to the fuel tank. The SV-EMS-220/221 takes data from both transducers and calculates net instantaneous burn rate.

Fuel Level Sensor

Dynon Avionics does not sell fuel level sensors.

Resistive Fuel Level Sensors

You may connect as many resistive fuel level sensors to the SV-EMS-220/221 to General Purpose (GP) input – any of Pins 4, 7, 9, 10, 11, 12, 20, 21 (that are not already in use). We recommend not using Pins 6, 8, 22, and 23, and 31 for fuel level sensors as these pins are used for some specialized functions. *We recommend that Pins 20 and 21 of the SV-EMS-220/221 D37 be used for fuel level sensors before using other general purpose inputs.*

If you use a General Purpose Input other than Pins 20 and 21, you must configure the pin you use:
SETUP MENU > EMS SETUP > SENSOR INPUT MAPPING > C37 Pxx.

In SkyView Software v13.0, with SkyView Sensor Definition File Revision 46371 dated 2015-07-16, you can choose the following options under SENSOR:

- FUEL LEVEL (RESISTIVE) – averages changes in fuel level over 1.5 minutes, with most of the change occurring within the first minute). This is a change from previous versions of this setting, and is the default setting.
- FUEL LEVEL (RESISTIVE FASTER RESPONSE) – averages changes in fuel level over 15 seconds, with most of the change occurring within the first 7 seconds.
- FUEL LEVEL (RESISTIVE SLOWER RESPONSE) – averages changes in fuel level over 7 minutes, with approximately 2/3 of the change occurring within the first 3 minutes.

Choose the option which provides your preferred responsiveness to actual fuel level changes. For example, FUEL LEVEL (RESISTIVE SLOWER RESPONSE) might be preferred for an acrobatic aircraft where the (measured) fuel level changes rapidly in maneuvers that would otherwise trigger a low fuel level alert.

Capacitive Fuel Level Sensors

Capacitive fuel level sensors such as those made by Princeton Electronics are only supported on pins 8, 22, 23, and 31 on the SV-EMS-220/221 D37. Capacitive sensors must output a variable voltage within the ranges of 0-5 volts DC.

First, connect the sensor with power according to the manufacturer's instructions. If the capacitive fuel level sensor requires its own calibration, perform that calibration *before* performing the SkyView fuel level calibration.

Configure the pin you use:
SETUP MENU > EMS SETUP > SENSOR INPUT MAPPING > C37 Pxx (8, 22, 23, or 31).

Beginning in SkyView Software v13.0, with SkyView Sensor Definition File Revision 46371 dated 2015-07-16 (and later) you can choose the following options under SENSOR:

- FUEL LEVEL (CAPACITIVE) – averages changes in fuel level over a few minutes. This is a change from previous versions of this setting.
- FUEL LEVEL (CAPACITIVE SLOWER RESPONSE) – averages changes in fuel level over approximately 3x the time of FUEL LEVEL (CAPACITIVE).

Choose the option which provides your preferred responsiveness to actual fuel level changes. For example, FUEL LEVEL (CAPACITIVE SLOWER RESPONSE) might be preferred for an acrobatic aircraft where the (measured) fuel level changes rapidly in maneuvers that would otherwise trigger a low fuel level alert.

If your electrical system / startup procedure applies power to SkyView before applying power to the capacitive fuel level sensors, when first powered up, SkyView will "sense" a fuel level of 0. If the FUEL LEVEL (CAPACITIVE SLOWER RESPONSE) is selected, the fuel level will not display the actual fuel level for as long as 7 minutes after applying power. You can either change your startup procedure to apply power to the capacitive fuel level sensors before applying power to SkyView, or select FUEL LEVEL (CAPACITIVE).

If you have a Van's Aircraft RV and have installed the capacitive plates fuel level sensor option, and are installing the Dynon Avionics Capacitance to Voltage Converter for Van's Capacitive Plates (P/N 100654-000), instructions for installing this option can be found at Capacitance to Voltage Converter for Van's Capacitive Plates in Accessory Installation and Configuration.

Note that default fuel level sensor type is resistive fuel level sensors. To use capacitive fuel level sensors instead of resistive fuel level sensors requires changes to EMS settings in a few places. First, change the pins used for fuel quantity via the SETUP MENU > EMS SETUP > SENSOR INPUT MAPPING… menu. Then, in SETUP MENU > EMS SETUP > SCREEN LAYOUT EDITOR, delete the default fuel quantity widgets from the 20%, 50%, and 100% layouts. Finally, add the new fuel level widget(s) that will be available for the capacitive fuel level sensors.

After installation, prior to use, fuel level sensors must be calibrated before they can display accurate fuel levels. Until you have performed a fuel level calibration, the fuel level sensor widget will not display fuel levels, and will display **CAL ?**

If you have installed capacitive fuel level sensors, and these sensors require their own calibration, perform that calibration *before* performing the SkyView fuel level calibration.

To perform a fuel level calibration, go to SETUP MENU > HARDWARE CALIBRATION > EMS CALIBRATION > FUEL TANK xxx CALIBRATION > (one more right click) and follow the on-screen instructions to perform the fuel level calibration. Generally, you will be prompted to perform up to ten (10) fuel level pours of equal volume; the volume of each pour will be determined by the size of the tank that you input.

For an accurate fuel level calibration, it is important to follow the on-screen instructions exactly. For example, pushing the NEXT button before a fuel pour is completed, or pushing it twice for one fuel pour, will result in an inaccurate calibration, and the fuel level calibration procedure will likely have to be repeated.

Once a capacitive fuel level sensing system is calibrated for a certain type fuel, *only that fuel should be used* and the aircraft should be placarded for such. For example, ethanol has a dielectric constant much different than 100LL or Auto Fuel. If your capacitive fuel level sensor has been calibrated for 100LL, and you then use Auto 10% Ethanol in the tanks, the fuel level indications could be off significantly.

Ammeter Shunt

The ammeter shunt should be mounted so that the metal part of the shunt cannot touch any part of the aircraft. The ammeter shunt can be installed in your electrical system in one of three locations as shown in Figure 77.

Pin	Color	Function
24	Orange/green	AMPS High
25	Orange/Violet	AMPS Low

Table 61 – AMPS SHUNT Pins

Figure 76 – Amps Shunt

- If you have a VP-X system *(SkyView Classic only)* in your avionics system, use either position A or position B. Position C is not useful in a VP-X installation because the VP-X measures aircraft loads directly. Position A – Ammeter indicates current flow into or out of your battery. In this position, it will show both positive and negative currents (i.e., -60 amps to +60 amps).
- Position B–Ammeter indicates only the positive currents flowing from the alternator to both the battery and aircraft loads. (0A-60A)
- Position C–Ammeter indicates the current flowing only into the aircraft loads. (0A-60A)

Note that the ammeter shunt is not designed for the high current required by the starter and must not be installed in the electrical path between the battery and starter.

The Ammeter Shunt packaging may be marked 40mV/40A. However, Dynon Avionics rates the shunt for up to 60A loads.

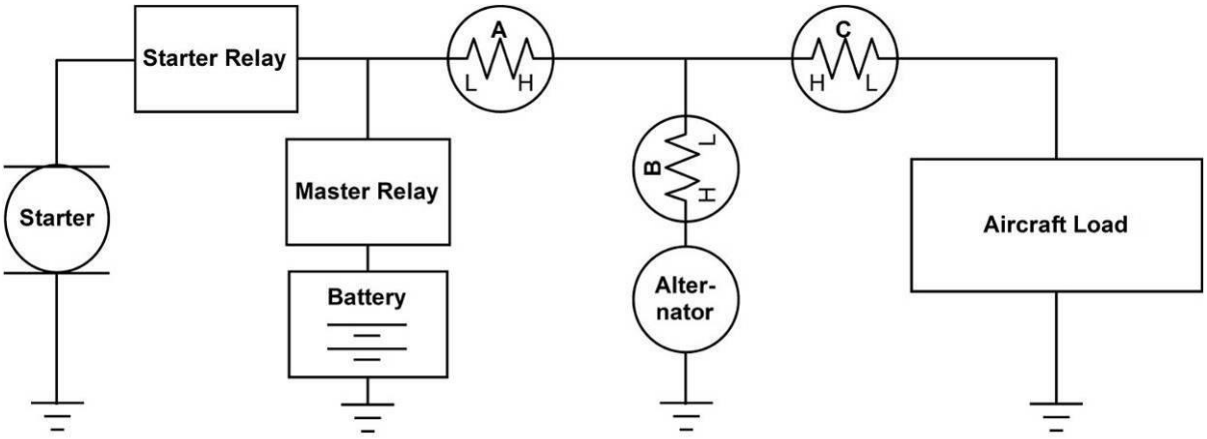

Figure 77 – Recommended Amps Shunt Locations (simplified electrical diagram)

Use two ¼" ring terminals sized appropriately for the high-current wire gauge you will be routing to and from the ammeter shunt. Cut the wire where you would like to install the ammeter shunt. Strip the wire and crimp on the ring terminals. Using a Phillips screwdriver, remove the two large screws (one on either end of the shunt), slip the ring terminals on, and screw them back into the base.

We highly recommend that you fuse both the connections between the shunt and the SV-EMS-220/221 as shown in Figure 78 below. There are two methods for accomplishing this. You may simply connect two 1 amp fuses in-line between the shunt and the SV-EMS-220. Or, you may use butt splices to connect 1" to 2" (25mm to 50mm) sections of 26 AWG wire between the shunt and each of the Amps leads connecting to the SV-EMS-220. These fusible links are a simple and cost-effective way to protect against short-circuits (fusible links in LSA installations may not be ASTM-compliant).

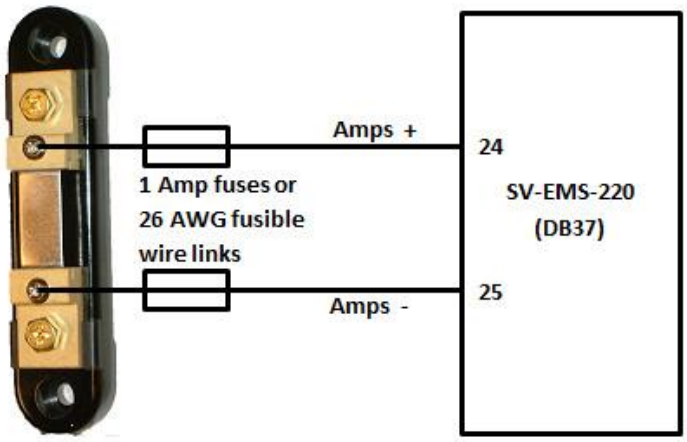

Figure 78 – Amps Shunt Fuse / Wire Connection Diagram

Next, crimp the two supplied #8 ring terminals onto the wires using the fusing method chosen above. Connect the other ends of the fuses to the Amps High and Amps Low leads (pins 24 and 25) on the EMS 37-pin Main Sensor Harness. Unscrew the two smaller screws on the ammeter shunt. Slide the ring terminals onto them and screw them back into the base. Connect the "Amps High" lead to the side of the shunt marked by "H" in Figure 77; connect the "Amps Low" lead to the side marked by "L".

If you find that the current reading displayed on the EMS page is the opposite polarity of what you want, swap the two signal inputs (Amps High and Amps Low) to obtain the desired result.

It is extremely important that you secure all loose wires and ensure that exposed terminals cannot touch or short out to other objects in the plane. All metal on the shunt is at the same voltage as–and carries the same risks as–the positive terminal on the battery. Improperly installing the ammeter shunt can result in high current flow, electrical system failure, or fire.

GRT CS-01 and CS-02 Hall Effect Current Sensor

These sensors are available from GRT Avionics, and can be used as alternatives to the AMPS SHUNT sensor supplied by Dynon Avionics in its EMS kits for measuring DC current flow in your electrical system. Support for the CS-02 was added in SkyView Software v13.0 with SkyView EMS Sensor Definition File Revision 46371 dated 2015-07-16 (and later).

Reference the documentation included with the CS-01 or CS-02 for additional connection details.

The GRT CS-01 can monitor DC current up to +/- 100 Amps.
The GRT CS-02 can measure DC current up to +/- 50 Amps.

If you purchase a Dynon Avionics EMS sensor / harness kit, the AMPS SHUNT will be included in the kit; it cannot be returned for refund.

The GRT CS-01 and CS-02 do not connect to Pin 24/25 (Amps Shunt +/- Input). If you are converting from a Dynon Avionics EMS-D10, EMS-D120, or FlightDEK-D180, you must change your wiring per the instructions below.

Identify the power cable for which you wish to monitor current flow. Disconnect one end and route that cable through the CS-01/CS-02 "donut" and reconnect the cable. Note the polarity (arrow) shown on the sensor. To monitor “Positive” current flow, the arrow should point to the source of power (alternator, battery). If, after installation, the direction of current flow is not (what you consider) correct, reinstall the sensor so the arrow points in the opposite direction.

Connect the three CS-01/02 wires to the SV-EMS-220/221 37-pin connector:

CS-01 / CS-02 Wire Color	EMS Harness Wire Color	SV-EMS-220/221 Pin Number	Function
Black	Black	Any of 3, 5, 13, 16, 17, or 30 It is acceptable to share this Ground with other sensors.	Ground
Blue	White/Red It is acceptable to share this pin / wire with other sensors; see Table 32 above.	18 (+5V) It is acceptable to share this pin / wire with other sensors; see Table 32 above.	Power
Green	Any of Pin 8 (Brown), or Pin 22 (Violet/Yellow), or Pin 23 (Violet/Green), or Pin 31 (White/Orange)		Signal

Table 62 – GRT CS-01 / CS-02 EMS Connections

The CS-01 / CS-02 have some special considerations during setup. Configure the CS-01 using the following instructions:

- Go to SETUP MENU >EMS SETUP > SENSOR INPUT MAPPING. Choose one of Pins 8, 22, 23, or 31, as is physically connected above.
- For the “FUNCTION” column selection, choose “AMP”
- For the “SENSOR” column selection, choose one of the AMMETER HALL EFF (offset value) (GRT CS-01) or (GRT CS-02), where offset value is chosen per the following:

  - Because each individual CS-01 and CS-02 varies somewhat, configuring the CS-01 and CS-02 typically requires an amps "offset" value to be utilized. SkyView provides 17 different offsets for each sensor via different choices in the SENSOR column. These contain offsets that range from "-8" (offset of -8A) through "+8" (offset of +8A). If you wish the CS-01 or CS-02 value on your SkyView EMS to display most accurately at zero current, choose the offset that displays "0A" when zero current is flowing through system. This can be done by turning off all avionics power and operating SkyView on its SV-BAT-320. If you wish the current to display most accurately at normal current draw, choose whichever of the 17 offset values provides the most accurate current reading. (This will require some experimentation.)
- Set the name column to “AMPS” (default) or create a custom name.

Carburetor Temperature Sensor

The carburetor temperature sensor may be connected to any general purpose input pin on the SV-EMS-220/221’s D37, however, we recommend that it be connected to pin 23 on this connector.

Install the carburetor temperature sensor in the venturi area at the point where ice first begins to form. This is located after the main nozzle, before the throttle valve. You must remove the plug in the carburetor housing below the throttle valve. On four-cylinder engines which use the Marvel Schebler MA-3 carburetors, this plug is located on the forward side. On six-cylinder engines using the MA-4 carburetor, the plug is located on the rear. If your carburetor is not drilled and tapped for the plug, you must remove the carburetor from the engine and drill out the lead plug in the appropriate spot. Tap the hole with a ¼-28 tap. Remove all chips and burrs before reinstalling.

Route either of the two wires to an electrical ground on the SV-EMS-22X D37 connector. Route the other wire to the general purpose input of your choice.

Note: If you are converting a Dynon Avionics D10/D100 product installation to a SkyView installation, you should remove any resistor that is connected to the existing carburetor temperature sensor. It is not needed when used with SkyView.

Rotax CHT Sensors

The Rotax CHT sensors may be connected to any general purpose input pin on the SV-EMS-220/221’s D37, however, we recommend that they be connected to pins 4 and 22 for left and right signals, respectively.

Crimp *bare ¼*” female Faston terminals (6.3x0.8 according to DIN 46247) onto the ends of two general purpose input wires on the EMS 37-pin Main Sensor Harness. Locate the left-side CHT sensor screwed into the bottom side cylinder head 2; slide the Faston connected to one of the general purpose inputs onto it. Locate the left-side CHT sensor screwed into the bottom side of cylinder head 3; slide the Faston connected to the other general purpose input onto it.

Note: If you are converting a Dynon Avionics D10/D100 product installation to a SkyView installation, you should remove any resistor that is connected to the Rotax CHTs. They are not needed when used with SkyView.

Trim and Flaps Position Potentiometers

Position potentiometers may be connected to any general purpose input pin on the SV-EMS-220/221's D37 and must be calibrated according to the instructions found in the EMS Sensor Calibration Section. The number of position potentiometers in any installation is limited by the number of unused general purpose input pins on the SV-EMS-220/221's D37 connector. The tables in the Example Engine Sensor and Transducer Installations Section contain recommended input pins for position potentiometers.

Dynon Avionics does not sell trim or flaps position sensors. These are normally included with, or added onto, their respective servos.

Most flap and trim sensors are potentiometers (variable resistors) which require power and ground inputs, and supply an output that is a function of position. These potentiometers come in a variety of resistance ranges, but are typically 1 kΩ, 5 kΩ, 10 kΩ, and 20 kΩ. All of these values will work properly with the SV-EMS-22, as there is a calibration required. Connect Pin 18 (+5 Volts Auxiliary) from the SV-EMS-220/221 to the +5 Volts input on your trim/flap position sensor. Connect the ground input on the sensor to a ground common to the SV-EMS-220/221's signal ground. Connect the output of the sensor to the desired general purpose input. For physical installation, refer to the instructions that came with your position sensor.

If you are using the output from a Ray Allen servo or sensor, connect per the chart below.

Note that you may need access to the SV-EMS-220/221's +5 Volts Auxiliary (Pin 18) for other sensors, so make allowances for breaking out the connection to other areas.

Ray Allen Trim Motor Position Sensor Wire Color	EMS Harness Wire Color	SV-EMS-220/221 Pin Number	Function
White / Blue	Black	Any of 3, 5, 13, 16, 17, 30	Ground It is acceptable to share this Ground with other sensors.
White / Orange	White/Red It is acceptable to share this pin / wire with other sensors; see Table 32 above.	18 It is acceptable to share this pin / wire with other sensors; see Table 32 above.	Power (+5V)

White / Green	Varies	Any of 4, 6, 7, 8, 9, 10, 11, 12, 20, 21, 22, 23, 31	Signal

Figure 79 – Ray Allen Trim Motor Position Sensor Wiring

Trim and flaps position potentiometers must be calibrated. Your SkyView display utilizes onscreen wizards that help you do this. Go to the EMS Calibration Menu to access these wizards (SETUP MENU > HARDWARE CALIBRATION > EMS CALIBRATION).

The take-off position will be shown as a green line on the trim widget. If you do not want this marking on your trim widget, press NONE during the take-off position portion of the trim calibration.

Coolant & Other Fluid Pressure Sensors

Mount the pressure sensor securely using an Adel clamp or other method such as a sensor mounting block on the firewall.

Before installing Kavlico sensors, reference Dynon Avionics Technical Advisory website (https://www.dynonavionics.com/support-bulletins.php) for important information regarding Kavlico sensors sold by Dynon.

The pressure sensor has a 1/8-27 NPT pipe thread fitting. Use appropriate adapters and materials to remotely mount the sensor. Do not mount the sensor directly to the engine's pressure port.

DO NOT mount sensor directly to engine or other areas of high vibration. Always mount sensor remotely to minimize vibration effects.

DO NOT thread sensor into pressure port by plastic portion of sensor. Doing so will damage the sensor. Use a wrench on the metal hex portion of sensor to tighten.

The pressure port must have a pressure fitting with a restrictor hole in it. Restrictor holes minimize leakage in the event of a failure of any of the items downstream of the pressure port connection, allowing time for an emergency landing.

As of 2020, Dynon no longer supplies the original 15, 50, 75, or 150 PSI Kavlico sensors (P/Ns 101690-000, 101716-000, 101692-000, 101693-000). For new installations, select the appropriate sensor for the airplane's coolant or other fluid system:

- *Use the new 15 PSI Kavlico sensor (P/N 103755-000) for fluid systems with 0.6–15 PSI requirements.*

- *Use the new 150 PSI Kavlico sensor (P/N 103757-000) for fluid systems with 6–150 PSI requirements.*

If both the 50 PSI and 150 PSI sensors meet the airplane's coolant or other fluid system requirements, then use the higher pressure 150 PSI sensor.

If neither of the above are suitable for the airplane's airplane's coolant or other fluid system:

- *Use the new 50 PSI Kavlico sensor (P/N 103713-000) for fluid systems with 2–50 PSI requirements.*

The new sensors are a direct mechanical and electrical replacement for the original sensors. Updated software sensor definitions are available from Dynon Avionics' software download page.

Figure 80 – Original 1/8-27 NPT 0-15 PSI Sensor (P/N°101690-000)

Figure 81 – New 1/8-27 NPT 0.6-15 PSI Sensor(P/N°103755-000) (Shown Without Wiring Connector)

Retrofit Legacy Fluid Pressure Sensor with Kavlico Fluid Pressure Sensor

Prior to 2012, Dynon Avionics utilized non-Kavlico sensors that are no longer supplied. If you are retrofitting a Kavlico Fluid Pressure Sensor into a system which used the legacy fluid pressure sensor supplied by Dynon Avionics (see below), the Power (Red wire) and Ground (Black wire) can be “tapped” from the Manifold Pressure (MAP) sensor that is likely already installed on the engine. The Sensor output (Green wire) is changed from the legacy sensor to the Kavlico sensor.

Kavlico Coolant Pressure Sensor Wire Color	EMS Harness Wire Color	SV-EMS-220/221 Pin Number	Function
Red	White / Red It is acceptable to share this pin / wire with other sensors; see Table 32 above.	18 It is acceptable to share this pin / wire with other sensors; see Table 32 above.	Power (5V)

Black	Black It is acceptable to share this Ground with other sensors.	Any of Pin 3, 13, 16, 17, or 30 It is acceptable to share this Ground with other sensors.	Ground
Green	Varies	Pin 6 (recommended) Any of Pin 4, 6, 7, 8, 9, 10, 11, 12, 20, 21, 22, 23, or 31	Sensor output

Figure 82 - Kavlico Liquid Pressure Sensor Wiring

Legacy Dynon Avionics-Supplied Fluid Pressure Sensor (P/N 100411-000)

As of 2012, Dynon Avionics no longer supplies this sensor. For new installations, use the Kavlico fluid pressure sensors (above). To retrofit an installation of this legacy sensor with a Kavlico liquid pressure sensor, see section above.

1/8-27 NPT
0-30 PSI
P/N 100411-000

Figure 83
Legacy Dynon Avionics
Fluid Pressure Sensor

For plug-compatible replacement of this sensor in existing installations, purchase from Aircraft Spruce – 0-30 PSI P/N 10-05471.

For the legacy Dynon Avionics Supplied Fluid Pressure Sensor, if you use Teflon tape or other seal, ensure the sensor casing still maintains a good connection to Ground.

The Dynon Avionics-supplied fluid pressure sensor is a 0-30 psi sensor (Dynon Avionics P/N 100411-000). First, mount the pressure sensor to a fixed location using an Adel clamp or other secure method. The pressure sensor must *not* be installed directly to the engine due to potential vibration problems. Next, connect the sensor to the fluid line using appropriate hoses and fittings. Its pressure port has a 1/8-27 NPT pipe thread fitting; you may need adapters to connect to the pressure port on your engine. Locate (or drill and tap) the pressure port along the fluid line. This port must have a pressure fitting with a restrictor hole in it. This restrictor hole ensures that, in the event of a sensor failure, fluid leakage rate is minimized, allowing time for an emergency landing.

Crimp a standard ¼" female Faston onto one of the grounds coming from the SV-EMS-220/221's EMS 37-pin Main Sensor Harness. Crimp another ¼" female Faston onto the wire that corresponds to the desired general purpose input. Push the two Fastons onto the two terminals on the fuel pressure sensor. Polarity is not important.

Note: If you are converting a Dynon Avionics D10/D100 product installation to a SkyView installation, you should remove any resistor that is connected to the existing fluid pressure sensor. It is not needed when used with SkyView.

Coolant Temperature Sensor

The coolant temperature sensor may be connected to any of Pins 4, 6, 7, 8, 9, 10, 11, 12, 20, 21, 22, 23, or 31 on the SV-EMS-220/221.

The coolant temperature sensor needs to be installed according to the directions of your engine's manufacturer. Dynon Avionics sells temperature sensors with both 5/8-18 UNF (Dynon Avionics P/N 100409-001) and 1/8-27 NPT (Dynon Avionics P/N 100409-000) threads; these are the same as those used by the oil temperature inputs. If neither of these threads matches those in your coolant line, you will need to use adapters or drill/tap your own. Using a crush washer between the sensor and the mating line, screw the sensor into the fitting. Do not over tighten.

Route the wire from the desired general purpose input pin on the SV-EMS-220/221's EMS 37-pin Main Sensor Harness to where the coolant temperature sensor is mounted. When routing the wires, make sure that they are secured, so they will not shift position due to vibration. Strip ¼" of insulation off the end of the wire. Crimp a #10 ring terminal onto the end of the wire. Ensure that a good connection is made between the wire and the connector. Unscrew the nut from the stud on the coolant temperature sensor. Slip the ring terminal onto the stud and secure the nut over it.

Note: If you are converting a Dynon Avionics D10/D100 product installation to a SkyView installation, you should remove any resistor that is connected to the existing coolant pressure sensor. It is not needed when used with SkyView.

Rotax Pre-installed Coolant Temperature Sensor: Wire the coolant temperature sensor in the same way as shown above for the Dynon Avionics-supplied sensor.

General Purpose Temperature Sensor

Any temperature sensor provided by Dynon Avionics may be utilized as a general purpose temperature sensor on any of Pins 4, 6, 7, 8, 9, 10, 11, 12, 20, 21, 22, 23, or 31 on the SV-EMS-220/221.

For example, you may connect an SV-OAT-340 sensor and configure it as a general purpose thermometer (e.g., for cabin temperature). Connect one of the wires to the input pin, and the other wire to any available EMS Ground, any of Pins 3, 5, 13, 16, 17, or 30.

Rotax 914 Air Box Temperature

Rotax supplies one Skykit Air Box temperature sensor on the 914 for connection to the 914 Turbo Control Unit (TCU). If you wish to monitor Air Box temperature on SkyView, install a second Skykit Air Box temperature sensor and connect it to any of Pins 4, 6, 7, 8, 9, 10, 11, 12, 20, 21, 22, 23, or 31 on the SV-EMS-220/221. Connect one of the wires to the input pin, and the other wire to any available EMS Ground, any of Pins 3, 5, 13, 16, 17, or 30. Configure the general purpose input pin you select as SKYKITS AIRBOX TEMP.

Contacts

Contacts may be connected to any general purpose input pin on the SV-EMS-220/221's D37. The number of contacts in your SkyView system is only limited to the number of unused general purpose input pins on the connector.

Dynon Avionics does not sell contacts or switches.

Contacts are used for a variety of purposes, such as monitoring canopy closure. The EMS Software reads the voltage state of general purpose inputs. To configure them as contacts, use two voltage ranges in your sensor setup. Set one to 0-2V, and the other from 2-5V. SkyView will then report whether each input is open (no connection to ground, which is the 2-5V state) or closed (connection to ground, which is the 0-2V state). You must ensure that when closed, the contact connects to a ground common to the SV-EMS-220. Generally, the voltage on the general purpose inputs should not exceed 15 volts, but the inputs are protected against spikes up to 30V. Generally, it is safe to connect a general purpose input up to any 12V electrical signal (such as monitoring whether power is connected to a 12V fuel pump), but the same is not true for a 24V aircraft – connecting 24V (continuous) to a general purpose input will damage the input.

General purpose input pins are 0 to 5 volt inputs. While higher voltages are tolerated, the voltage will not read higher than 5 volts. Therefore, only use voltages between 0 and 5 volts in your sensor setup.

Contacts Used for Retractable / Amphibious Landing Gear and Related Alerts

The simplest method to monitor landing gear state is to use a single contact as there are only two states to monitor and it is mechanically and electrically easiest to install. Multiple gear contacts can be independently monitored so that the status of all wheels can be indicated. Be sure to use unique names so that the gear up/down logic works properly.

To enable audio alerts related to landing gear status, the contact used for monitoring the status of landing gear must be named GEAR, GEAR1, GEAR2, GEAR3 or GEAR4:

SETUP MENU > EMS SETUP > SENSOR INPUT MAPPING > C37 Pxx >

> FUNCTION: CONTACT

> SENSOR: CONTACT

> NAME: GEAR

To configure the GEAR contact alert for retractable landing gear:

- Install the GEAR contact that when the landing gear is up, the state of the contact is UP and when the landing gear is down, the state of the contact is DOWN.
- SETUP MENU > AIRCRAFT INFORMATION:

> LANDING GEAR TYPE: RETRACT

> LANDING GEAR CHECK SPEED: (set as appropriate for your plane)

> LANDING GEAR OVERSPEED: (set as appropriate for your plane)

To configure the GEAR contact alert for amphibious landing gear:

- Install the GEAR contact that when the amphibious landing gear is configured for landing on water, the state of the contact is WATR and when the amphibious landing gear is configured for landing on land, the state of the contact is LAND.
- SETUP MENU > AIRCRAFT INFORMATION:

  > LANDING GEAR TYPE: AMPHIB

  > LANDING GEAR CHECK SPEED: (set as appropriate for your plane)

  > LANDING GEAR OVERSPEED: (set as appropriate for your plane)
- SETUP MENU > SYSTEM SETUP > AUDIO SETUP > LANDING GEAR > VOICE

General Purpose Thermocouple

You may configure the SV-EMS-220 to monitor two J or K type thermocouples in addition to the twelve thermocouples available on the SV-EMS-220's D25 connector. Note that the SV-EMS-221 uses these four pins for Rotax 912 is communication, and, therefore, these pins are not available for thermocouple use on the SV-EMS-221. Dynon Avionics does not supply a specific general purpose thermocouple sensor for this purpose. However, our standard EGT and CHT sensors will work, as will any other J or K type thermocouple.

The following table revisits which SV-EMS-220 pins are compatible with general purpose thermocouples.

Pin	Wire Color	Function
27	Not supplied	General Purpose TC Input 1+
28	Not supplied	General Purpose TC Input 1-
36	Blue	General Purpose TC Input 2+
37	Green	General Purpose TC Input 2-

Table 63 – SV-EMS-220 D37 General Purpose Thermocouple Pins

If you use the second general purpose thermocouple input on pins 36 and 37, it is necessary to remove the blue and green wires from these pins on the EMS 37-pin Main Sensor Harness.

Dynon Avionics sells both J and K type thermocouple wire which may be used to connect the desired thermocouple to the SkyView. Ensure you order the correct wire type for the thermocouple you intend to use. Crimp a Female DSUB pin on the end of each wire, and plug them into the SV-EMS-220's EMS 37-pin Main Sensor Harness D37. Polarity is important, so ensure that you are routing the positive side (yellow for K-type; white for J-type) of the thermocouple to pin 27 or pin 36 on the 37-pin harness, and the negative side to pin 28 or pin 37.

External EMS Warning Light

SV-EMS-220/221 D37 pin 29 can be wired and configured as an External Alarm Light

To wire EMS D37 pin 29 as an External Alarm Light, you may connect any standard LED or incandescent lamp (1.5 Watt maximum), used during EMS-related “red” warning alarm conditions. Ensure that the LED or lamp is designed for the voltage of your system. Mount it to your panel according to its recommendations. Connect one of the lamp’s leads to your plane’s power. Connect the other lead to pin 29 on the SV-EMS-220/221 37-pin wiring harness. During an alarm condition, this pin is connected to ground, causing current to flow through the lamp.

Aircraft Spruce P/N 17-410 is an example of a light that will work for this application. An LED and resistor in series will also suffice. If you use an LED as the indicator, you must choose a resistor that delivers the appropriate current to the LED, and can accommodate the power required for its current and voltage drop. Also note that the power and ground connections on LEDs are not reversible.

After installation, you can test the External EMS Warning Light:

SETUP MENU > HARDWARE CALIBRATION > EMS CALIBRATION > EXTERNAL EMS WARNING LIGHT TEST > (one more right click to enter the menu and temporarily illuminate the External EMS Warning Light).

Engine Information

Use the Engine Information Wizard (SETUP MENU > EMS SETUP > ENGINE INFORMATION) to specify engine type, horsepower rating, redline and cruise RPM, and set HOBBS and TACH time (if installation is in a non-zero-time engine).

If you have an engine type that is in the list, please choose the appropriate engine. This will allow the system to perform some calculations that are specific to that engine, such as % power (Lycoming / Continental only) and special operating limitations (Rotax only). If your engine is not listed, choose "Other."

Horsepower is used to do some of the % power calculations (Lycoming/Continental engines only) and the auto Rich-of-Peak and Lean-of-Peak detection. Set it to the engine manufacturer's rated HP for initial usage. You may need to adjust this number in order to get all calculations working correctly.

If you are getting an auto Lean-of-Peak indication that is coming on too early, before the engine actually peaks while leaning, lower this number. It is not meant to be a measure of actual horsepower produced, as engines that are more efficient will act as if they are lower horsepower in the calculation. This will be particularly true if you are running a higher compression ratio than the stock charts are based upon.

Cruise RPM is used when calculating tach time. Tach time is a measure of engine time normalized to a cruise RPM. If you spend one hour at your cruise RPM, tach time will increment one hour. If you spend 1 hour at 1/2 your cruise RPM, tach time will only increase by 1/2 hour. Tach time is defined as TIME x (CURRENT RPM / CRUISE RPM).

Hobbs time is a simple timer that runs whenever the oil pressure is above 15 PSI or the engine is above 0 RPM.

INHIBIT ENGINE ALERTS AT BOOT: NO | YES
When set to YES, all engine alerts, both audio and visual, will occurs until after the first engine start, or 5 minutes, whichever comes first. This option can help inhibit nuisance alarms before the engine is started. When set to NO, engine alerts are always active.

ALARM LIGHT: SOLID AFTER ACK | OFF AFTER ACK
If you have connected an External Alarm Light to SV-EMS-220/221 pin 29, the Alarm Light setting determines how the light behaves after alarm acknowledgement. It can be set to either SOLIID AFTER ACK, which leaves the light lit continuously after acknowledgement (until the alarm condition ceases) or OFF AFTER ACK, which turns the light off after an alarm has been acknowledged.

DISPLAY COOLANT INSTEAD OF CHT: Set to CLNT if the manufacturer of the engine requires that the label for the temperature of the engine block be displayed as “CLNT” (coolant) rather than the more common label “CHT” (Cylinder Head Temperature). The default of this option is “CHT”. Note that not every Rotax engine has this requirement, only newer Rotax engines. Before changing the default of this setting, consult your Rotax (or other manufacturer) engine manual.

Rotax 912 Behavior

Setting ENGINE TYPE to ROTAX 912 pre-configures some engine settings for a Rotax 912 engine. SkyView will automatically configure and dynamically change the oil temperature and tachometer scales and alert thresholds in accordance with Rotax’s recommended ranges, described in detail below. When this mode is selected, EMS SETUP > SENSOR SETUP > OIL TEMPERATURE AND TACHOMETER settings are unavailable.

Tachometer for Rotax 912:

When OIL TEMP < 120°F, the TACHOMETER displays these ranges:

- 0-1400 *and* 4000-6000 RPM in RED
- 1400-1800 *and* 2500-4000 RPM in YELLOW
- 1800-2500 RPM in GREEN

When OIL TEMP > 120°F, the TACHOMETER displays *different* ranges:

- 0-1400 *and* 5800-6000 RPM in RED
- 1400-1800 *and* 5500-5800 RPM in YELLOW
- 1800-5500 RPM in GREEN

At 0 RPM, tachometer alerting is inhibited. When RPM advances above 0, the tachometer alert is inhibited for 10 seconds to avoid nuisance alarms as the engine starts.

The alarm type for the tachometer is the “self-clearing” type.

Oil Temperature Gauge for Rotax 912:

When OIL TEMP < 190°F, the OIL TEMP gauge displays these ranges:

- 100-120 and 230-266° F in YELLOW
- 120-190° F in GREEN *if OIL TEMP has been above 190° F "more recently" than OIL TEMP was below 120° F;* otherwise 120-190° F is displayed in BLACK OUTLINED IN WHITE
- 190-230° F in GREEN
- 266-280° F in RED.

When OIL TEMP is > 190° F, the OIL TEMP gauge will display *different* ranges:

- 100-120 *and* 230-266° F in YELLOW
- 120-230° F in GREEN
- 266-280° F in RED

The alarm type for oil temperature is the "self-clearing" type.

EMS Sensor Definitions, Mapping, and Settings

All sensors must be defined, mapped to SV-EMS-220/221 pins, and have their settings configured. This section describes how sensors are defined, mapped, and set in SkyView.

EMS Sensor Definitions

All EMS sensor installations require a SkyView Sensor Definitions file. This file provides characterizations of all sensors that SkyView supports, and is occasionally updated to add additional supported sensors and correct issues with existing sensors. The most current version of the SkyView Sensor Definitions file is preloaded onto each display prior to shipment. The most current version of the SkyView Sensor Definitions file can be downloaded from http://downloads.dynonavionics.com. If you have more than one SkyView display, and the SkyView Sensor Definitions file on each display is different from one another, a Warning message will be displayed:
EMS SFG FILE MISMATCH.

If you need to update the SkyView Sensor Definitions file, download the file and use the instructions found in the How to Load and Delete Files Section.

The SkyView Sensor Definitions file has a .sfg file extension. *This file is not automatically shared between displays.* It must be loaded onto *each display in the system*.

EMS Sensor Input Mapping

In order to save installers time, Dynon Avionics provides preconfigured sensor mapping and settings files which support popular four and six-cylinder engine installations. All of the installations mentioned in the Example Engine Sensor and Transducer Installations Section have preconfigured mapping and settings files that are available for download at http://downloads.dynonavionics.com.

Settings for SV-EMS-220/221 pin mapping, ranges, widget graphical properties, etc. are automatically shared between multiple SkyView displays.

If your engine installation is listed in the Example Engine Sensor and Transducer Installations Section, we recommend you install one of the sensor mapping and settings files onto the SkyView display using the instruction found the How to Load and Delete Files Section. Then update or modify the sensor map and settings based on your installation.

Note that it is critical that you should check every setting before operating your engine with them as these files are only a starting point. While efforts were made to set up temperature, pressure, and other ranges to reasonable starting points, Dynon Avionics makes no claim that they are correct for your engine, as slightly different engines may have different limits.

Use this section as a guide when you review and update the sensor map and settings that were sourced from the preconfigured file. Also use this section if you are creating a sensor map and settings from scratch.

EMS Sensor Mapping Explanation

The SkyView system must be configured to map SV-EMS-220/221 pin numbers to physical sensors. This section contains an explanation of what it means to define a sensor for mapping purposes and also contains instructions on how to map sensors mentioned in this section to pins on the SV-EMS-220/221. Mapping can be accomplished using two methods: you can use a premade file as mentioned above or you can manually map engine sensors to EMS module pins.

All sensors and transducers are mapped in the Sensor Input Mapping Wizard. As mentioned earlier, some pins are compatible with a variety of sensors, while other pins have fixed functionality. A sensor is defined in the Sensor Input Mapping Wizard by the following parameters:

- Pin #–the pin or set of pins the sensor is connected to
- Function–the phenomenon the sensor measures (e.g., pressure and temperature)
- Sensor–the physical part used, for example 0-80 PSI Fluid Pressure (100411-001)
- Name–a six-character field that names the sensor for use by the pilot in flight.

Loading a premade sensor mapping file onto SkyView can save installation time. These files define sensors with the four parameters mentioned.

Table 64 shows an example oil pressure sensor map on pin 6 of the SV-EMS-220/221 D37 connector.

PIN #	FUNCTION	SENSOR	NAME
C37 P6	PRESSURE	0-150 PSI FLUID PRESSURE (100411-002)	OIL

Table 64 – Example Sensor Map

Manual Sensor Mapping

Appendix D: SV-EMS-220/221 Sensor Input Mapping Worksheet is a useful tool during sensor mapping. This section is intended for use only if the premade sensor mapping file does not contain the sensor definitions needed for your installation.

Go to the Sensor Input Mapping Wizard (SETUP MENU > EMS SETUP > SENSOR INPUT MAPPING…) and use the following procedure to manually map a sensor or transducer:

1. Scroll through the different parameters using a combination of joystick turns and movements in the up, down, left, and right motions. The selected parameter is highlighted and its text is enlarged.
2. Press SELECT to open the parameter for editing.
3. Edit the parameter using a series of joystick turns and movements.
4. Save the parameter edit by pressing ACCEPT or by moving either joystick to the right or the left. Press CANCEL to back out of the parameter edit mode without saving.

EMS Sensor Settings

Mapped sensors that are displayed on the Engine Page should have their alert and graphical properties appropriately configured. This section explains the settings that are required for EMS sensors, contains instructions for manually configuring sensor settings, and uses several sensor settings examples to further explain sensor settings.

SkyView EMS sensor settings are defined by the following parameters in the Sensor Setup Menu:

- ALARM
- MAXIMUM GRAPHICAL DISPLAY
- MINIMUM GRAPHICAL DISPLAY
- SHOW SENSOR UNITS
- RANGE (1-5)

EMS Sensor Alarms

EMS alerts (audio, EMS indicator light) are triggered when a sensor goes into a RED range, and set to SELF-CLEAR or LATCHING below. There are three alarm options for EMS sensors:

- OFF – no alarm for the sensor.

- SELF-CLEAR – When an alert is triggered, it is annunciated both on the engine page and in the messaging system. When the alert condition ceases, all of these annunciations cease, even if the precise alert message was not acknowledged by pressing the rightmost button on the display to bring up the message window.
- LATCHING – When an alert is triggered, it is annunciated both on the engine page and in the messaging system. However, when the alert condition ceases, the message notification area above the rightmost button will continue to show the unacknowledged alert state until the alert message is viewed in the message window, even though the offending parameter has returned to within limits. This behavior ensures that the pilot is aware that an alert was triggered, even though the condition no longer exists.

Reference the SkyView Pilot's User Guide for information regarding how sensor alarms show up onscreen during operation.

EMS Sensor Graphical Display Limits

The settings here define the minimum and maximum values that will be shown graphically on the sensor's gauge. Effectively, this is the start and stop point of the gauge. If the indicator you choose for this value shows digital numbers for the value, they will not be limited by this setting. The system will not allow you to set these numbers higher or lower than the sensor can support.

SHOW SENSOR UNITS (YES | NO)

Some custom developed sensors may warrant a graphical widget that is not expressed in any of the units that SkyView's EMS supports. In such cases, you can suppress the display of the widget's actual unit of measurement (volts, degrees, etc.) by setting SHOW SENSOR UNITS to NO.

EMS Sensor Ranges

The order that ranges are configured has no effect on the functionality or display of the gauge. Ranges are defined with the following properties: enable, color, top, and bottom. Enable is used to tell SkyView if that range is on or off. If it is off, it will not be considered or displayed.

Each gauge can consist of up to five ranges. If fewer ranges are desired (such as a contact), set the unneeded ranges ENABLE: NO. Each range has an associated color: Black, Red, Orange, Yellow, Green, Blue, Violet, White, or Cyan. If a range is not defined, it is considered black, so there is not generally a reason to configure black ranges. If ranges overlap, the following rules apply:

- Red trumps Yellow
- Yellow trumps Green
- Green trumps Blue / Cyan / Orange / Violet / White / Yellow (these are equal priority)
- Blue / Cyan / Orange / Violet / White / Yellow (these are equal priority) trumps Black

For example, you could set up two ranges for the same gauge, each 0-10, one Red, and one Green, and that range would be Red. To further illustrate this behavior, if another range for that same gauge was configured from 5-15 and set to Yellow, only 10-15 would be Yellow.

The two edge ranges are considered to go on "forever," so if a gauge is set up as Yellow from 10 to 20 and Red from 20 to 30, and the sensor reads 35, it will still be considered Red since that is above the highest range. It will be considered Yellow below 10. If you wish for this not to occur, you must make your edge ranges Black.

Alarms are only triggered when ALARM: SELF-CLEAR or LATCHING and the value enters a Red range on a gauge. When values enter into a Yellow range, their numerical value is highlighted in Yellow to annunciate the caution condition.

Fuel Computer Configuration

Setting Pulses/Gallon

To find and configure the pulses/gallon value associated with your fuel flow transducer:

If you have the **Floscan 201B (Dynon Avionics P/N 100403-001)**, this number can be found on the tag that came with the transducer. The pulses/gallon value for transducer is 10 times the number shown after the dash. So, if your transducer had the tag that is labeled “16-2959”, you would enter a pulses/gallon value of 29590 in the pulses/gallon section of SETUP MENU > HARDWARE CALIBRATION > EMS CALIBRATION > FUEL FLOW CALIBRATION. If you have lost your tag, a starting pulses/gallon of 30000 will be close enough to begin using the function.

If you have the **EI FT-60 “Red Cube” (Dynon Avionics P/N 100403-003)**, enter a starting K-VALUE of 68000 under SETUP MENU > HARDWARE CALIBRATION > EMS CALIBRATION > FUEL FLOW CALIBRATION.

Over time, you may notice that the instrument’s computation of gallons or liters remaining (based on fuel flow) is either high or low. This is a result of many factors, including individual installation. To correct for this, follow this procedure:

Over several fill-ups keep a running total of the amount of fuel added. Keep a running total of the GALS (or LTRS) USED parameter over this same time span.

Perform the following calculation: $\frac{FuelUsed(computed)}{FuelFilled(actual)}$. You should obtain a number that is close to 1. We’ll call this number, FuelFlowRatio.

Now perform this calculation: *CurrentPulsesPerGallon*FuelFlowRatio*. Enter this number as your new pulses/gallon value.

Observe the results over your next tank for accuracy. Repeat the above if necessary.

The general rule of thumb: if your GALS (or LTRS) USED reads higher than you expect, *increase* the pulses/gallon; if it reads lower than you expect, *decrease* the pulses/gallon.

If your engine has a return fuel flow sensor, note that there is a second pulses/gallon setting that is mapped to a second set of input pins. When a second fuel flow sensor is connected and the pulses/gallon is adequately set, the fuel seen returning through the second fuel flow sensor is automatically subtracted from the flow that is seen through the primary sensor. If you do not have a second fuel flow sensor, you may ignore this setting entirely.

In SETUP MENU > HARDWARE CALIBRATION > EMS CALIBRATION > FUEL FLOW CALIBRATION, if you change PULS/GAL (C37 P14) or PULS/GAL (C37 P19), for the new value to be active, you must push the ACCEPT button, then the EXIT button. Until you EXIT the menu, the changed value is not used by SkyView (despite the value being changed in the menu).

Fuel Computer Presets

Fuel Computer computations are based on measured fuel flow and the pilot's input of the aircraft's starting fuel state. SkyView offers a few settings that allow the pilot to pre-program full fuel and an optional second "preset" fuel quantity. Once programmed, typical aircraft fuel loads are then quickly recalled under in the EMS > FUEL menu as described in the Pilots User Guide.

There are three fuel computer options, found under SYSTEM SETUP > SYSTEM SETUP > AIRCRAFT INFORMATION. They are only applicable if you have a fuel flow sensor installed:

- TOTAL FUEL CAPACITY – set this to the total usable fuel on board when the tanks are full. Once this is set, the pilot is prevented from accidentally setting more than this amount of fuel on board.
- PRESET FUEL CAPACITY – this can be used to quickly recall a second, non-full starting fuel state. For example, if your tanks have tabs so that you can easily fill to ¾ of your normal full fuel load, you would enter this number here so that you can quickly set your fuel computer to this second preset when you fill to the tabs.
- FUEL ADDED DETECT – When set to yes, SkyView will check for discrepancies between the physical fuel quantity sensors and the fuel computer's calculated fuel load on boot-up. If one is found, SkyView will prompt the user to adjust the fuel computer's fuel state.
- FUEL TANK REMINDER – SkyView can be configured to alert the pilot to switch their fuel tanks at a set time or fuel usage interval (based on the fuel computer's fuel calculations). When enabled, it will periodically annunciate a "Switch Fuel Tank" alert message and audio alert. There is no visible counter for this timer. To configure this feature, set FUEL TANK REMINDER to either TIME or QUANTITY. Then, set the resulting FUEL REMINDER TIME or FUEL REMINDER AMOUNT setting to the desired reminder interval.

Manual EMS Sensor Settings Configuration

Go to the Sensor Setup Menu (SETUP MENU > EMS SETUP > SENSOR SETUP) to manually configure the settings of an EMS sensor. Once there, a list of every mapped sensor is displayed.

Follow this basic procedure to configure sensor settings:

1. *Choose a sensor.* Scroll through the menu to a sensor and move the joystick right to enter to the sensor configuration menu.
2. *Set the alarm.* Scroll to the ALARM configuration line, move the joystick right to enter the Alarm Adjust Menu, choose the appropriate alarm for the sensor, and then press ACCEPT. Press BACK to return to the sensor configuration menu.

3. *Set the graphical display limits.* Scroll to the MAXIMUM and MINIMUM GRAPHICAL DISPLAY lines, move the joystick right to enter the respective menus, adjust the values appropriately - and then press ACCEPT. Press BACK to return to the sensor configuration menu.
4. *Set the ranges.* Scroll the menu and configure enable, color, and top and bottom.
5. *Save the settings.* Press BACK to return to the Sensor Setup Menu. Press EXIT to return to the Main Menu.

The examples on the following pages show four configured sensors: a voltmeter, a contact, RPM, and an oil temperature sensor.

Example Voltmeter Setup

Assume this sensor was mapped on the Sensor Input Mapping Wizard as:

PIN #	FUNCTION	SENSOR	NAME
C37 P1	VOLTS	VOLTAGE MEASURE	MAIN

Table 65 – Example Sensor Input Mapping for C37 P1

Now, we want to configure its alert and graphical properties. Go to the Sensor Setup Menu and open the MAIN VOLTS Page (SETUP MENU > EMS SETUP > SENSOR SETUP > MAIN VOLTS).

Configure MAIN VOLTS with the following properties:

- ALARM: OFF
- MAXIMUM GRAPHICAL DISPLAY: 15.0 VOLTS
- MINIMUM GRAPHICAL DISPLAY: 10.0 VOLTS
- SHOW SENSOR UNITS YES
- RANGE 1
  - ENABLE YES
  - COLOR RED
  - TOP 11.0 VOLTS
  - BOTTOM 10.0 VOLTS
- RANGE 2
  - ENABLE YES
  - COLOR YELLOW
  - TOP 12.0 VOLTS
  - BOTTOM 11.0 VOLTS
- RANGE 3
  - ENABLE YES
  - COLOR GREEN
  - TOP 13.6 VOLTS
  - BOTTOM 12.0 VOLTS
- RANGE 4
  - ENABLE YES
  - COLOR YELLOW

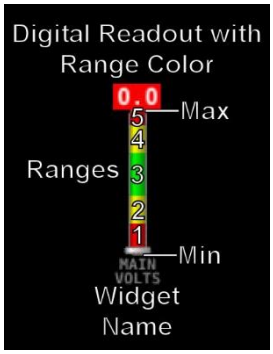

Figure 84
Anatomy of a Widget: Main Volts

  - TOP 14.6 VOLTS
  - BOTTOM 13.6 VOLTS
- RANGE 5
  - ENABLE YES
  - COLOR RED
  - TOP 15.0 VOLTS
  - BOTTOM 14.6 VOLTS

Example Contact Sensor Setup

Assume this sensor was mapped on the Sensor Input Mapping Wizard as:

PIN #	FUNCTION	SENSOR	NAME
C37 P9	CANOPY	Contact	CANOPY

Table 66 – Example Sensor Input Mapping for C37 P9 (as a Contact)

Now, we want to configure its alert and graphical properties. Go to the Sensor Setup Menu and open the CANOPY CONTACT Page (SETUP MENU > EMS SETUP > SENSOR SETUP > CANOPY CONTACT).

Note that although inputs set up as contacts can physically accept up to 15V (so that they can accept nominal aircraft voltage as one of their two states), and up 30V DC as a brief surge, without damaging the input. However, the maximum the EMS can measure is 5.0V. This means that as depicted below, the two measured ranges should be set to 0-2.5V and 2.5-5V to measure the absence and presence of power.

Canopy Contact is a special case input. If a configuration file is loaded containing: canopy_warn_rpm=XXXX
(where that's something between 0 and 9999) then the audio warning "Check Canopy Latch" will play if the engine RPM exceeds the specified RPM level and the canopy input is in the open state. One may generate a .dfg file with only this line, place it on an USB flash drive and load it in SETUP MENU > SYSTEM SOFTWARE > LOAD FILES

Configure CANOPY CONTACT with the following properties:

- ALARM: OFF
- MAXIMUM GRAPHICAL DISPLAY: 5.0 VOLTS
- MINIMUM GRAPHICAL DISPLAY: 0.0 VOLTS
- RANGE 1
  - ENABLE YES
  - NAME OPEN
  - COLOR RED
  - TOP 5.0 VOLTS
  - BOTTOM 2.5 VOLTS
- RANGE 2

Figure 85 Anatomy of a Widget: Canopy Contact

  - ENABLE YES
  - NAME CLOSED
  - COLOR GREEN
  - TOP 2.5 VOLTS
  - BOTTOM 0.0 VOLTS
- RANGE 3
  - ENABLE NO
  - NAME R3
  - COLOR GREEN
  - TOP 20.0 VOLTS
  - BOTTOM 10.0 VOLTS
- RANGE 4
  - ENABLE NO
  - NAME R4
  - COLOR YELLOW
  - TOP 10.0 VOLTS
  - BOTTOM 5.0 VOLTS
- RANGE 5
  - ENABLE NO

Example RPM Setup

Assume this sensor was mapped on the Sensor Input Mapping Wizard as:

PIN #	FUNCTION	SENSOR	NAME
C37 P32/34	RPM	RPM	RPM

Table 67 – Example Sensor Input Mapping for C37 P32/34 (RPM / Tachometer)

Now, we want to configure its alert and graphical properties. Go to the Sensor Setup Menu and open the RPM Page (SETUP MENU > EMS SETUP > SENSOR SETUP > RPM RPM).

Configure RPM with the following properties:

- ALARM: OFF
- MAXIMUM GRAPHICAL DISPLAY: 3000 RPM
- MINIMUM GRAPHICAL DISPLAY: 0 RPM
- SHOW SENSOR UNITS YES
- RANGE 1
  - ENABLE YES
  - COLOR GREEN
  - TOP 2000 RPM
  - BOTTOM 0 RPM
- RANGE 2
  - ENABLE YES
  - COLOR YELLOW
  - TOP 2250 RPM
  - BOTTOM 2000 RPM

Figure 86 Anatomy of a Widget: RPM

- RANGE 3
  - ENABLE YES
  - COLOR GREEN
  - TOP 2700 RPM
  - BOTTOM 2250 RPM
- RANGE 4
  - ENABLE YES
  - COLOR YELLOW
  - TOP 2750 RPM
  - BOTTOM 2700 RPM
- RANGE 5
  - ENABLE YES
  - COLOR RED
  - TOP 3000 RPM
  - BOTTOM 2750 RPM

Example Oil Temperature Sensor Setup

Assume this sensor was mapped on the Sensor Input Mapping Wizard as:

PIN #	FUNCTION	SENSOR	NAME
C37 P7	TEMPERATURE	5/8”-18 NPT FLUID TEMP P/N 100409-000	OIL

Table 68 – Example Sensor Input Mapping for C37 P7 (Oil Temp)

Now, we want to configure its alert and graphical properties. Go to the Sensor Setup Menu and open the OIL TEMPERATURE Page (SETUP MENU > EMS SETUP > SENSOR SETUP > OIL TEMPERATURE).

Configure OIL TEMPERATURE with the following properties:

- ALARM: LATCHING
- MAXIMUM GRAPHICAL DISPLAY: 260 °F
- MINIMUM GRAPHICAL DISPLAY: 80 °F
- SHOW SENSOR UNITS YES
- RANGE 1
  - ENABLE YES
  - COLOR YELLOW
  - TOP 165 °F
  - BOTTOM 80 °F
- RANGE 2
  - ENABLE YES
  - COLOR GREEN
  - TOP 220 °F
  - BOTTOM 165 °F
- RANGE 3
  - ENABLE YES
  - COLOR YELLOW
  - TOP 240 °F
  - BOTTOM 220 °F
- RANGE 4
  - ENABLE YES
  - COLOR RED
  - TOP 260 °F
  - BOTTOM 240 °F
- RANGE 5
  - ENABLE NO
  - COLOR RED
  - TOP 5 °F
  - BOTTOM 0 °F

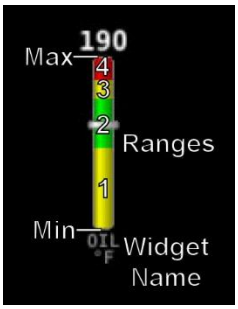

Figure 87 Anatomy of a Widget: Oil Temperature

Note that oil temperature is configured with a latching alarm in this example. If oil temperature ever reaches a range configured as red, an alarm will trigger and a message will show up in the message box on the Main Menu.

EMS Screen Layout Editor

Dynon Avionics offers preconfigured Engine Page layouts that support popular engine sensor installations. Check our website at http://downloads.dynonavionics.com.

All sensor mapping, settings, and widget graphical properties are automatically shared between displays. Installers do not need to transfer files between displays.

Use this wizard to configure the style and layout of the engine and environmental sensor gauges and calculated parameters (e.g., % power) on the 100%, 50%, 20%, and ENGINE BOTTOM BAND Engine Pages.

SkyView Classic and SkyView SE cab display 100%, 50%, and 20% pages.

SkyView HDX can display 100%, 50%, and ENGINE BOTTOM BAND pages.

Note that sensors must be defined, mapped, and configured in order to show up on an Engine Page (reference the EMS Sensor Definitions, Mapping, and Settings Section of this guide for instructions on how to do this).

To use this tool, enter the wizard (SETUP MENU > EMS SETUP > SCREEN LAYOUT EDITOR), then choose the page size to edit. Once in the Screen Layout Editor, follow this procedure:

1. *Add a sensor or info widget to the screen.* Press either SENSOR or INFO to show their respective menus and scroll through available sensors or info parameters, highlight one, and then press ACCEPT or move either joystick to the right to add it to the screen.
2. *Change the style of the widget.* Press STYLE or turn the joystick until the widget's style is acceptable.
3. *Change the size of the widget.* Press SIZE until the widget's size is acceptable.
4. *Change the location of the widget on the screen.*
    a. In SkyView Classic and SkyView SE, move the CURSR joystick in up, down, right, and left directions until the location is acceptable. Hold the joystick in those movement positions for accelerated widget movement.
    b. In SkyView HDX, use the Left knob for movement of the widget to Left (Counterclockwise) and Right (Clockwise). Use the Right knob for movement of the widget Up (Counterclockwise), and Down (Clockwise).
5. *Repeat* the above steps for all sensors that you want displayed on the Engine Page.
6. *Save* the page by pressing SAVE.

Press REMOVE to remove the chosen widget from the screen. Press CANCEL to return to the EMS Setup Menu without saving any changes.

Example widget configuration

This example configures an oil temperature widget using the instructions mentioned above. This is the same oil temperature sensor that was configured earlier (see Example Oil Temperature Sensor Setup).

Open the Screen Layout Editor for the 100% page (SETUP MENU > EMS SETUP > SCREEN LAYOUT EDITOR > 100% PAGE…). Now press SENSOR, scroll to the OIL TEMPERATURE sensor, and press ACCEPT. The following widget shows up on the middle on the screen:

Figure 88 – Oil Temperature Widget

The white box around the widget denotes that that widget is the one that is currently being configured.

You can scroll through the available styles of the widget by pressing STYLE or by turning either joystick. The following widgets illustrate different styles for oil temperature:

Figure 89 – Example Oil Temperature Widget Styles

You can also adjust the size of the widget by pressing SIZE.

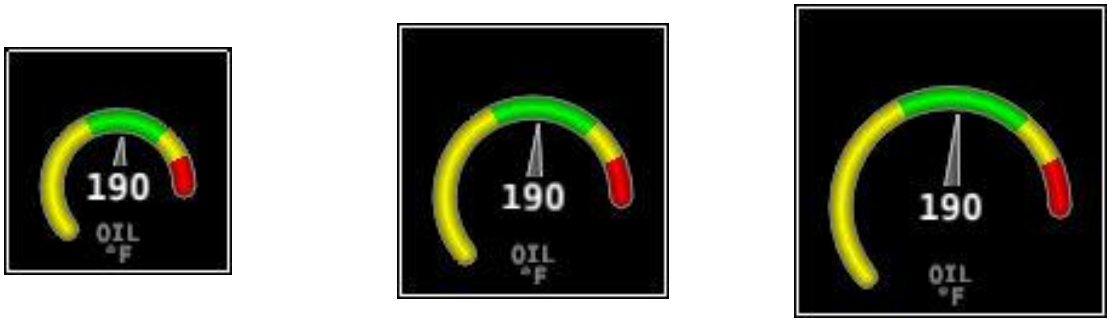

Figure 90 – Example Oil Temperature Widget Sizes

Now, locate the widget on the screen by moving the joysticks left, right, up, and down. Once you have decided on a location for this widget, you can add and configure more widgets (press SENSOR to add another widget and follow the procedure on the preceding page) and then save the page layout by pressing SAVE.

Specific Widget and Info Item Data Requirements

In order for the % Power and LOP/ROP status info items to calculate values, the following data must be present / conditions must be met:

- Barometric altitude (from an SV-ADAHRS-200/201) must be present.
- EMS SETUP > ENGINE INFORMATION > ENGINE TYPE must be set to Lycoming/Continental. Percent power calculations are not available for other engine types at this time.
- EMS SETUP > ENGINE INFORMATION > HORSEPOWER must be set.
- OAT sensor installed / working.
- Fuel flow sensor must be installed and configured.
- MAP sensor must be installed and configured.

EMS Sensor Calibration

Fuel level sensors and position potentiometers must be calibrated. Your SkyView display utilizes onscreen wizards that help you do this. Go to the EMS Calibration Menu to access these wizards (SETUP MENU > HARDWARE CALIBRATION > EMS CALIBRATION).

SkyView HDX ENGINE BOTTOM BAND

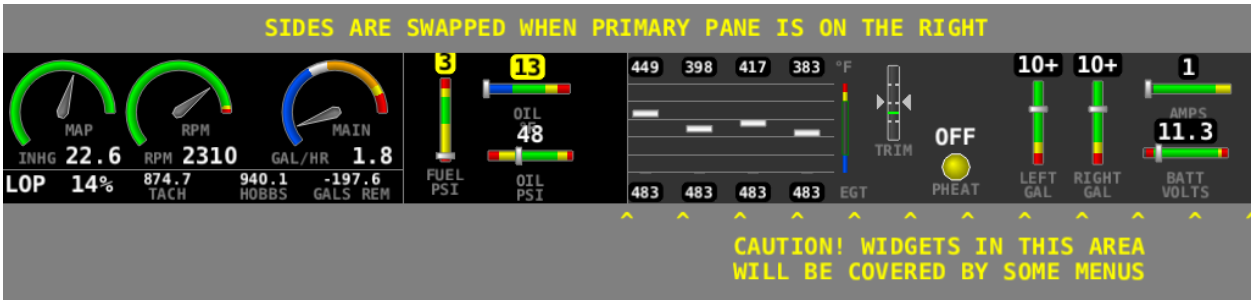

Figure 91 – SkyView HDX EMS BOTTOM BAND Layout

There are two considerations necessary when laying out the engine sensors on the ENGINE BOTTOM BAND:

- Depending on the layout of your SkyView HDX, the layout seen above (dials on the left side, bar graphs on the right side) may be swapped (dials on the right side, bar graphs on the left side).
- The “non-Primary” side (the right side outlined by the note CAUTION! WIDGETS IN THIS AREA WILL BE COVERED BY SOME MENUS) will be temporarily overwritten by some menus, or permanently overwritten when the 50% ENGINE window is displayed.

Thus, you should plan accordingly to display your most vital engine sensors within the “Primary” side of the ENGINE BOTTOM BAND.

8. SV-GPS-250/2020 GPS Receiver Installation and Configuration

SkyView SE supports only one unit, either an SV-GPS-250 or an SV-GPS-2020, as a GPS position source. The installation of a secondary GPS position source is not supported in SkyView SE. Thus, instructions for installation and configuration of a secondary GPS position source in this section are not applicable to a SkyView SE system. If your aircraft requires the use of a secondary GPS position source, SkyView SE is not recommended.

Figure 92 – SV-GPS-250

Figure 93 – SV-GPS-2020

This section explains the installation and configuration of the Dynon Avionics SV-GPS-250 GPS Receiver and SV-GPS-2020 GPS Antenna/Receiver Module (High Integrity GPS). After reading this section, you should be able to determine how to prepare the installation location, mount the unit, connect the unit to a SkyView display(s), and configure it in the SkyView display. Information specific to either the SV-GPS-250, or specific to the SV-GPS-2020 references the individual unit. Information that is applicable to either unit is referenced by "SV-GPS-250/2020".

The SV-GPS-250 was part of the introduction of the SkyView system in December, 2009. From then, through December, 2015, the SV-GPS-250 was the only GPS receiver available from Dynon Avionics. Thus, any aircraft built prior to January, 2016 that has "all Dynon Avionics" panel likely includes an SV-GPS-250. The SV-GPS-2020 was released for sale beginning January, 2016.

As of January, 2016, the intended use for the SV-GPS-250 in a SkyView system is:

- US pilots – secondary GPS receiver (SV-GPS-2020 is primary) *(not supported in SkyView SE)*,
- US pilots – SV-GPS-250 was installed prior to the availability of the SV-GPS-2020 and are waiting until closer to 2020 to retrofit / add an SV-GPS-2020, or
- Non-US pilots whose aviation authorities do not require a high-integrity GPS position source for Mode-S transponder transmission – primary *or* secondary GPS receiver.

The SV-GPS-250 and SV-GPS-2020 are self-contained GPS receivers intended for use with the Dynon Avionics SkyView system and the Advanced Flight Systems (AFS) AF-5000 system. The SV-GPS-2020 provides "high integrity" GPS data to the SkyView system that is required by the FAA 2020 ADS-B Out mandate. *The SV-GPS-250* ***does not*** *provide "high integrity" GPS data to the SkyView system that is required by the FAA 2020 ADS-B Out mandate.* Unlike similar-looking GPS units, the electronics of the GPS receiver are contained within the unit – there is no

separate “electronics module” requiring a coaxial cable connection. The four 22 AWG wires provide power and ground, data to, and data from the unit. The SV-GPS-250 and SV-GPS-2020 are powered by the SkyView display(s) and thus if the SkyView display(s) are equipped with the SV-BAT-320 Backup Battery, the SV-GPS-250 and/or the SV-GPS-2020 can continue to provide GPS data in the event of a failure of the plane’s electrical system.

- If you are a US pilot and equipping your aircraft for the FAA 2020 ADS-B Out mandate, and plan to equip your aircraft with a secondary GPS (see below), the secondary GPS can be either an SV-GPS-250 (including an existing SV-GPS-250) or a second SV-GPS-2020. There is no restriction on equipping a SkyView system with a second SV-GPS-2020. *(A secondary GPS position source is not supported in SkyView SE)*.

Unit	Meets FAA 2020 ADS-B Out mandate? (14 CFR § 91.227)	Data Rate	SkyView Display Refresh Rate	Receives WAAS (where available)?	Intended Use For SkyView
SV-GPS-250	No	38,400 baud	5 Hz	Yes	Secondary GPS receiver
SV-GPS-2020	Yes	115,200 baud	4 Hz	Yes	Primary GPS Receiver

Table 69 – Quick Comparison Chart SV-GPS-250 vs SV-GPS-2020

WAAS Data Reception

Like most modern GPS receivers, the SV-GPS-250 and SV-GPS-2020 include the ability to receive satellite-based Wide Area Augmentation System (WAAS) correction data (when available) to improve positional accuracy. Many pilots confuse a GPS unit that receives WAAS data with a GPS Navigator unit that is certified for flight in Instrument Flight Rules (IFR) conditions. *To be clear, the SV-GPS-250 and SV-GPS-2020, connected to a SkyView system, do receive WAAS data (when available), but having an SV-GPS-250 and/or SV-GPS-2020 (but not an IFR or “certified” GPS) does not mean that your aircraft is properly equipped for legal flight under IFR.*

Only the SV-GPS-2020 or equivalent “high integrity” GPS unit meets the (GPS portion of the) requirements of the FAA 2020 ADS-B Out mandate. If you are equipping your plane for use in the US, compliant with the FAA 2020 ADS-B Out mandate, we recommend that you install the SV-GPS-2020, *not the SV-GPS-250 (except as a secondary GPS).*

Valid GPS data is required for time, compass calibration, moving map functionality, ADS-B IN, and ADS-B OUT, data logging, and other internal functions of the SkyView system. If your plane is already equipped with a GPS unit and it can output GPS data, SkyView can use that GPS data for its operations (other than FAA 2020 ADS-B Out mandate). However, if you decide to do so, be advised that other GPS units typically provide GPS data updates only once per second (1 Hz); this can cause position updates for Synthetic Vision (SynVis) and map position to appear “jerky”. In contrast, the SV-GPS-250 and SV-GPS-2020 provide positional updates much faster – four times per second (4 Hz) for the SV-GPS-2020, and five times per second (5 Hz) for the SV-GPS-250, which provides a superior display for SynVis and map position updates.

Use of the SV-GPS-2020 outside the US

The SV-GPS-2020 is designed to meet the requirements of the (US) FAA 2020 ADS-B Out mandate for Experimental Amateur Built (EAB), Experimental Light Sport Aircraft (E-LSA) and Special Light Sport Aircraft (S-LSA) planes flying in the US. Upon initial release of the SV-GPS-2020 (January, 2016), Dynon Avionics cannot (currently) provide information on the applicability, or requirements, or regulatory issues for the SV-GPS-2020 in any other country. As such information is received, or developed, it will be added to this section in future revisions of this document.

Considerations for converting an SV-GPS-250 to an SV-GPS-2020 in Special Light Sport Aircraft (S-LSAs)

For US pilots, modification of S-LSA aircraft, such as replacing an installed SV-GPS-250 with an SV-GPS-2020, or adding an SV-GPS-2020 to a plane with an SV-GPS-250 already installed, requires specific approval from the manufacturer. This usually entails a Major Repair and Alteration (MRA) authorization from the S-LSA manufacturer. Your S-LSA manufacturer may provide an SV-GPS-2020 kit and instructions to make an SV-GPS-2020 installation easier and faster. Upon initial release of the SV-GPS-2020 (January, 2016), Dynon Avionics cannot (currently) provide information on whether, or not, any S-LSA manufacturer and/or dealer has developed an SV-GPS-2020 kit, has a MRA letter available for installation of the SV-GPS-2020, or has evaluated the SV-GPS-2020 for applicability in their aircraft. Thus, if you are a US S-LSA owner interested in installing the SV-GPS-2020 in place of, or in addition to, an installed SV-GPS-250, your first query should be to your S-LSA manufacturer. As such information is received, or developed, it will be added to this section in future revisions of this document.

Figure 94 is a high-level overview of a suggested SV-GPS-250/2020 installation and configuration procedure.

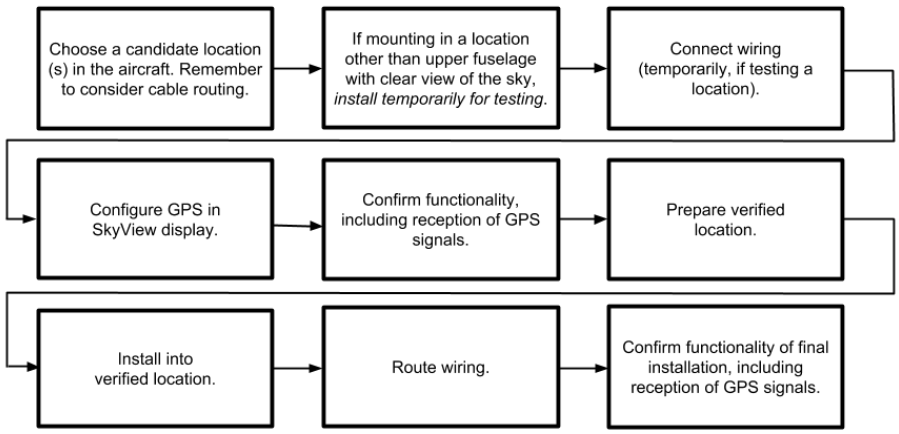

Figure 94 – Suggested SV-GPS-250/2020 Installation and Configuration Procedure

Physical Installation

Like all GPS devices, for most reliable performance, the SV-GPS-250/SV-GPS-2020 require a clear, unobstructed "view" of the sky. The SV-GPS-250/SV-GPS-2020 are designed to be mounted on the upper fuselage of the aircraft for an unobstructed (360° view) of the sky during maneuvers. If the SV-GPS-250/SV-GPS-2020 is mounted inside the fuselage (for example, on the top of the panel or underneath a cowling), the SV-GPS-250/2020's view of the sky is partially or fully obstructed and GPS performance may be marginal in situations such as insufficient number of satellites "in view".

Observe the following guidelines when choosing a location for an SV-GPS-250/2020:

- The optimal location for the SV-GPS-250/2020 is a rigid surface on the upper fuselage of the aircraft.
- Mounting location should be relatively level (the base of the SV-GPS-250/2020 is flat).
- Do not locate the receiver within 3 feet of transmitting antennas.
- Avoid antenna shadows (i.e., obstructions that block the antenna's view of the sky).
- All four of the SV-GPS-250/2020's wires should all be connected to each SkyView system display for redundancy.

The diagram below shows the mounting dimensions of the SV-GPS-250/2020. Note that it utilizes a common bolt pattern found in much of general aviation.

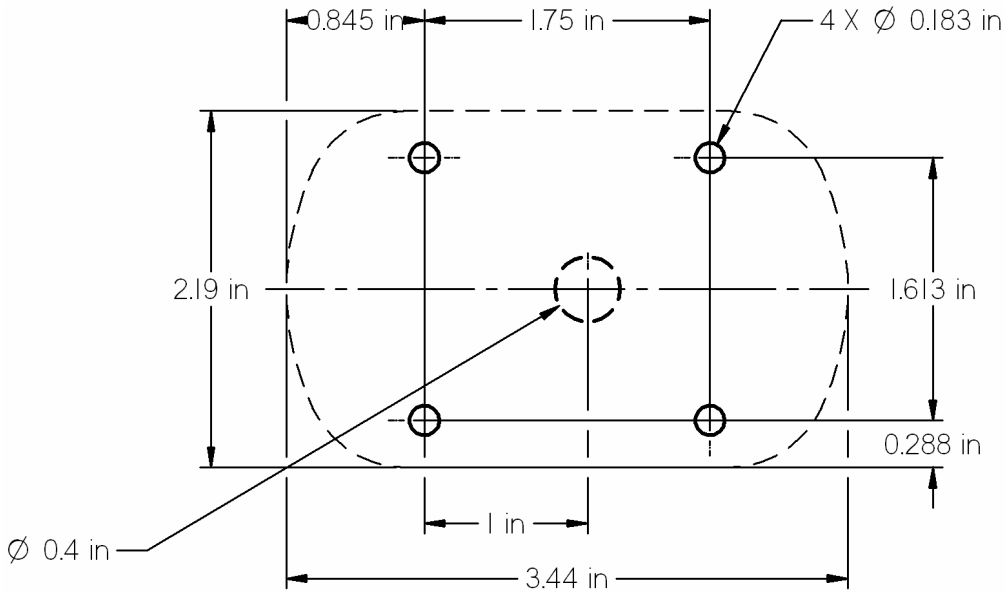

Figure 95 – SV-GPS-250/2020 Mounting Dimensions

Mounting hardware is not included. The SV-GPS-250/2020 is designed to install with #8 fasteners with 100 degree countersunk heads. The use of nut plates is recommended for convenience, but other hardware can be used if space allows. Specific hardware selection is determined by the installer.

We recommend the use of weather sealant around the fastener heads to keep moisture from entering the aircraft through the mounting holes. The module itself is sealed and includes a rubber gasket that seals the inner wire hole. It also allows the module to be mounted on *slightly* curved surfaces. For extra protection, you may use weather sealant around the outside of the SV-GPS-250/2020 where it meets the skin of the aircraft.

Considerations for installing an SV-GPS-2020 in an aircraft with an installed SV-GPS-250

SkyView SE supports only a primary GPS position source. Thus, if you have an SV-GPS-250 currently installed, and plan to install SkyView SE, the SV-GPS-250 must be replaced with an SV-GPS-2020.

Given that the SV-GPS-2020 is physically compatible (same size, same bolt pattern, etc.), and thus *can* be easily installed in place of a previously installed SV-GPS-250, it's understandably tempting to simply "swap" the SV-GPS-2020 in place of an existing SV-GPS-250. However, the high integrity functions of the SV-GPS-2020 *may* require a different (better) installation location than was required by the SV-GPS-250, such as installation on the upper fuselage instead of underneath the cowling or inside a composite fuselage.

*Thus, it is **critical to verify the functionality of the SV-GPS-2020** at the intended installation site on the aircraft prior to final installation.*

This verification should be performed with the aircraft parked in the open with an unobstructed view of the sky, equivalent GPS reception conditions that the SV-GPS-2020 would experience in flight.

For example, if the aircraft is parked near a hangar during the verification, the nearby hangar will artificially "handicap" the SV-GPS-2020's performance by obstructing GPS satellites in the area of the sky blocked by the hangar.

In an aircraft with an installed SV-GPS-250, admittedly the simplest installation method to install an SV-GPS-2020 is:

- Remove the SV-GPS-250
- Cut the wires
- Splice the wiring into the SV-GPS-2020.
  To protect against a corroded connection if there is water leakage around the unit, use a "weathertight" splice method such as solder sleeves or heat-shrink tubing.
- Install the SV-GPS-2020
- Configure and test the SV-GPS-2020

This the most expedient method of installation if you don't wish to, or cannot, run new wiring (such as you can no longer access the portion of the aircraft where the wiring is installed).

However, the SV-GPS-250 is an ideal secondary (backup) GPS unit, thus it's worth considering leaving the SV-GPS-250 installed, and installing the SV-GPS-2020 *in addition to* the SV-GPS-250. If you wish to do so, modify the instructions for a new installation of SV-GPS-250 and SV-GPS-2020:

- Keep the SV-GPS-250 connected to Serial Port 5 (no wiring change required)
- At the SkyView display(s), splice the Orange wire of the SV-GPS-250 to the Orange wire of the SV-GPS-2020.

- At the SkyView display(s), splice the Black wire of the SV-GPS-250 to the Black wire of the SV-GPS-2020.
- Connect the SV-GPS-2020's Gray/Violet (TX) wire to Serial Port 1, 2, 3, or 4 RX wire.
- Connect the SV-GPS-2020's Gray/Orange (RX) wire to Serial Port 1, 2, 3, or 4 TX wire.
- Change configuration of the SV-GPS-250 (Serial Port 5) to POS 2.
- Configure the serial port used for the SV-GPS-2020 to POS 1.

Serial Data Connection

For its primary source of GPS data, SkyView uses the GPS data from the device set to SERIAL IN FUNCTION: POS 1.

If your installation has two or more displays, all four wires of the SV-GPS-250 and/or SV-GPS-2020 must be connected to *all displays*.

The SV-GPS-250/2020 includes 18 feet (5.49 meters) of twisted wire for a serial connection to the SkyView display via the display. This wire may be trimmed or lengthened as needed to suit the installation – the length of these wires is not critical.

The color of the SV-GPS-250/2020 wires matches the colors of the wires of the SV-HARNESS-D37 that are intended for the GPS serial connection. The following table contains information regarding the wires.

Function	SkyView Display Harness SV-GPS-250/2020 Wire Color	SkyView Display D37 Pin
SV-GPS-250/2020 TX	Gray with Violet stripe	11
SkyView display Serial Port 5 RX		
SV-GPS-250/2020 RX	Gray with Orange stripe	12
SkyView display Serial Port 5 TX		
SV-GPS-250/2020 Ground	Black	24
SV-GPS-250/2020 Power	Orange	29

Table 70 – SV-GPS-250/2020 Serial Connection Details

As mentioned previously, if there are two or more displays in your SkyView system, all four of the SV-GPS-250/2020's wires must be connected to all displays in parallel. This wiring scheme is illustrated in Figure 96.

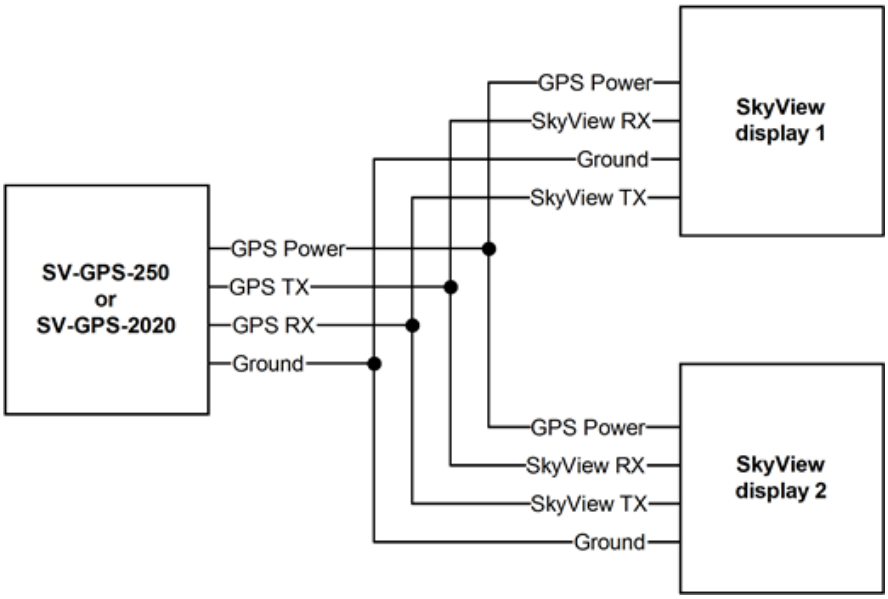

Figure 96 – SV-GPS-250/2020 Connected to Multiple SkyView Displays

If there is more than one SV-GPS-250/2020 in your system (including one SV-GPS-250 and one SV-GPS-2020, use the same scheme in Figure 96 on different display serial ports for the other SV-GPS-250/2020 modules, but connect power and ground for the other SV-GPS-250/2020 modules to the same power and ground connections (black and orange wires) that are provided in the serial port 5 wiring bundle on the display harnesses. An example of this configuration follows.

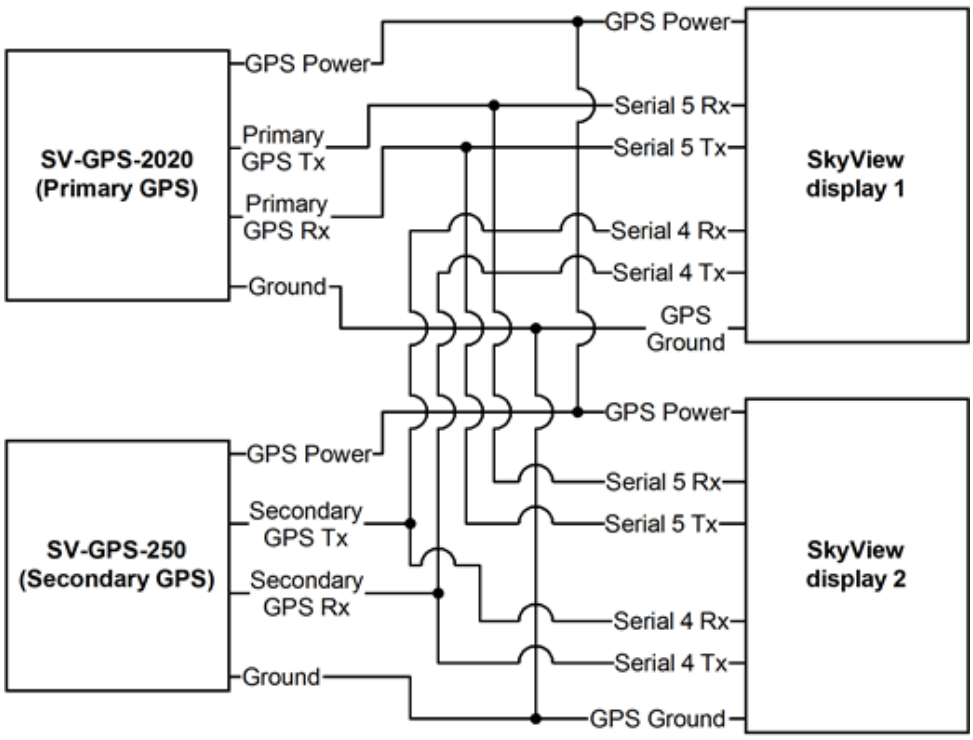

Use of Serial 4 for secondary GPS is for illustration only.
Serial 1, 2, 3, or 4 (if available) may be used for the secondary GPS.

Figure 97 – SV-GPS-2020 and SV-GPS-250 Connected to Multiple Displays (not applicable to SkyView SE)

Secondary GPS Serial Connection Wire Color	Serial Port 1 Wire Color / Pin	Serial Port 2 Wire Color / Pin	Serial Port 3 Wire Color / Pin	Serial Port 4 Wire Color / Pin
Gray/Violet	Brown/Violet (Pin 3 – RX)	Yellow/Violet (Pin 5 – RX)	Green/Violet (Pin 7 – RX)	Blue/Violet (Pin 9 – RX)
Gray/Orange	Brown/Orange (Pin 4 – TX)	Yellow/Orange (Pin 6 – TX)	Green/Orange (Pin 8 – TX)	Blue/Orange (Pin 10 – TX)

Table 71 - Secondary GPS serial connection options

The SV-GPS-2020 is supported in SkyView Software v14.0 or later. Earlier versions of SkyView Software do not support the SV-GPS-2020. To check your Software version, go to SETUP MENU > LOCAL DISPLAY SETUP > DISPLAY HARDWARE INFORMATION.

Configuration – SV-GPS-2020 only, Serial Port 5

Go to the Serial Port Setup Menu (SETUP MENU > SYSTEM SETUP > SERIAL PORT SETUP > SERIAL PORT 5 SETUP) and then configure serial port 5 as follows:

SERIAL IN DEVICE:	DYNON SV-GPS-2020
SERIAL IN FUNCTION:	POS 1
NAVIGATION SOURCE DISPLAY NAME:	(NOT SET)
SERIAL IN/OUT BAUD RATE:	115,200
SERIAL OUT DEVICE:	DYNON SV-GPS-2020

(Highlighted settings are changed automatically from SERIAL IN DEVICE.)

Configuration – SV-GPS-2020 (Serial Port 5) and SV-GPS-250 (Serial Port 4)

The following configuration uses Serial Port 4 for the (secondary) SV-GPS-250 as shown in Figure 97 – SV-GPS-2020 and SV-GPS-250 Connected to Multiple Displays. As explained there, use of Serial Port 4 for the SV-GPS-250 (secondary GPS) is for illustration only. Serial Port 1, 2, 3, or 4 (if available) may be used for the SV-GPS-250 (secondary GPS).

Go to the Serial Port Setup Menu (SETUP MENU > SYSTEM SETUP > SERIAL PORT SETUP

Configure Serial Port 5 as follows:

SERIAL IN DEVICE:	DYNON SV-GPS-2020
SERIAL IN FUNCTION:	POS 1
NAVIGATION SOURCE DISPLAY NAME:	(NOT SET)
SERIAL IN/OUT BAUD RATE:	115,200
SERIAL OUT DEVICE:	DYNON SV-GPS-2020

(Highlighted settings are changed automatically from SERIAL IN DEVICE.)

Configure Serial Port 4 as follows:

SERIAL IN DEVICE:	DYNON SV-GPS-250
SERIAL IN FUNCTION:	POS 2
NAVIGATION SOURCE DISPLAY NAME:	(NOT SET)
SERIAL IN/OUT BAUD RATE:	38,400
SERIAL OUT DEVICE:	NONE

(Highlighted settings are changed automatically from SERIAL IN DEVICE.)

In SkyView Software v14.0 and earlier, when a serial port's SERIAL IN DEVICE is set to DYNON SV-GPS-250 or DYNON SV-GPS-2020 (typically SERIAL PORT 5), the SERIAL OUT DEVICE for that serial port is not "auto-assigned" – it was possible to select a different serial device in SERIAL OUT DEVICE.

In Software versions v14.0 and later, when a serial port's SERIAL IN DEVICE is set to DYNON SV-GPS-2020, SERIAL OUT DEVICE for that serial port is "auto-assigned" to DYNON SV-GPS-2020 respectively. Selection of SV-GPS-250 allows a different SERIAL OUT DEVICE.

Thus, if an SV-GPS-250 is currently installed, for “upgrade protection” do not connect the SV-GPS-250’s serial TX to any device other than the SV-GPS-250. This guidance is reflected in all wiring diagrams for the SV-GPS-250 and SV-GPS-2020.

If (as is possible in Software versions through v14.0) a serial device other than an SV-GPS-2020 was connected to the SV-GPS-2020 serial port TX, that other device will no longer function (communicate), and the SV-GPS-2020 may not function correctly, after updating your SkyView system to Software v14.0.

To correct this situation, reconnect the SkyView display’s serial port TX that is used for the SV-GPS-2020 to the SV-GPS-2020’s Gray/Orange wire.

Updating SV-GPS-2020 Software

To verify and initiate a software update, go to Setup > Local Display Setup > GPS Fix Status. If one or more devices is determined to be out of date, the GPS Fix Status page will display an out of date message below the device identification and display help text directing the installer to enter the GPS fix status page and press the Load button.

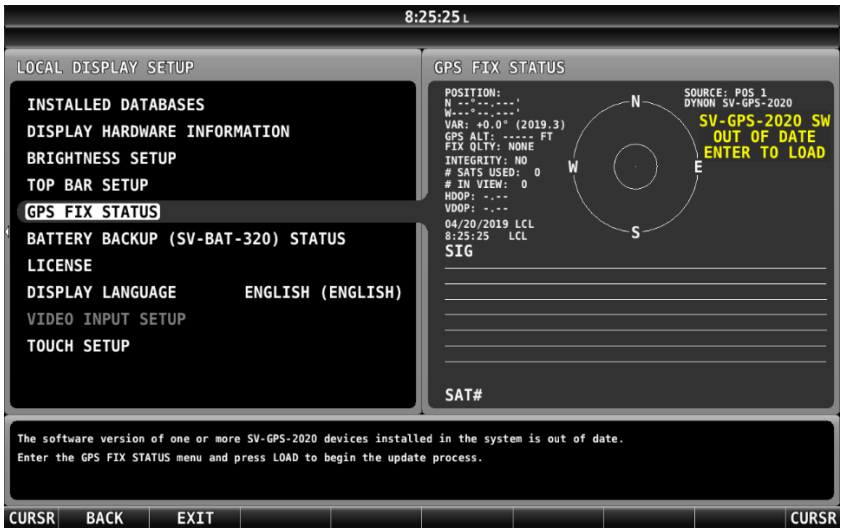

Figure 98 – GPS Fix Status Page

After you enter the GPS fix status page, pressing the Load button takes you to a two-step confirmation page with warnings. Upon pressing continue twice, the load is kicked off on the master display.

It is extremely important that the system is not disturbed during the upgrade. It is recommended that only one display is powered on and that the aircraft is powered by mains power. If another display is turned on or power is lost during the upgrade process, it may result in a corrupted software load rendering the GPS not operational. There is no field recovery method if the GPS software is corrupted.

Depending on how old the device is, the upgrade might be done in two stages. V1.08 or earlier requires an upgrade to v1.10 then an upgrade to v1.11. This is performed automatically. Beyond v1.08 is updated directly to v1.11. The status bar indicates this with a count and total in the title of the dialog box. For example, when upgrading from v1.08 the dialog will indicate 1/2 then 2/2 as it loads the different versions.

The current version of a device can be verified from the RAIM sentence. Setup > System Setup > Serial Port Setup > Serial Port N Setup Navigation Data. Find the data for the RAIM sentence and look at the field labeled Version Number.

Testing / troubleshooting installation of the SV-GPS-250 and/or SV-GPS-2020

The SV-GPS-250 and SV-GPS-2020 are connected to the SkyView system via "serial port", and thus will not appear on the list of SkyView Network Devices during a SkyView Network configuration.

Part 1 – Basic Serial Port Functionality

Go to Serial Port Setup for the serial port you chose to use for the SV-GPS-250 or the SV-GPS-2020 (typically Serial Port 5):
SETUP MENU > SYSTEM SETUP > SERIAL PORT SETUP > SERIAL PORT 5 SETUP

Figure 99 - Serial Port 5 Setup for SV-GPS-2020

On this screen, verify the following:

- SERIAL IN DEVICE matches the device connected – either SV-GPS-250 or SV-GPS-2020; if the incorrect device is selected, no GPS data will be received.
- Verify that SERIAL IN FUNCTION is set to POS 1 for the primary (or only) GPS receiver, or POS 2 for the secondary GPS receiver.
- Verify that RX COUNTER and GOOD SENTENCES are incrementing.
- SENTENCE ERRORS and GROUP ERRORS should not be (significantly) incrementing.

If POS 1 is shown in Red, another GPS device has already been set as POS 1 and that "conflict" must be resolved – only one GPS device can be set as POS 1, only one GPS device can be set as POS 2, etc.

If RX COUNTER and GOOD SENTENCES are not incrementing, check the SV-GPS-250/2020 wiring, specifically that the Gray/Violet and Gray/Orange wires were connected correctly between the unit and the SkyView display. If you have more than one SkyView display, the SV-GPS-250/2020 must be connected to *all* displays.

Part 2 – GPS Receive Performance

To verify that the SV-GPS-250/2020 can receive GPS signals acceptably, move the plane to an open area with a relatively unobstructed view of the sky. Moving the plane just out of a hangar, or between two hangars, where a significant portion of the sky is obscured from the view of the GPS may result in poor performance of the SV-GPS-250/2020.

Go to GPS FIX STATUS to verify that the SV-GPS-250 or SV-GPS-2020 is receiving GPS signals:

SETUP MENU > LOCAL DISPLAY SETUP > GPS FIX STATUS

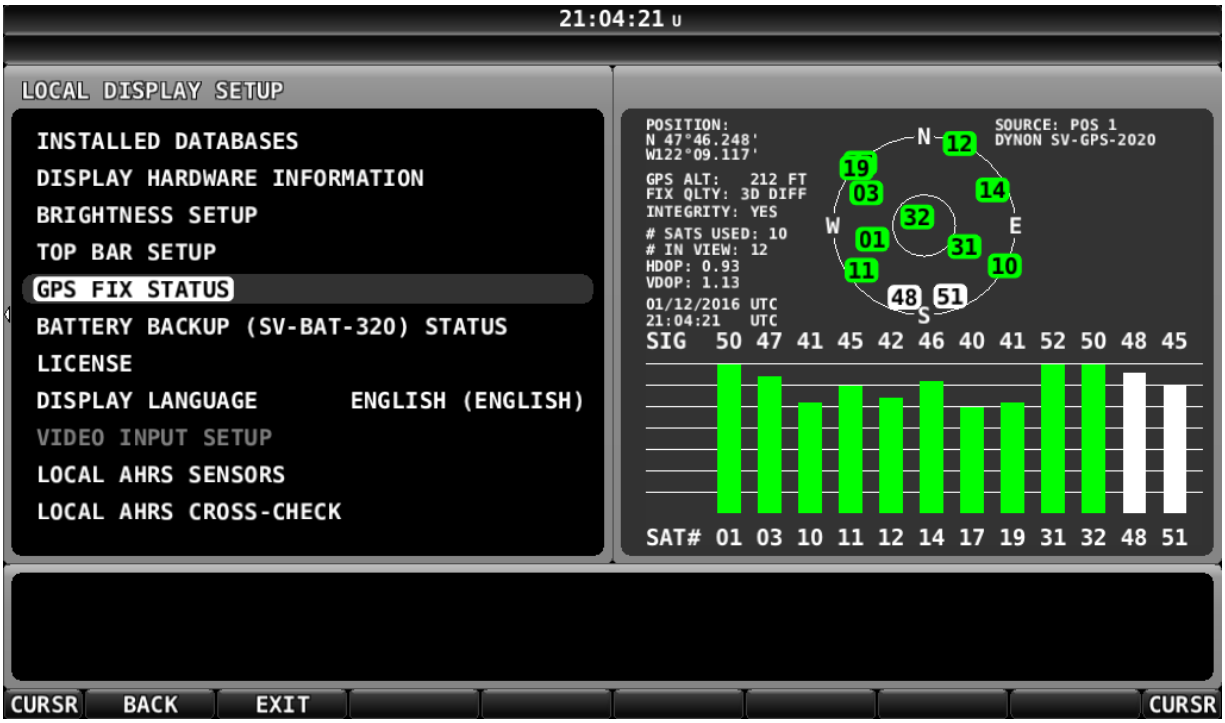

Figure 100 – GPS FIX STATUS – Very Good, 3D DIFF

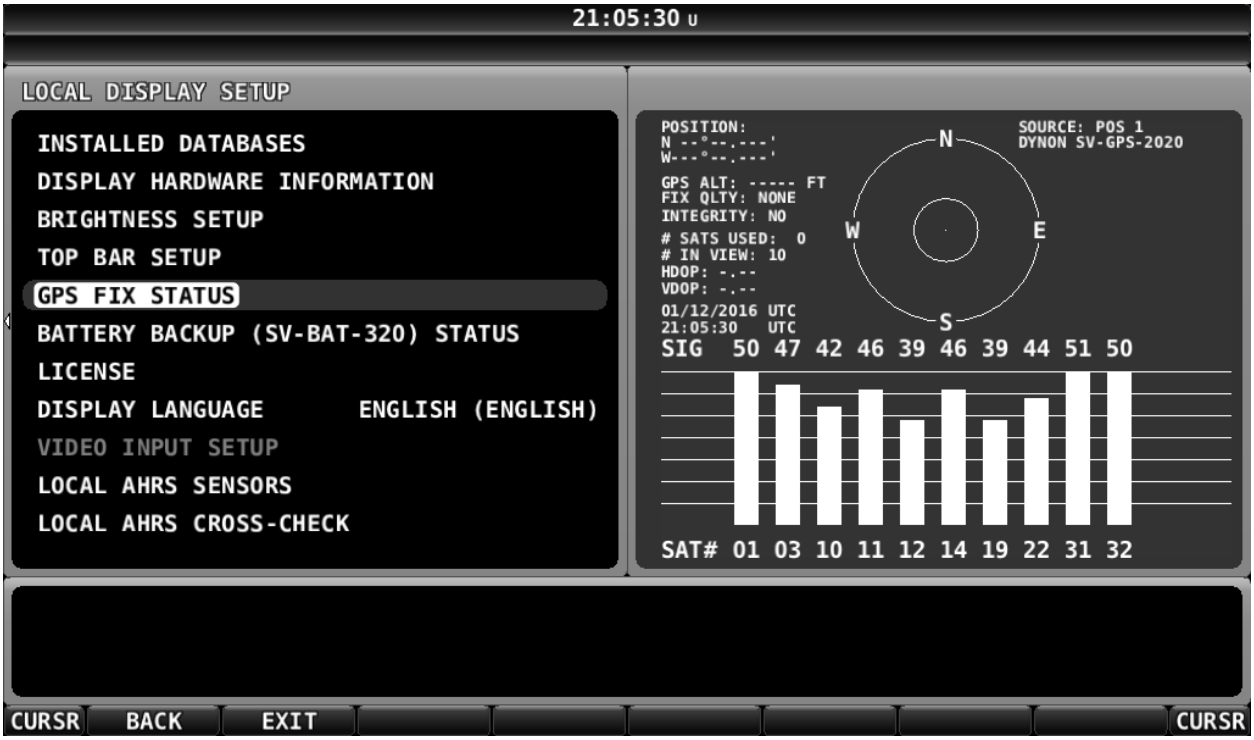

Figure 101 – No GPS Fix

When the SV-GPS-250/2020 is powered up for the first time, or is powered up after several weeks or months of not being used, the SV-GPS-250/2020 may require several minutes to acquire GPS signals.

The number of satellites in "view" of the SV-GPS-250/2020 will vary depending on the time of day, location, etc. Generally, a minimum of six (6) satellites should be shown.

On the GPS FIX STATUS screen, verify the values shown in Table 72 below.

Parameter	Minimum Value
Satellites / Bars shown:	At least 6 satellites displayed in Green
POSITION:	Valid Lat/Long shown
GPS ALT:	Valid altitude shown
Time and Date:	Valid time, date shown
FIX QLTY:	3D (good)
	3D DIFF (very good)
INTEGRITY:	YES (SV-GPS-2020)
	NO (SV-GPS-250)

Table 72 – Verification of SV-GPS-250/2020 Adequate Satellite Reception

See Table 73 – GPS FIX STATUS Satellite Color Explanation (below) for an explanation of the colors.

Bar Color	Details
Green	Received signal strength is *above* the desired threshold, this satellite *is* used in the position solution.
Yellow	Received signal strength is *below* the desired threshold, this satellite *is* used in the position solution.
White	This satellite is in view, but is not used in the position solution.

Table 73 – GPS FIX STATUS Satellite Color Explanation

Note that GPS FIX STATUS only displays information for the GPS that is set to POS 1. If you have a second GPS installed, temporarily set that unit to POS 1 and temporarily set the primary GPS to POS 2.

If, after waiting several minutes, any of the Minimum Values shown in Table 72 – Verification of SV-GPS-250/2020 Adequate Satellite Reception *are not shown* (such as illustrated in Figure 101 above) it may be necessary to install the SV-GPS-250/2020 in a different location on the aircraft.

(US only) Additional configuration required for SDA/SIL=1…

… required for continued reception of ADS-B Traffic (early 2016)

The following is only applicable to US pilots whose aircraft is equipped with an SV-GPS-250 (but not an SV-GPS-2020), SV-XPNDR-261/262 (or other Mode-S / ES transponder), and SV-ADSB-470/472/472 (ADS-B In receiver).

Prior to 2016, the FAA transmitted TIS-B to aircraft in US airspace who transmit SIL/SDA=0 (GPS integrity), allowing those aircraft to receive targeted "ADS-B Traffic" specific to their aircraft. In early 2016, the FAA will discontinue transmitting TIS-B to aircraft in US airspace who transmit SIL/SDA=0.

Prior to SkyView Software v14.0, SkyView systems equipped with an SV-GPS-250 transmit *only* SIL/SDA=0. In SkyView Software v14.0 and later, SkyView can be configured to transmit SIL/SDA=1 or SIL/SDA=0. When set to SIL/SDA=1, this allows aircraft in US airspace equipped with an SV-GPS-250 to continue to receive TIS-B / ADS-B Traffic through December 31, 2019. If you are a US pilot and have an SV-GPS-250 (but not an SV-GPS-2020) on your aircraft, information on configuring your SkyView system for SIL/SDA=1 is found in SV-XPNDR-261/262 Installation and Configuration.

Additional Configuration Required for Compliance with FAA 2020 ADS-B Out Mandate

This section (above) deals with installation and configuration of the SV-GPS-250 and SV-GPS-2020 *only*. However, installing the SV-GPS-2020 is only part of what is required to be compliant with the FAA 2020 ADS-B Out mandate. Specifically, next steps include:

- Update your SkyView system to Software v14.0 (or later).
- Ensure that your SV-XPNDR-261 has Software SW02.08 (or later), update your SV-XPNDR-261 if required.
- Change the SV-XPNDR-261's source of GPS data to the SV-GPS-2020.

For the details on the transponder changes, and explanation of overall compliance with the FAA 2020 ADS-B Out mandate, see the SV-XPNDR-261/262 Installation and Configuration section.

9. SV-BAT-320 Backup Battery Installation

Figure 102 – SV-BAT-320 Backup Battery

This section contains information that specifically applies to the installation of the SV-BAT-320 Backup Battery. After reading this section, you should be able to determine how to prepare the installation location, mount the module, connect it to a display, monitor its voltage, and ensure it is charged.

SkyView displays are designed to work only with the SV-BAT-320 as a backup battery in case of loss of aircraft power. Connecting any device other than the SV-BAT-320 to SkyView display Pin 2(+) and Pin 23 (-) will void any warranties and is a significant safety hazard.

Do not extend the SV-HARNESS-D37's cable that connects to the SV-BAT-320.

An SV-BAT-320 can only power one SkyView display. *Do not modify the cable to the SV-BAT-320 to attempt to power more than one SkyView display from one SV-BAT-320.*

A SkyView display can only be powered by, and charge, one SV-BAT-320. *Do not modify the cable to the SV-BAT-320 to attempt to connect more than one SV-BAT-320 to a SkyView display.*

The SV-BAT-320 is a Lithium-Ion (Li-Ion) battery such as is used in mobile phones, laptops, and tablet computers. It is designed to power a SkyView display, and devices powered by the SkyView display for at least 60 minutes if aircraft power is lost.

Figure 103 is a high-level overview of a suggested SV-BAT-320 installation, configuration, and maintenance procedure.

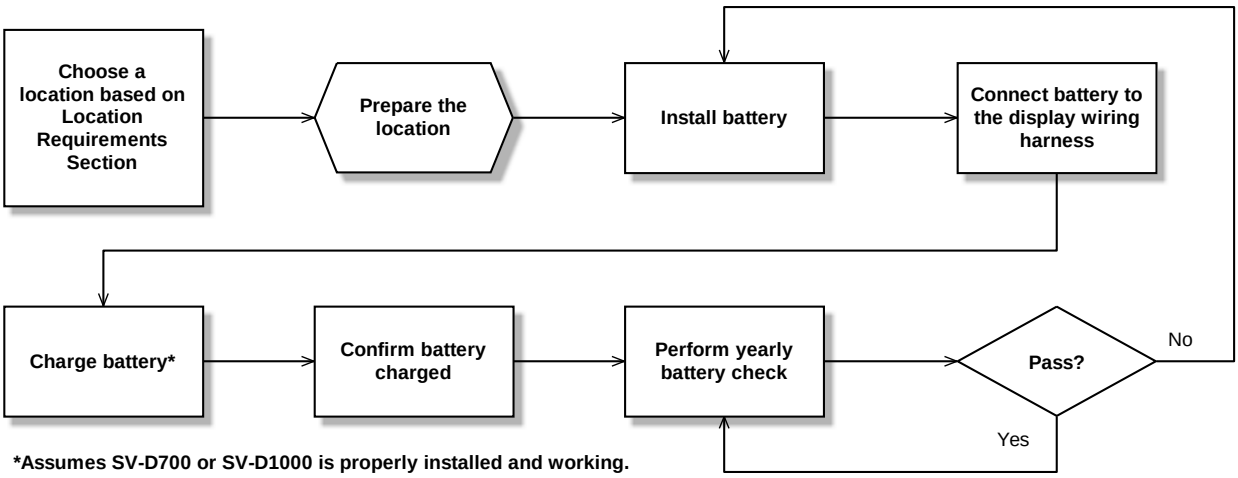

Figure 103 – Suggested SV-BAT-320 Installation, Configuration, and Maintenance Procedure

Physical Installation

The diagram below shows the mounting dimensions of the SV-BAT-320.

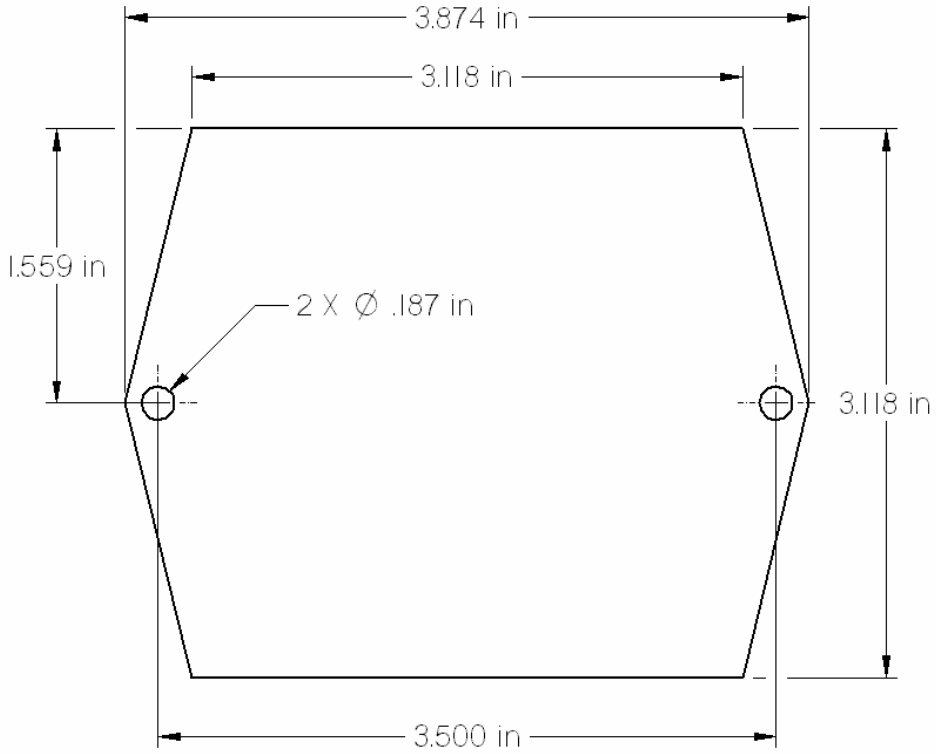

Figure 104 – SV-BAT-320 Mounting Dimensions

SV-BAT-320 Location

Observe the following guidelines when choosing a location for an SV-BAT-320:

- Location should be near the rear of the SkyView display. A 24” cable is included on the SV-HARNESS-D37 for connecting the SV-BAT-320. *This cable should not be extended.*
- Avoid locations that are subject to severe vibration.
- Avoid locations that are subject to extended temperature ranges. *The SV-BAT-320 has a narrower operating temperature range than other SkyView modules.*
- Avoid locations that are subject to extreme humidity.
- Leave room for electrical connections.

Mounting hardware is not included with the SV-BAT-320. The mounting tabs on each side of the module have holes sized for #8 fasteners. Button head style AN hardware is recommended as spacing between the holes in the tabs and the body of the enclosure limits what style tool can be used to tighten certain fasteners. Follow recommended torque practices when tightening the mounting hardware (see Caution below).

The SV-BAT-320 enclosure is made of plastic that may crack if too much torque is applied to the fasteners and the mounting tabs of the SV-BAT-320. The appropriate amount of torque that should be applied is a combination of the mounting base material, its thickness, the fastener, the presence or absence of thread lock compound on the fastener, and the tolerance stack up of the diameters of the mounting hole and the fastener. Apply sufficient torque that the fasteners will not self-release, but not so much that the mounting tabs will eventually break from too much stress.

Use of ferrous fasteners in this location is acceptable. *Do not rivet the SV-BAT-320 to the aircraft as this will hinder future removal if necessary.*

Electrical Connection

For warranty replacement, an SV-BAT-320 that is received at Dynon Avionics with a different connector than the factory-installed connector is not eligible for warranty replacement.

Connect the SV-BAT-320 module’s connector to the mating connector on the SV-HARNESS-D37.

If you are constructing your own SkyView display harness (equivalent to the Dynon Avionics SV-HARNESS-D37), do not cut off the connector on the SV-BAT-320 to install a different connector. See Appendix C: Wiring and Electrical Connections, Non-Dynon Avionics Wire Harness Considerations for details on the mating connector for the SV-BAT-320.

Charging the SV-BAT-320

Do not attempt to charge the SV-BAT-320 using any other charging unit. Doing so, at a minimum, risks ruining the SV-BAT-320, and at worst may cause the battery to explode. The only safe method of charging an SV-BAT-320 is to connect it to a SkyView display.

SV-BAT-320 is Automatically Charged in Flight

An SV-BAT-320 connected to a SkyView display is automatically charged by the SkyView display when there is adequate power applied to the SkyView display. If the SV-BAT-320 becomes discharged, on the next flight the SkyView display will automatically charge the SV-BAT-320. Charging, when necessary, required a minimum input voltage of 12.25 Volts supplied to the SkyView display. To prevent discharging the aircraft battery excessively (when not in flight), the SkyView display will not attempt to charge the SV-BAT-320 when the input voltage to the SkyView display is lower than 12.25 volts.

Charging the SV-BAT-320 on Ground or During Aircraft Construction

As with all new lithium-ion batteries, the SV-BAT-320 is manufactured, stored in inventory (Dynon Avionics, dealers, and aircraft manufacturers), and shipped in a *partially-charged state*. Occasionally, typically after a year or more with no charging, the SV-BAT-320 may appear to be fully discharged – the SkyView display may not be able to detect that a battery is installed.

To prevent becoming totally discharged, all lithium-ion batteries, including the SV-BAT-320, incorporate internal safety circuitry (protection mode) that will disconnect the load (SkyView display) when the lithium-ion battery's state of charge is very low.

Prior to Software v15.0, SkyView displays could not detect when an SV-BAT-320 was in this state (protection mode due to low state of charge) and thus the SkyView display would not attempt to charge the SV-BAT-320. Software v15.0 and later incorporates an improvement to the charging algorithm; the SkyView display is able to detect this state and charge an SV-BAT-320 that is in protection mode.

As explained above, to prevent discharging the aircraft battery excessively (when not in flight), the SkyView display will not attempt to charge the SV-BAT-320 when the input voltage is lower than 12.25 volts. During aircraft construction, or if the aircraft will not be flown for an extended period, the SkyView display can charge the SV-BAT-320 if the following conditions are met:

- For each SkyView display that will be charging an SV-BAT-320, the aircraft's battery charger must be able to supply at least 5 amps (5A) (for a 12 volt electrical system; 2.5A for a 24 volt electrical system). If you have two SkyView displays with SV-BAT-320s, and you wish to charge them simultaneously, the battery charger must be capable of supplying 10A.
- Under full load (5A), the aircraft battery charger must be capable of supplying 13 volts (13V) to the SkyView display. Supplying 13V to the aircraft electrical system allows for voltage drops in the electrical system, ensuring that the SkyView display receives at least 12.25V that is required to charge an SV-BAT-320.
- It may take as long as four hours (4H) to fully charge a fully discharged SV-BAT-320.
- To charge an SV-BAT-320, the SkyView display must be powered ON and fully booted up. The SkyView Software monitors the charging process; if the SkyView display is powered off, the SV-BAT-320 will not be charged.

Battery Status Icon

Battery status icon is individual to each display in a SkyView system. One of two icons, or no icon will be displayed immediately to the left of the clock in the center of the top bar.

No battery icon displayed

- No battery has ever been connected to this display or battery status is normal. If a battery is connected, all of the following are true:
  - An Initial SV-BAT-320 Test has been performed.
  - The Annual SV-BAT-320 Test is not yet due.
  - The last three automatic SV-BAT-320 self-checks were normal. SV-BAT-320 self-checks are performed automatically every time master power is removed on the ground (after a flight, for example) while the 30-second “power lost” timer is counting down.

Needs Test Icon

- SkyView has determined that the SV-BAT-320 should be tested using the manually-actuated SV-BAT-320 Test. This is because:
  - It has been one year since the last battery test. See the Detailed Battery Status Check section below for details about the nature of the anomaly.
  - The 30 second automatic battery self-check that is performed when master power is removed during a normal shutdown did not complete properly at least 3 consecutive times.

Fault/Test Failed Icon

- A fault has been detected because of one of the following conditions:
  - The battery is no longer connected.
  - A battery test has failed. See the following sections for more information.

Detailed Battery Status Check

Enter the Display Hardware Information Page (SETUP MENU > LOCAL DISPLAY SETUP > BATTERY BACKUP (SV-BAT-320) STATUS to check the status of the battery.

- BATTERY CONNECTED (BATTERY DETECTED): YES / NO
  - SkyView automatically sets this to yes when a battery is installed.
- LAST BATTERY SHUTDOWN:
  - NORMAL
  - ABNORMAL: The last shutdown of SkyView did not happen normally.
  - WEAK BATTERY: SkyView detected a low battery voltage condition when SkyView was last shut down. The battery may be discharged or may need replacement. SkyView will annunciate a warning if this happens repeatedly.

- DATE OF LAST TEST: UNTESTED / MM-DD-YYYY
  - If this date is over a year ago, SkyView will annunciate BATTERY TEST NEEDED upon startup. Follow the steps in Initial SV-BAT-320 Test below.
- TEST RESULT:
  - FAIL: VOLTAGE DROP TOO HIGH: Battery likely needs to be replaced. Contact Dynon Avionics Technical Support (contact information at the beginning of this manual).
  - FAIL: LASTED xx MINS: Battery likely needs to be replaced. Contact Dynon Avionics Technical Support (contact information at the beginning of this manual).
  - PASS BATT LIFE > 45 MIN: The last full test of battery passed
- BATTERY STATUS: (voltage)
- CHARGE STATUS: CHARGING/DISCHARGED/CHARGED/STANDBY/NO BATTERY

An SV-BAT-320 is fully charged when it reaches 12.25 volts. Charging a completely discharged battery may take up to 4 hours. To conserve your aircraft battery, the SV-BAT-320 only charges when SkyView detects that your alternator or generator is running (whenever your engine is running), which is when SkyView's input voltage is above 12.25V. Alternatively, connecting a battery charger to your aircraft battery will also raise the input voltage to a level that will allow SkyView's SV-BAT-320 to charge.

The SV-BAT-320 must only be charged by SkyView. External charging of the battery is not supported. External charging of the battery can damage it or cause it to explode.

Initial SV-BAT-320 Test

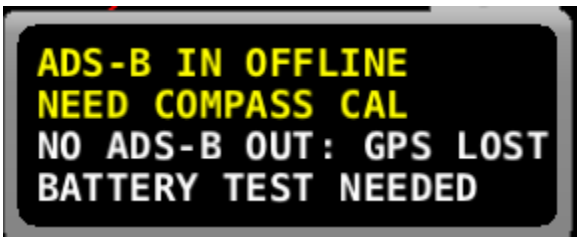

Figure 105 – BATTERY TEST NEEDED Message

The Initial SV-BAT-320 Test is performed to ensure that a SV-BAT-320 is fully functional after installation is complete. SkyView records the date of the last battery test (if any) and will annunciate, via a message and an icon in the top bar, when an initial, or annual battery test is required. For instructions on performing the *annual* SV-BAT-320 test, see Appendix A: Maintenance and Troubleshooting, Instructions for Continued Airworthiness, Annual SV-BAT-320 Test.

An SV-BAT-320 is designed to (when fully charged) power a SkyView display and devices powered by a SkyView display (see System Planning, Power for details), for at least 60 minutes if aircraft power is lost. The Initial SV-BAT-320 Test ensures that an SV-BAT-320 has adequate capacity by discharging it while recording the time elapsed.

If your SkyView system has more than one SkyView display with an SV-BAT-320 installed, perform the following test individually on each SkyView display / SV-BAT-320.

Test Procedure

1. The SV-BAT-320 must be fully charged prior to commencing this test. Reference the section Charging the SV-BAT-320 above for information on charging the SV-BAT-320.
2. Apply power to the SkyView display you will be testing. If all of your SkyView displays power up from a single switch or circuit breaker, power down any display other than the unit on which you will perform the SV-BAT-320 test – push and hold Button 1 (HOLD TO POWER DOWN).
3. Remove power to the SkyView display you will be testing. If all of your SkyView displays power up (and power down) from a single switch or circuit breaker, push the POWER OFF button on the SkyView display(s) that are not being tested. That SkyView display will be powered off.
4. On the SkyView display that is being tested, during the 30 second power off countdown, press the TEST BAT button above button 8 (far right button) – see Figure 106 below.

Figure 106 – TEST BAT Button Appears After Removing Power to SkyView Display

5. The BATTERY TEST screen will appear displaying the status of the test. If the SV-BAT-320 is able to power the system for at least 45 minutes, the SV-BAT-320 passes this test.
6. After the test completes (successfully, or unsuccessfully), the SkyView display will automatically power off.
7. To see the results of the test, enter the SETUP MENU > LOCAL DISPLAY SETUP > BATTERY BACKUP (SV-BAT-320) STATUS>TEST RESULTS. Make sure the TEST RESULT says PASS.
8. The BATTERY TEST can be aborted by pressing the PWR OFF button.

Repeat the test procedure for each SkyView display that has an SV-BAT-320 installed.

This test discharges the SV-BAT-320. Recharging the SV-BAT-320 after the test is recommended, either by flying for approximately four hours, or using the procedure above to charge the SV-BAT-320 on the ground.

In the Event of Initial SV-BAT-320 Test Failure …

See http://dynonavionics.com/docs/support_returns.html for the most current information on Dynon Avionics warranty terms and conditions.

Note that if an SV-BAT-320 is replaced under warranty, the defective SV-BAT-320 must be returned (at customer's expense) to Dynon Avionics to avoid being charged full purchase price of a new SV-BAT-320.

If a new SV-BAT-320 does not pass the Initial SV-BAT-320 Test, contact Dynon Avionics Technical Support (contact information at the beginning of this manual) for further assistance.

Please have the S/N of the SV-BAT-320 (printed on the SV-BAT-320 product label) available when you call. Note that warranty terms and conditions apply to a new SV-BAT-320.

SV-BAT-320 Specifications

Specifications for the SV-BAT-320 can be found in Appendix B: Specifications, SV-BAT-320 Specifications.

Returning an SV-BAT-320 to Dynon Avionics for Exchange (Warranty Replacement)

If it is necessary to return an SV-BAT-320 to Dynon Avionics for warranty replacement, consult with your shipping company, in your country, *in advance of shipment* regarding the regulations to ship a Lithium-Ion battery such as the SV-BAT-320. Regulations to ship a Lithium-Ion battery *vary widely, depending on the shipping company, country, type of shipping (air, ship, ground, etc.)*, thus Dynon Avionics cannot offer definitive advice on shipping an SV-BAT-320, only this general guidance:

> *All packages containing lithium batteries are classified as Class 9 — Miscellaneous Dangerous Goods. However, packages containing small amounts of lithium may be exempted from most of the IATA and ICAO requirements if they comply with the requirements in Section II IATA (which matches Section II ICAO) Packing Instructions (PI) 965, 966, and 967 for lithium ion batteries and 968, 969 and 970 for lithium metal batteries as appropriate.*
>
> *For purposes of shipping, Lithium-Ion batteries manufactured for Dynon Avionics are deemed to contain minimal lithium, below thresholds that require special arrangements.*

To support returning an SV-BAT-320 to Dynon Avionics for warranty replacement, a Material Safety Data Sheet (MSDS) for the SV-BAT-320 is available upon request – contact Dynon Avionics Technical Support (contact information at the beginning of this manual).

A package containing a Lithium-Ion battery is sometimes required to be labeled as such. Figure 107 below is an example of such a label.

Figure 107 – Example Lithium-Ion Battery Shipping Label

10. AP Servo Installation, Configuration, and Calibration

Figure 108 – SV42 Servo (other servos are similar)

This section contains generic mechanical and electrical installation guidelines for the Dynon Avionics servos mentioned in Table 74. Plane-specific kits purchased from Dynon Avionics contain detailed drawings and diagrams which are intended to be used in conjunction with this guide as a complete set of installation instructions. A complete list of aircraft mounting kits is available on the current Price List/Order Form at http://store.dynonavionics.com. Drawings and diagrams are also available at http://docs.dynonavionics.com.

Figure 109 is a high-level overview of a suggested servo installation, configuration, and calibration procedure.

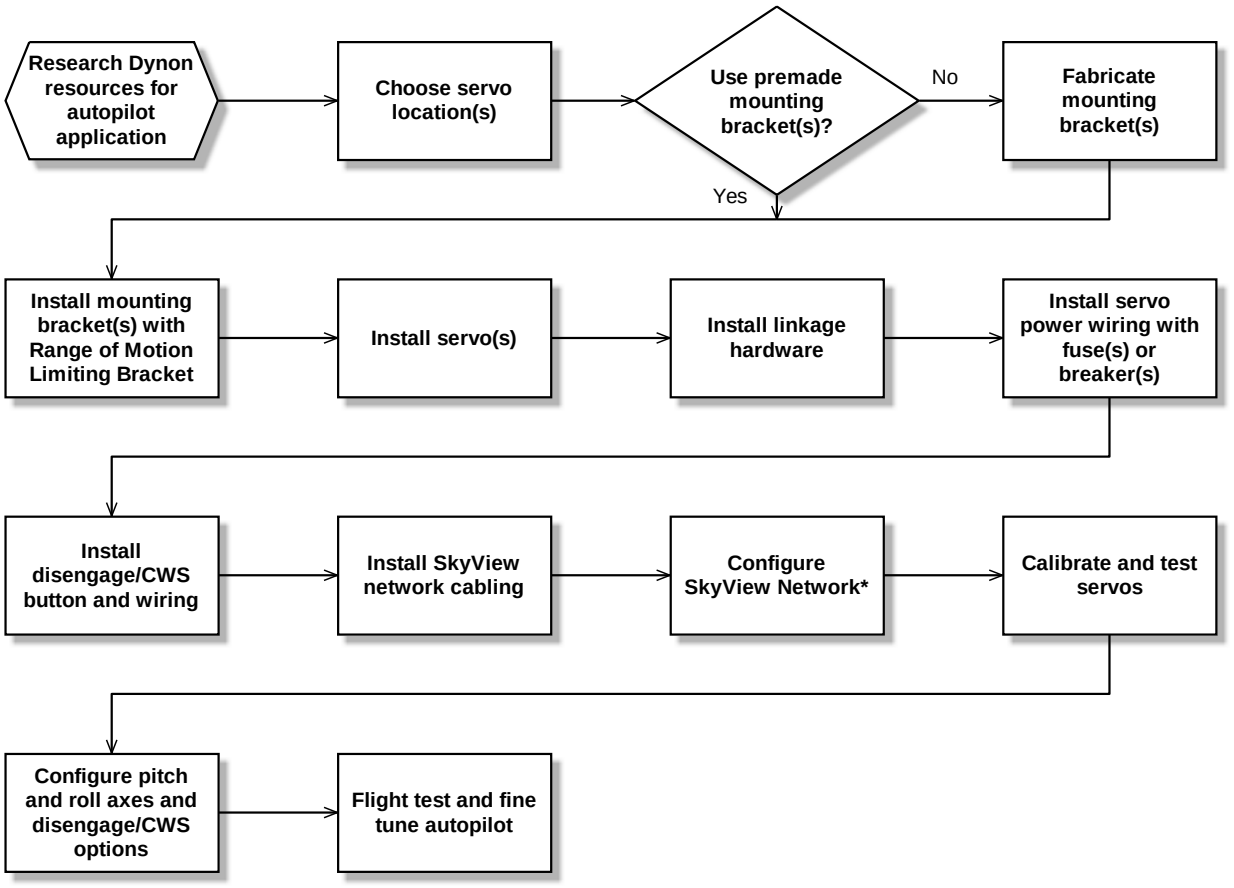

***Assumes SV-D700 or SV-D1000 is properly installed and working.**

Figure 109 – Suggested Servo Installation, Configuration, and Calibration Procedure

Of note to SkyView pilots that are either upgrading their D10A/D100 series products to SkyView: Autopilot servos shipped prior to December 1st, 2009, require that they be upgraded to Version 5.2 Software or higher before they can connect to a SkyView Network. Autopilot servos shipped prior to this date MUST be upgraded to the latest version using a D10/D100 Series product BEFORE they are connected to SkyView. This will then allow the SkyView Network to communicate with the servo. If you no longer have this capability, contact Dynon Avionics Technical Support (contact information at the beginning of this manual). Your servos can be returned to Dynon Avionics for a Software update.

Dynon Avionics Autopilot Servo Models

Dynon Avionics offers the following servo models:

Model Number	Torque	Attachment
SV32	36 inch-pounds	Standard Arm
SV32C		Capstan
SV32L		Long Arm
SV42	55 inch-pounds	Standard Arm
SV42C		Capstan
SV42EL		Extra Long Arm
SV42L*		Long Arm
SV42T *		Torque Enhancement
SV52	72 inch-pounds	Standard Arm
SV52C		Capstan
SV52L*		Long Arm

Table 74 – Dynon Avionics Servos

* SV42L, SV42T, and SV52L servos are special order items – contact Dynon Avionics for details.

Compass Calibration Requirement

The SkyView autopilot requires an accurate compass to operate efficiently and comfortably in heading mode and the radio-based VOR/NAV mode. Therefore, it is critical that the ADAHRS be installed correctly, calibrated, and operating well in all attitudes.

Additional Resources

Dynon Avionics' Internet sites provide frequently updated information on installation and operation issues:

Dynon Avionics' Online Customer Forum – http://forum.dynonavionics.com – is a resource for Dynon Avionics SkyView pilots to discuss installation and operation issues relating to Dynon

Avionics products. The Forum is especially useful for pilots with uncommon aircraft or unusual installation issues. For SkyView pilots that cannot call Dynon Avionics Technical Support during our normal business hours, the Forum is a convenient way to interact with Dynon Avionics Technical Support. The Forum allows online sharing of wiring diagrams, photos, and other types of electronic files.

Dynon Avionics will continue to develop kits and installation instructions for more aircraft based on demand. It is also expected that aircraft manufacturers will develop their own mounting kits for Dynon Avionics servos or offer the Dynon Avionics AP as a factory option.

Servo Mechanical Installation

Observe the following guidelines when choosing a location for servos:

- The location must allow the servo arm and associated linkage to move freely through the entire range of travel.
- Do not allow the servo arm to travel more than ±60° from neutral throughout the control system's range of travel. *Note that this requirement only applies to arm servos and not capstan servos.*
- Leave room for all mounting hardware, including brackets, fasteners, linkages, etc.
- Leave room for electrical connections.

Dynon Avionics has researched suitable mounting points for a number of popular aircraft and offers mounting kits and instructions for them. If you have purchased one of these kits, use the instructions included with it as your primary guide; the following mechanical installation information is more general in nature. If you have purchased cable-drive capstan servos (SV32C or SV42C), refer to the documentation that came with the included Capstan Accessory Kit (101116-000).

For installing Dynon Avionics servos in aircraft for which Dynon Avionics does not offer kits, we offer a Generic Servo Installation Kit (101020-000) of basic parts and basic installation instructions. The generic servo push-pull mounting kit includes some of the hardware to mount a servo and connect to the aircraft controls, but requires the installer to fabricate mounting brackets. This kit can be used in either pitch or roll applications that use a servo with an output arm (not suitable for use with pulley/cable servos). Some additional fasteners (not supplied by Dynon Avionics) and brackets will be required depending on the installation method chosen.

Neglecting to properly install and/or use Dynon Avionics AP hardware can result in failures which could cause loss of aircraft control resulting in aircraft damage, personal injury, or death. If there are any questions on the part of the installer it is mandatory to resolve these questions prior to flight.

When installing the servo, you must first determine a mount location for proper interaction with the existing control system. The mounting point that is chosen must allow the servo arm and associated linkage to move freely through the entire range of travel. To prevent the possibility of the servo arm going OVER CENTER, the servo arm must not travel more than a

total of +/-60° from neutral position. When the aircraft controls are centered, the arm of the servo should be perpendicular to the attaching push rod. If this is not the case, we recommend adjusting the length of the push rod or consider a different mounting point. For maximum efficiency and the lightest drag on the flight controls, you should choose the smallest servo that provides sufficient torque to move and hold the flight controls with a minimum of slippage. A diagram of servo torque versus mount position is shown on page 10-7.

The servo arm must not rotate even near to the point called OVER CENTER, the point at which the primary aircraft control would "lock up". Over center happens when the angle between the servo arm and the attached push rod becomes so great that the control system cannot drive against the servo arm. To protect against this possibility, a Range of Motion Limiting Bracket is supplied with each Dynon Avionics servo. These brackets are drilled so that they can be mounted at different angles as required (18° intervals). The brackets are supplied for the protection of the pilot, and we recommend that the Range of Motion Limiting Bracket be installed to ensure that an OVER CENTER condition cannot occur. *During normal servo operation, the Range of Motion Limiting Bracket should never be used. It is only intended for use as a safety mechanism in the SkyView Autopilot system.* When installing the Range of Motion Limiting Bracket, only use the supplied screws. Using longer screws to install the bracket, you will penetrate and damage the electronics.

Once a suitable mounting point for each servo has been determined, the next step is to fabricate a mount for the servo to attach to the aircraft. Generally, this will be a bracket made of sheet metal or corner stock. Dynon Avionics recommends using 6061 T6 aluminum with a minimum thickness of 0.050" for the best balance of strength to weight. When fabricating a mounting bracket, refer to the servo dimensions below. Be sure to leave ample room for the arm and attached linkage to move through a complete range of motion without interference.

In normal operation, autopilot servos can reach temperatures that can be very uncomfortable to, and perhaps cause burns to unprotected skin. Thus, servos should be mounted in an area, or in such a manner to prevent accidental skin contact. If mounting the servo in an exposed area *is* necessary, a shroud should be installed (that doesn't restrict ventilation) that protects against accidental skin contact with the servos.

Push-Pull Servo Dimensions

Use the following dimensions (in inches) for reference when planning and implementing your installation.

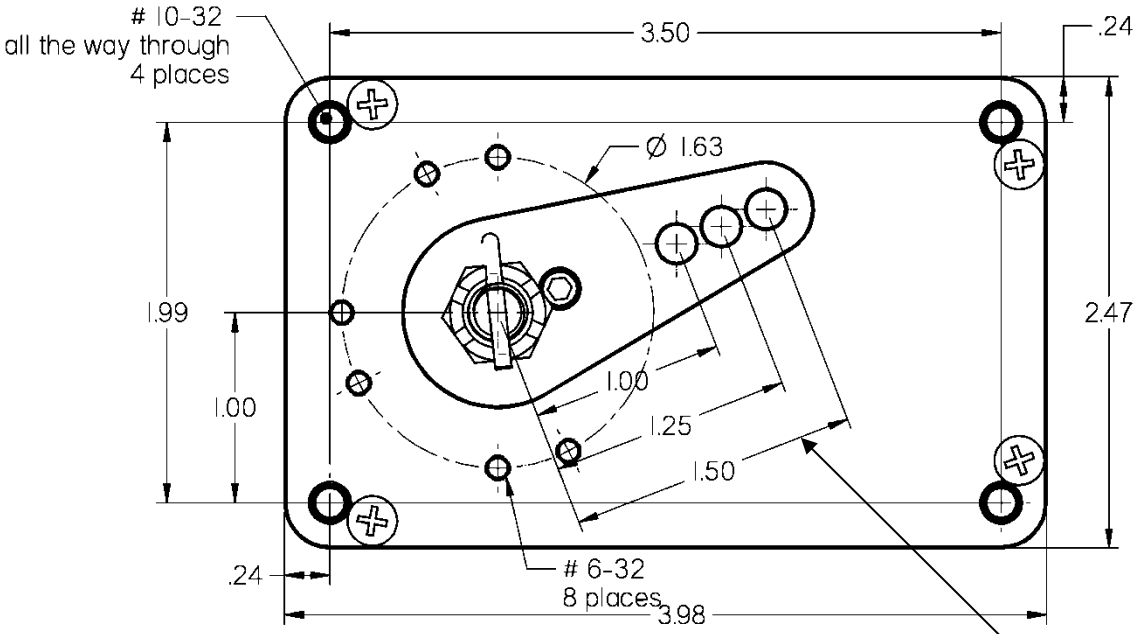

Figure 110 – Servo Top Down Dimensions – See Note Below Regarding Arm Length

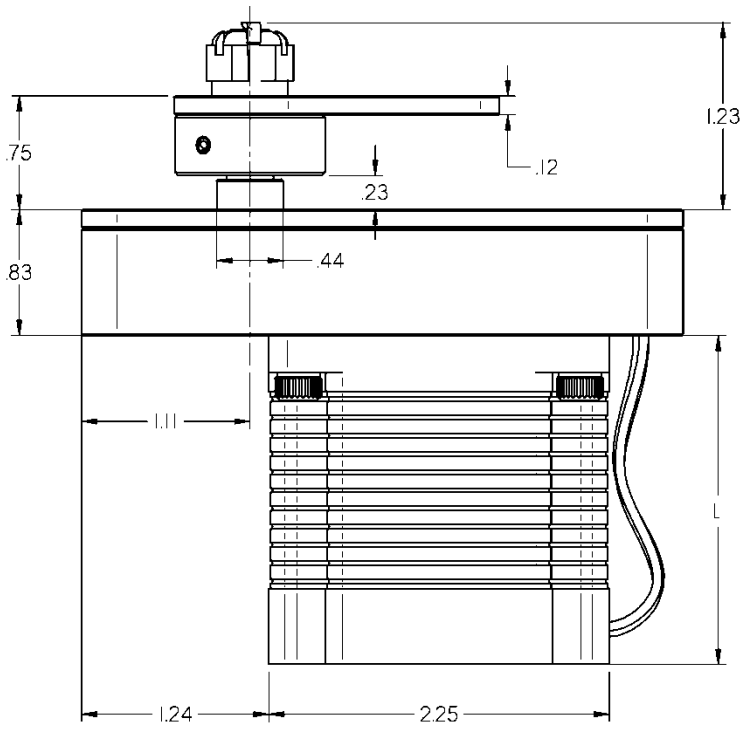

Figure 112 – Servo Side Dimensions See Chart at Right

Long-arm variants (not needed in most installations) have linkage mount holes at 1.5" (38.1mm), 1.75" (44.5mm), and 2.0" (50.1mm)

	L	Weight
SV32	2.17" (55.1mm)	2 lb. (.91 kg)
SV42	3.10" (78.7mm)	3 lb. (1.36 kg)
SV52	4.02" (102.1mm)	4 lb. (1.81 kg)

Figure 111 – Servo Dimensional Notes

Linkage Mount Position Force and Travel

The two diagrams below illustrate the maximum travel and force available at each linkage mounting point. As can be seen, the closer you mount the linkage to the shaft, the more force the servo can deliver. However, this also means the travel of the arm is shorter. *Again, ensure that the servo arm is nowhere near going over-center throughout the entire range of the control system.*

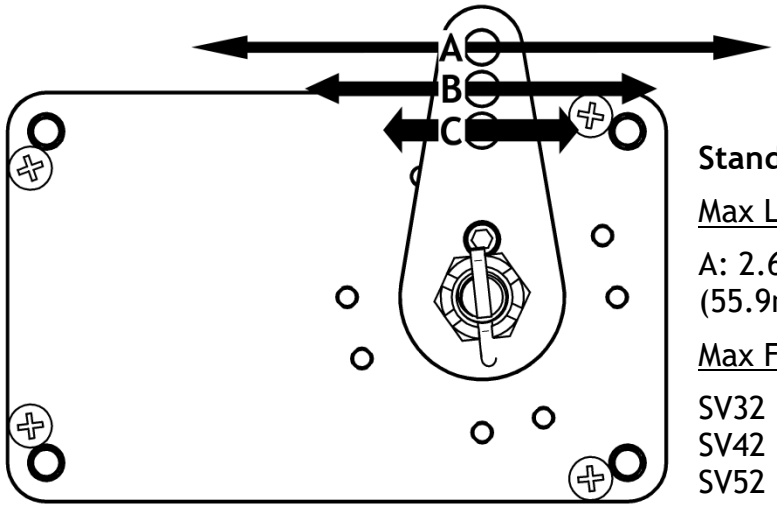

Standard Arm

Max Linear Travel

A: 2.6” (66mm), B: 2.2” (55.9mm), C: 1.8” (45.7mm)

Max Force @ 100% Torque

SV32 - A: 24lb B: 29lb C: 36lb
SV42 - A: 36lb, B: 44lb, C: 55lb
SV52 - A: 48lb, B: 58lb, C: 72lb

Figure 113 – Servo Arm Throw/Torque – Standard Arm

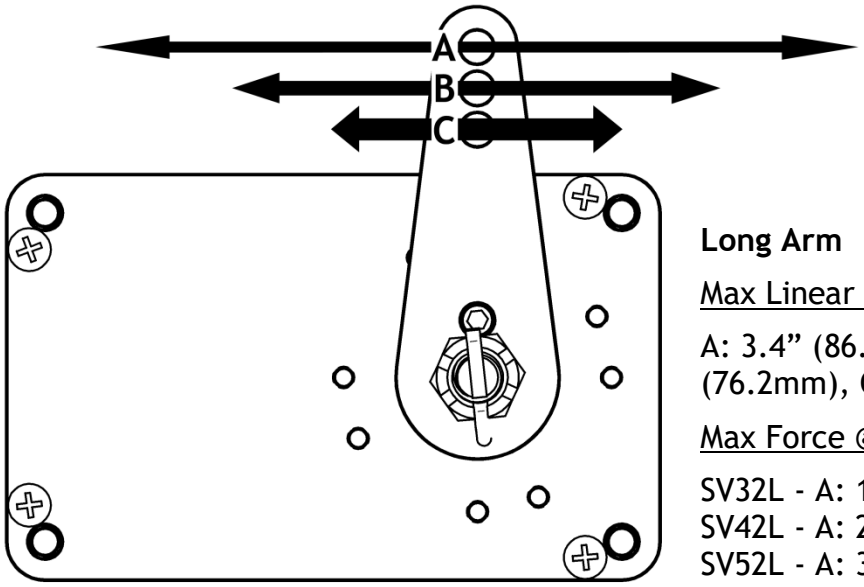

Long Arm

Max Linear Travel

A: 3.4” (86.4mm), B: 3.0” (76.2mm), C: 2.6” (66.1mm)

Max Force @ 100% Torque

SV32L - A: 18lb, B: 20lb, C: 24lb
SV42L - A: 27lb, B: 31lb, C: 36lb
SV52L - A: 36lb, B: 41lb, C: 48lb

Figure 114 – Servo Arm Throw / Torque – Long Arm

The maximum linear travel specifications called out above denote the distance traveled by the location on the arm such that it is 60° from center at maximum distance in either direction (e.g., the A hole on the standard servo arm can linearly travel 1.3” (33mm) from center in either direction).

During installation, the linkage hardware must be connected to the servo arm such that the servo can actuate the connected control surface while approaching, but not exceeding the called out maximum linear travel specification. If too much slippage occurs during servo flight testing, it may be necessary to use a stronger servo.

Each Dynon Avionics servo includes a precision-machined brass shear screw that pins the servo arm to the servo arm attachment, providing an ultimate manual override. Servo shear screws will break at the application of 100 inch-pounds of torque, at which point the servo arm will travel freely. *If the brass shear screw is broken during autopilot installation or usage, do not replace it with a standard screw*– contact Dynon Avionics Technical Support (contact information at the beginning of this manual) for a replacement shear screw. Instruction for replacing the shear screw can be found at http://docs.dynonavionics.com.

A broken shear screw indicates an abnormal condition in the installation and/or operation of the autopilot and servo, much as a blown fuse or a tripped circuit breaker indicates a problem in the electrical system. Shear screws should be replaced with proper parts only after any problems are corrected.

The servo shear screw should NEVER be removed or adjusted in the normal process of installing an autopilot servo. Instructions for both replacing a broken shear screw and instructions for changing or replacing the servo arm / capstan assembly can be found at http://docs.dynonavionics.com.

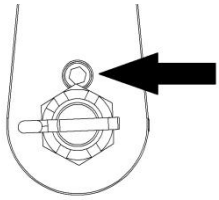

Figure 115 – Shear Screw

There will be a variety of methods used to install the other end of this control linkage to the existing mechanicals of the aircraft. Some systems will use a hole drilled into the bell crank as the point where the servo push rod/rod end combination interfaces with the controls. Others will use an attachment to existing linkage. Others may attach directly to the control stick itself. It is up to the installer to decide which method is best in terms of safety and AP functionality.

Installers should always keep in mind the range of motion of the servo. Total servo arm travel needs to be limited to prevent an OVER CENTER condition (see caution note above), while still preserving the control surfaces' full range of motion. Carefully consider the prevention of an over center condition when selecting the mounting location and linkage attachment point for any servo installation. The built-in control stops of the aircraft will limit the servo arm travel when installed correctly. Again, Dynon Avionics strongly recommends that the included Range of Motion Limiting Bracket be installed in order to absolutely prevent the possibility of an over center condition. The Range of Motion Limiting Bracket should not be used as a normal stop; the aircraft's built-in stops should always be the primary range limit. The Range of Motion Limiting Bracket can be installed in different orientations depending on the aircraft geometry. However, it is important that it constrain the servo arm such that is unable to travel over center in either direction. An example of how the Range of Motion Limiting Bracket can be installed is

demonstrated below. Use only the screws that are provided or specified in the Range of Motion Limiting Bracket Kit Installation Instructions (include with the Bracket Kit).

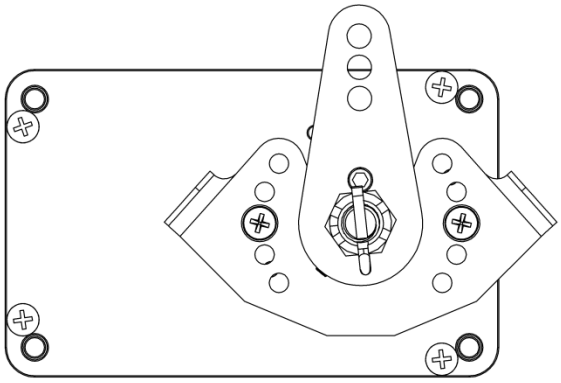

Figure 116 – Servo Range of Motion Limiting Bracket, Front

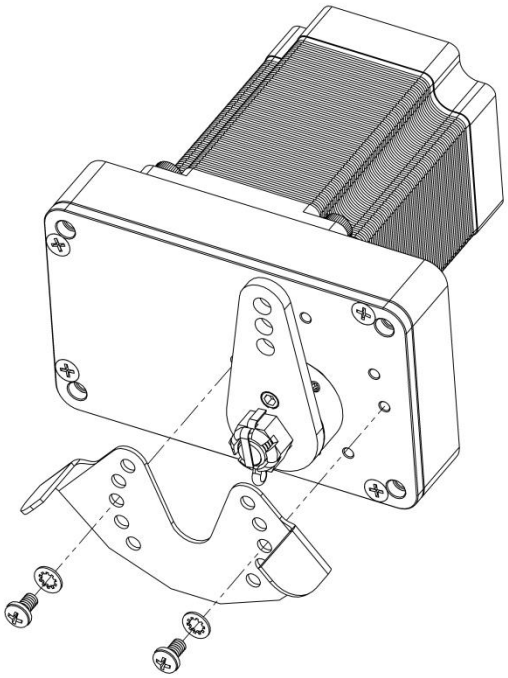

Figure 117 – Servo Range of Motion Limiting Bracket - Isometric

The bushings and other mechanical components in Dynon Avionics Autopilot servos are self-lubricating and should not be additionally lubricated.

Minimizing Free Play

It is important that the autopilot servo have positive control of the aircraft control surface when engaged. If there is free play or “slop” anywhere between the servo, the linkages that connect it to the aircraft, and the aircraft control surface, the autopilot’s performance may suffer. To test for free play:

- Immobilize the autopilot servo arm. This can be accomplished by manually restraining the autopilot arm/capstan, or by engaging the autopilot on the ground in servo test mode SETUP MENU > HARDWARE CALIBRATION > AP SERVO CALIBRATION > TEST (you can start this test, proceed to the step where it first activates and immobilizes the servos, and then cancel the test mode once you've performed this free play test).
- Gently attempt to move the aircraft control surface by manipulating it manually by hand. If there is any significant movement possible - more than 1 degree of free play of the control surface is considered excessive - examine the servo, its mounts, and the linkages and/or cables that connect it to the control surface to discover where the play is being introduced.

Autopilot System Electrical Installation

Figure 118 provides an overview of the autopilot electrical system. Note that SkyView supports up to three servos (pitch, roll, yaw).

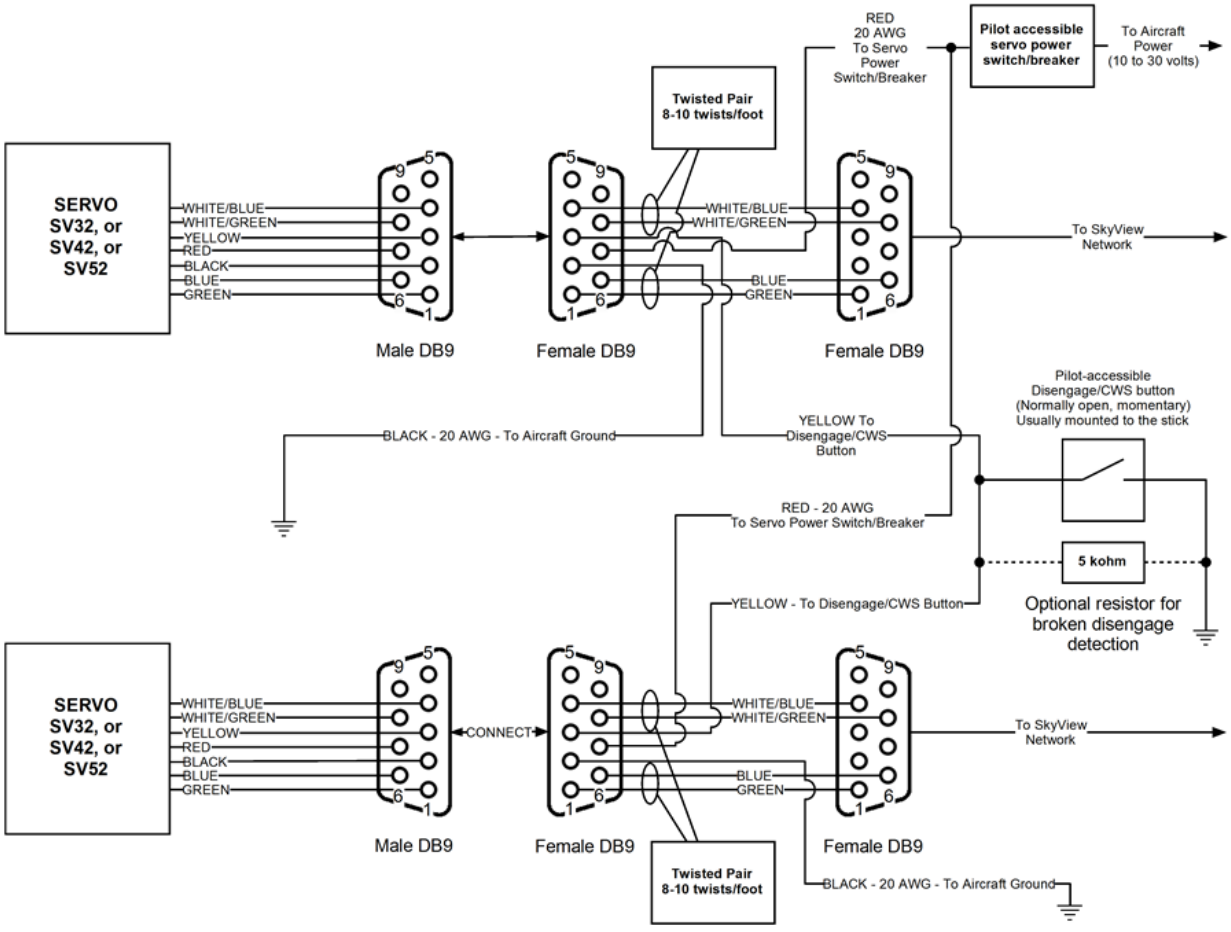

Figure 118 – SkyView Two Axis Autopilot System Electrical Installation Overview (All Connectors Rear View)

The following sections describe the electrical installation of each subsystem in detail.

Servo Electrical Installation

Dynon Avionics' servos are supplied with 7 unterminated wires, each about 8" in length. We recommended that you use the SV-NET-SERVO (one per servo) network cabling kit when installing servos; however, it is ultimately the responsibility of the installer to decide on connectors and associated wiring.

Table 75 describes servo wire colors, and pins for DB9 connectors supplied in the SV-NET-SERVO Kit.

Color	Function	SV-NET-SERVO D9M Pin	Notes
Red	Power	7	10 to 30 volts DC*
Black	Aircraft Ground	2	Main Ground Bus
Green	SkyView Network Data 1 A	1	Connected in parallel with other SkyView Network devices
Blue	SkyView Network Data 1 B	6	Connected in parallel with other SkyView Network devices
Yellow	Roll/Pitch Servos AP Disengage / Control Wheel Steering (CWS) Button	3	Connected through a normally-open pushbutton switch to Ground (disengages AP when button is pushed). If both roll+pitch servos are installed, connect the yellow wire from each servo to a single pushbutton in parallel.
	Yaw Servos Optional Yaw Damper Engage/Disengage		Connected through a normally-open pushbutton switch to Ground. Operates as a toggle: each press alternates between engagement/ disengagement of yaw damper separately from AP. Do not connect in parallel with roll/pitch servos.
White/Green	SkyView Network Data 2 A	8	Connected in parallel with other SkyView Network devices
White/Blue	SkyView Network Data 2 B	4	Connected in parallel with other SkyView Network devices

Table 75 – SV-NET-SERVO; Detailed Servo Wiring

Circuit Breaker/Fuse

We recommend that electrical power for the autopilot servos be protected with an appropriately sized circuit breaker or fuse that is accessible to the pilot while in flight.

SkyView continuously communicates with the servos even when the autopilot is disengaged. If SkyView is operating, but the servos are not receiving power, PTCH ERR and ROLL ERR will be displayed in Red on the top bar (AP STATUS area, to the left of the clock). Therefore, we recommend that the servo power wiring be designed to receive power whenever SkyView is powered on in routine operation. When the servos are receiving power but the autopilot is not engaged, the servos draw negligible power.

SkyView Network Connection

Connect the servos to the SkyView network according to Figure 118 and Table 75. Dynon Avionics offers the SV-NET-SERVO cabling kit (each kit provides wire and connections for one servo). The kit contains connectors, pins, and 20 feet of wire of each color, which should be sufficient for most servo installations. Also note that the white/blue, white/green and blue, green wire combinations come pre-twisted per recommendation for the data communications pairs for SkyView Network.

Figure 119 is the recommended pin insertion scheme for the three D9 connectors included in the SV-NET-SERVO Kit.

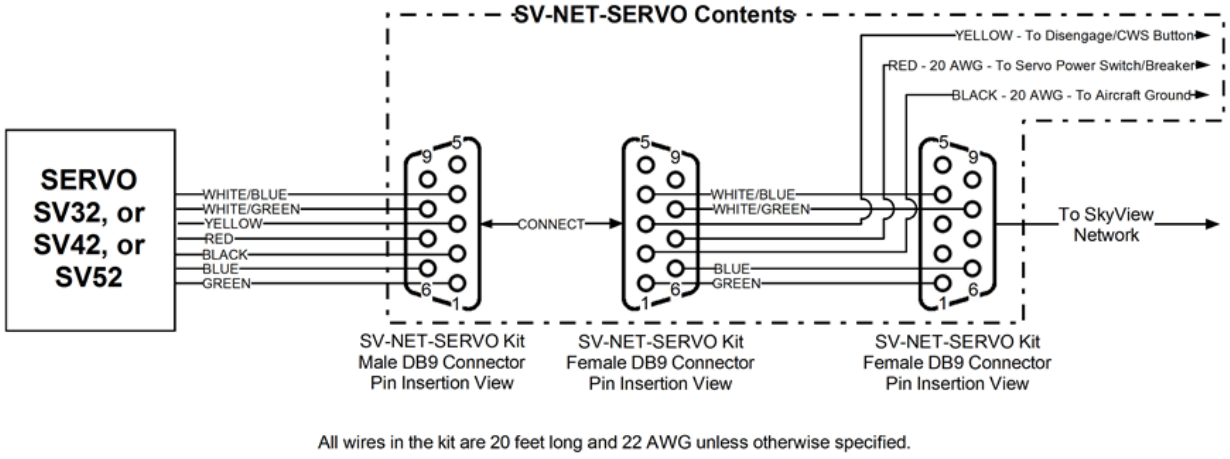

Figure 119 – SV-NET-SERVO Recommended Pin Insertion (All Connectors Rear View)

Extreme care should be observed that D9M connector for the servo ***CAN ONLY BE CONNECTED TO THE MATING D9F CONNECTOR FOR THE SERVO***. If either of these servo DB9 connectors is connected directly to a SkyView Network connection, the SkyView displays (which supply power to the SkyView Network) and other SkyView Network components can be damaged and require *non-warranty repair*.

Remember to configure the network after connecting all modules to a display.

A few SkyView pilots have reported that after installing Dynon Avionics servos, noise is heard in the intercom system whenever the servos operate. Such noise can be eliminated by connecting an electrolytic capacitor between the Red wire (+ terminal of the capacitor) and Black wire (- terminal of the capacitor) at the servo. Dynon Avionics does not supply this component. Capacitor specifications:

- Type: Electrolytic
- Size: 2200 µF (microfarads).
- Voltage: For a 12V aircraft: 30V minimum. For a 24V aircraft: 60V minimum.

AP Disengage/CWS Button (Roll/Pitch Servos)

The installation of the AP Disengage/CWS button is required.

The AP Disengage/CWS button should be in a very accessible location, usually mounted to the stick, yoke, or instrument panel. This button's primary purpose is to immediately disengage the autopilot. *It is also required for autopilot calibration, control wheel steering functionality, and can be used to engage the autopilot.*

This button should be a single pole, normally open, momentary button. Verify that two terminals of the button are shorted when the button is pressed and open (no-connect) when the button is released. One terminal of the button should connect to the servos' yellow wires, and the other should connect to ground.

While not required, you may install a 4.7 - 5.3k ohm resistor across the AP Disengage/CWS button. This allows SkyView to detect a break in this circuitry and alert the pilot if this resistor is present in the installation. If this resistor is installed, set SETUP MENU > AUTOPILOT SETUP > DISENGAGE BUTTON > ENABLE BROKEN LINE DETECT to "YES".

During bootup, SkyView checks the status of the AP Disengage/CWS Button. If SkyView detects that the button is pressed (the input is grounded) during bootup, the AP Disengage/CWS Button is assumed to be stuck (or incorrectly installed), resulting in:
1. A CAUTION message is displayed: AP DISCONNECT STUCK, and
2. The Autopilot (AP) cannot be engaged for the remainder of the time SkyView is operational (will be checked again at next bootup).

(Optional) Yaw Damper AP Engage/Disengage Button

The installation of the Yaw Damper AP Engage/Disengage Button is optional. If it is not installed, the yellow servo wire must **not** be connected to the Roll/Pitch disconnect wires.

The yaw damper servo is automatically engaged whenever the primary (roll/pitch) axes are engaged. However, an optional momentary pushbutton can be installed that allows the pilot to discretely control the engagement/disengagement in addition to the automatic behavior.

If installed, the Yaw Damper AP Engage/Disengage Button button should be in a very accessible location, usually mounted to the stick, yoke, or instrument panel panel. Note that this button is **not** the same button as the required AP Engage/Disengage Button. It must utilize a separate button and additional button.

This button should be a single pole, normally open, momentary button. Verify that two terminals of the button are shorted when the button is pressed and open (no-connect) when the button is released. One terminal of the button should connect to the yaw damper servo's yellow wire, and the other should connect to ground. Note that unlike roll and pitch, the yaw damper's yellow wire must **not** be connected to other servos' wires.

(Optional) External LEVEL Button

SkyView supports an external button that engages LEVEL mode in the same way that pressing MAIN MENU > AUTOPILOT > LEVEL and the LEVEL button on the (optional) SV-AP-PANEL. This allows the pilot to mount a permanent, dedicated button on the panel or yoke/stick.

Dynon Avionics offers the SV-BUTTON-LEVEL for panel installation. The SV-BUTTON-LEVEL has the same appearance as the LEVEL button of the SV-AP-PANEL, and is backlit (controlled by SkyView). Installation instructions for the SV-BUTTON-LEVEL are found in Accessory Installation and Configuration.

Figure 120 – SV-BUTTON-LEVEL Kit

If the SV-BUTTON-LEVEL is not used, the button should be a single pole, normally open, momentary button. Verify that the two terminals of the button are shorted when the button is pressed and open (no-connect) when the button is released. One terminal of the button should (momentarily) connect the SkyView display 37-pin connector Pin 28 (Contact #1 Input), and the other terminal of the button should connect to Ground.

During bootup, SkyView checks the status of the External LEVEL Button input. If SkyView detects that the External LEVEL Button is pressed (the input is grounded) during bootup, the External LEVEL Button is assumed to be stuck (or incorrectly installed), resulting in:

Figure 121 – EXT LEVEL BUTTON STUCK Message

- A Message is displayed: EXT LEVEL BUTTON STUCK
- The External LEVEL Button input is ignored for the remainder of the time SkyView is operational (will be checked again at next bootup).

Considerations for External LEVEL Button and External GO AROUND Button in SkyView Systems with Multiple SkyView Displays

Prior revisions of the SkyView System Installation Guide recommended that in SkyView systems with multiple displays, for redundancy the External LEVEL Button should be connected to all SkyView displays in parallel. The following recommendations supersede that earlier guidance.

External GO AROUND Button is not supported in SkyView SE. If you intend to install and use SkyView SE, do not purchase or install an External GO AROUND Button.

These considerations also apply to the Dynon Avionics SV-BUTTON-LEVEL. Do not connect CONTACT 1 / LEVEL BUTTON inputs, and CONTACT 2 / GO AROUND BUTTON inputs of multiple SkyView displays directly together. If you do so, when one display is powered off, it will cause displays that are powered on to see the CONTACT 1 / LEVEL BUTTON input or the CONTACT 2 / GO AROUND BUTTON as being pushed (the display powered off will "ground" the input). This could cause the unintentional activation of LEVEL mode and/or GO AROUND mode, or could prevent the External LEVEL Button or the External GO AROUND Button from operating.

Installation Options for External LEVEL Button and External GO AROUND Button on Multiple SkyView Displays

Choose one of these options if you have multiple SkyView displays and you want to connect the External LEVEL Button or the External GO AROUND Button on all displays for failover / redundancy:

- Connect the External LEVEL Button and/or the External GO AROUND Button to only one display. The External LEVEL Button and/or the External GO AROUND Button will operate for all displays in the SkyView system as long as the display the External LEVEL Button and/or the External GO AROUND Button is wired to is powered on and operating normally. As a non-flight-critical function, the loss of the External LEVEL Button or the External GO AROUND Button in some display failures may be acceptable for your installation.
    - Use of the LEVEL function via the SkyView soft keys via any operating SkyView display is still possible, as well as pushing the LEVEL button on the (optional) SV-AP-PANEL.
    - Use of the GO AROUND function via the SkyView soft keys via any operating SkyView display is still possible, as well as pushing and holding the UP button on the (optional) SV-AP-PANEL.
- Install a diode for each individual display's connection to the External LEVEL button and/or the External GO AROUND button. The diode should be installed with the cathode end (painted band on the diode) oriented towards the External LEVEL button, and should be installed in-line with the contact wire between the SkyView display and the External LEVEL button and/or the External GO AROUND button. One diode is needed per button, per display. Any diode will work for this application. An example diode is the very common 1N914, available from Radio Shack (P/N 276-1122). With a diode installed for each display, the External LEVEL Button and/or the External GO AROUND button will work correctly with any combination of displays powered on and powered off.

- Use a multi-pole pushbutton (momentary, normally open / push to close) for the External LEVEL Button and/or the External GO AROUND button. With this option, run each display's connection to a different pole on the pushbutton. With the multi-pole pushbutton installed, the External LEVEL Button and/or the External GO AROUND Button will work correctly with any combination of displays powered on and powered off.

Wire Sizing

While it is beyond the scope of this installation guide to advise on specific types of wiring for a particular aircraft, choice of wiring should be sized to 1) minimize voltage drop over the length of the particular wiring run, and 2) conduct the amount of current required by the subsystem without the wiring becoming warm to the touch. Appendix C: Wiring and Electrical Connections contains information and suggested resources for wiring and electrical connections. Generally, 20 AWG wire is a suitable gauge for the servo power / ground wires for lengths up to 20' of wire.

Wiring Installation

Care should be taken such that aircraft wiring is not subjected to chafing, excessive flexing, or connections/junctions subjected to excessive vibration which may cause the connection/junction to fail or short-circuit.

Autopilot Servo Calibration and Test Procedures

There are both ground-based setup and in-flight turning procedures that are required to fully configure your autopilot installation. Initial servo setup / calibration / test procedures are covered in this guide. In-flight procedures are covered in the SkyView Autopilot In-Flight Tuning Guide.

Adjusting autopilot settings while the autopilot is engaged is not recommended, as some settings changes may cause the autopilot to react immediately and counter to the pilot's immediate expectations.

All servos must be properly networked into the SkyView system and IAS tape colors / v-speeds must be configured prior to any servo calibration, testing, or tuning. Reference the Network Setup and Status Section for instructions on how to network the servos into the system and the Airspeed Limitations Section for instructions on how to set IAS tape colors.

Servo Calibration Procedure

Servo calibration cannot be performed without an SV-ADAHRS-200 installed and configured in the SkyView system.

The servo calibration procedure identifies the orientation and range of motion of each servo and must be performed before the servo test procedure. SkyView uses this procedure to automatically differentiate between the pitch and the roll servos.

To calibrate the servos, enter the Servo Calibration Wizard (SETUP MENU > HARDWARE CALIBRATION > AP SERVO CALIBRATION > CALIBRATION) and follow the onscreen instructions to calibrate the servo(s). *If the servo calibration procedure is successful, SkyView will automatically instruct you to run the servo test procedure.*

During AP SERVO CALIBRATION, SkyView checks the status of the AP Disengage/CWS Button. If SkyView detects that the button is pressed (the input is grounded) upon entering AP SERVO CALIBRATION, the AP Disengage/CWS Button is assumed to be stuck (or incorrectly installed), resulting in a message is displayed, and the AP SERVO CALIBRATION is aborted:
The servo disconnect switch appears to be pressed and may be installed incorrectly. The servo disconnect switch should be a type Momentary, Push Button Normal Open (PBNO).
Press cancel below to return to the servo calibration menu.

Servo Test Procedure

The servo test procedure requires a successful servo calibration. The servo test procedure verifies that each servo is configured properly by moving the control surfaces while the installer verifies the correct movement. You may run this procedure on its own at any time after a successful servo calibration. *SkyView will not display AP status on the Top Bar until after this test procedure is successfully completed.*

To run this procedure on its own (after a successful servo calibration procedure), enter the Servo Test Wizard (SETUP MENU > HARDWARE CALIBRATION > AP SERVO CALIBRATION > TEST) and follow the onscreen instructions to test the servo(s).

Autopilot Servo Initial Setup

There are several parameters in the Autopilot Setup Menu (SETUP MENU > AUTOPILOT SETUP) that allow you to tune the behavior of the SkyView autopilot system. This section describes these adjustable parameters. *Note that the Autopilot Setup Menu is only accessible after a successful servo test procedure.*

Autopilot Setup Options

Autopilot Controls

SkyView's autopilot can be operated using one of two very distinct control schemes:

SIMPLIFIED: Two button streamlined autopilot controls: TRK+ALT for flying in the direction and at the altitude you choose, HSI+ALT for following navigation sources like GPS flight plans.

EXPERT: Autopilot controls containing the features that IFR pilots need. Includes VNAV, IAS hold, TRK mode, fully-coupled approaches, mode sequencing, and a flight director.

Setting the SkyView AP to EXPERT mode requires that two SkyView AP servos (Roll *and* Pitch) are installed. If only one servo (either Roll only, or Pitch only) is installed, the SkyView AP can only be set to SIMPLIFIED mode.

For more details on the differences between these two sets of controls, see the SkyView Pilot's User Guide.

To set the Autopilot Control scheme:

1. Go to the Autopilot Controls Adjust Page (SETUP MENU > AUTOPILOT SETUP > AUTOPILOT CONTROLS).
2. Choose SIMPLIFIED or EXPERT controls.
3. Press ACCEPT to save the value or press CANCEL to return to the Autopilot Setup Menu.

Flight Director (Expert Controls Only)

When Expert controls are used, SkyView displays a flight director that provide autopilot control cues to the pilot. It can be set to one of two visual styles:

SINGLE CUE (INVERTED-V): Uses a single "inverted V" symbol to indicate pitch and roll angles that the autopilot will use to meet its goals. When the autopilot is not engaged, pitch and roll the aircraft to align this symbol with the waterline to fly the airplane like the autopilot would.

DUAL CUE (CROSS BARS): Uses separate horizontal and vertical bars across the attitude indicator to indicate the pitch and roll angles that the autopilot will use to meet its goals. When the autopilot is not engaged, pitch and roll the aircraft to center both the horizontal and vertical bars with the waterline to fly the airplane like the autopilot would.

Figure 122 – Flight Director - Single Cue (Inverted-V)

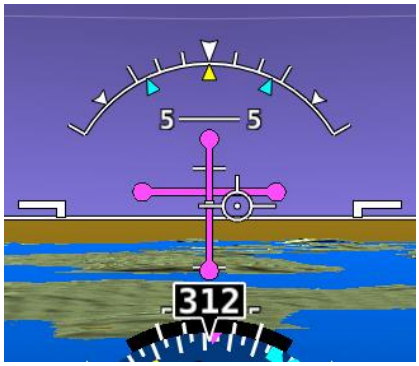

Figure 123 – Flight Director - Dual Cue (cross bars)

For more details on Flight Director behavior, see the SkyView Pilot's User Guide.

To set the Flight Director style:

1. Go to the Autopilot Flight Director Adjust Page (SETUP MENU > AUTOPILOT SETUP > FLIGHT DIRECTOR).
2. Choose SINGLE CUE or DUAL CUE.
3. Press ACCEPT to save the value or press CANCEL to return to the Autopilot Setup Menu.

Roll Axis Configuration

Roll Axis Torque

The roll axis torque parameter specifies how much torque the servo will exert before slipping. Servo slip is indicated by the word SLIP in black letters in a yellow box on the Top Bar for the roll axis as shown in Figure 124.

Figure 124 – Example Roll Axis Servo Slip Warning

Torque must be set high enough to prevent any slip due to air loads, but low enough that the pilot can comfortably override the autopilot should the need arise. *If the servo slips continuously, the autopilot cannot fly the aircraft*. Torque is specified in percent (%) of maximum the servo is capable of exerting. The minimum is 10%, the maximum is 100%, and the default value is 100%. If you can override the servo at 100% torque, use this default value.

To test roll axis servo override force:

1. Return to the Main Menu.
2. Center the aircraft controls.
3. Enter the Autopilot Menu (MAIN MENU > AUTOPILOT).
4. Press the LEVEL button to engage the autopilot.

Now, take the controls and override the servo by moving to either roll left or roll right. Ensure that you are comfortable with the amount of force it takes to override the servo. If you are not, decrease the roll servo torque value by 10% and repeat the test.

Pitch Axis Configuration

Pitch Axis Torque

The pitch axis torque parameter specifies how much torque the pitch servo will exert before slipping. Servo slip is indicated by the word SLIP in black letters in a yellow box on the Top Bar for the pitch axis as shown in Figure 125.

Figure 125 – Example Pitch Axis Servo Slip Warning

Torque must be set high enough to prevent any slip due to air loads, but low enough that the pilot can override the autopilot should the need arise. If the servo slips continuously, the autopilot cannot fly the aircraft. Torque is specified in percent (%) of maximum the servo is capable of exerting. The minimum is 10%, the maximum is 100%, and the default value is 100%. If you can override the servo at 100% torque, use this default value.

To test pitch axis servo override force:

1. Return to the Main Menu.

2. Center the aircraft controls.
3. Enter the Autopilot Menu (MAIN MENU > AUTOPILOT).
4. Press the LEVEL button to engage the autopilot.

Now, take the controls and override the servo by moving to either pitch up or pitch down. Ensure that you are comfortable with the amount of force it takes to override the servo. If you are not, decrease the pitch servo torque value by 10% and repeat the test.

Default Climb Vertical Speed

When using simplified autopilot controls, the default climb vertical speed parameter sets the initial vertical speed the autopilot will command for climbs when an altitude change is requested. You may also control the climb vertical speed after a climb is in progress with the vertical speed bug. If you set this parameter above a vertical speed the aircraft can achieve, the autopilot will run into the airspeed limiter in a climb.

When using expert autopilot controls, the Default Climb Vertical Speed is only used when NOSE UP is pressed while ALT HOLD mode is already engaged. This activates VS mode at the Default Climb Vertical Speed.

The default climb vertical speed parameter is specified in the units set in the Measurement Units Menu (i.e., feet per minute or meters per second; reference page 3-9 for more information regarding configuring the measurement units). The default value is 500 feet per minute

To adjust the default climb vertical speed:

1. Go to the Pitch Axis Default Climb Vertical Speed Adjust Page (SETUP MENU > AUTOPILOT SETUP > PITCH AXIS > DEFAULT CLIMB VERTICAL SPEED).
2. Adjust the default climb vertical speed.
3. Press ACCEPT to save the value or press CANCEL to return to the Pitch Axis Menu.

Default Descent Vertical Speed

When using simplified autopilot controls, the default descent vertical speed parameter sets the initial vertical speed the autopilot will command for descents when an altitude change is requested. You may also control the descent vertical speed after a descent is in progress with the vertical speed bug. If you set this parameter below the vertical speed the aircraft can achieve, the autopilot will run into the airspeed limiter during descent.

When using expert autopilot controls, the Default Descent Vertical Speed is only used when NOSE DOWN is pressed while ALT HOLD mode is already engaged. This activates VS mode at the Default Climb Vertical Speed.

The default descent vertical speed parameter is specified in the units set in the Measurement Units Menu (i.e., feet per minute or meters per second; reference page 3-9 for more information regarding configuring the measurement units). The default value is 500 feet per minute.

To adjust the default descent vertical speed:

1. Go to the Pitch Axis Default Descent Vertical Speed Adjust Page (SETUP MENU > AUTOPILOT SETUP > PITCH AXIS > DEFAULT DESCENT VERTICAL SPEED).
2. Adjust the default descent vertical speed.
3. Press ACCEPT to save the value or press CANCEL to return to the Pitch Axis Menu.

Maximum Airspeed

If the AP is engaged and the Maximum Airspeed limit is changed to a value that is lower than the current airspeed, the AP will immediately act to reduce the airspeed to the new maximum airspeed setting, and may do so aggressively. Dynon Avionics recommends that this setting only be adjusted with the AP disengaged.

The pitch axis maximum airspeed parameter is the highest airspeed at which the pilot may engage the autopilot. If the autopilot is engaged at the time the aircraft's airspeed exceeds the maximum, the autopilot enters an airspeed hold mode and pitches the aircraft up to prevent increasing airspeed. SkyView simultaneously indicates that the aircraft has exceeded the parameter by displaying SPD indicators in the Top Bar as illustrated in Figure 126.

Figure 126 – Top Bar SPD Indicator

If the aircraft's altitude rises above the target altitude bug and the autopilot cannot pitch the aircraft down without going above the maximum airspeed, SkyView presents the prompt:

Figure 127 – Top Bar Airspeed High Indication

The maximum airspeed parameter cannot be set to a value above 95% of Vne, which should be set to the specifications of your aircraft in the Airspeed Limitations Menu (reference page 5-19 for more information) and is specified in the units set in the Measurement Units Menu (i.e., miles per hour, knots, or kilometers per hour; reference page 3-9 for more information regarding configuring the measurement units). As mentioned previously, the maximum value for this parameter is 95% of Vne. This is also the default value.

To set the maximum airspeed:

1. Go to the Pitch Axis Maximum Airspeed Adjust Page (SETUP MENU > AUTOPILOT SETUP > PITCH AXIS > MAXIMUM AIRSPEED).
2. Adjust the maximum airspeed.
3. Press ACCEPT to save the value or press CANCEL to return to the Roll Axis Menu.

Minimum Airspeed

If the AP is engaged and the Minimum Airspeed limit is changed to a value that is higher than the current airspeed, the AP will immediately act to increase the

airspeed to the new minimum airspeed setting. Dynon Avionics recommends that this setting only be adjusted with the AP disengaged.

The pitch axis minimum airspeed is the lowest airspeed at which the pilot may engage the autopilot. *The autopilot cannot be engaged at airspeeds below the minimum airspeed, with the exception of 0 knots, allowing for ground testing.*

When flying at airspeeds lower than the minimum airspeed or when the autopilot is engaged and the aircraft airspeed drops below the minimum, SkyView indicates that the aircraft has dropped below the parameter by displaying SPD indicators in the Top Bar as illustrated in Figure 126 above.

If the aircraft's altitude drops below the target altitude bug and the autopilot cannot pitch the aircraft up without dropping below the minimum airspeed, SkyView presents the prompt:

Figure 128 – Top Bar Airspeed Low Indication

The minimum airspeed parameter must be set to at least (and defaults to) 30% above VS1, which should be set to the specifications of your aircraft in the Airspeed Limitations Menu (reference page 5-19 for more information) and is specified in the units set in the Measurement Units Menu (i.e., miles per hour, knots, or kilometers per hour; reference page 3-9 for more information regarding configuring the measurement units). As previously mentioned, the minimum value for this parameter is 30% above VS1. This is also the default value.

To set the minimum airspeed:

1. Go to the Pitch Axis Minimum Airspeed Adjust Page (SETUP MENU > AUTOPILOT SETUP > PITCH AXIS > MINIMUM AIRSPEED).
2. Adjust the minimum airspeed.
3. Press ACCEPT to save the value or press CANCEL to return to the Roll Axis Menu.

Disengage Button Options

Hold to Engage

Hold to Engage may be set to YES or NO. Setting HOLD TO ENGAGE to YES allows you to engage the autopilot by holding the Disengage/CWS Button for more than 2 seconds. This allows for a convenient alternative to engaging the autopilot via the AUTOPILOT Menu.

When HOLD TO ENGAGE is set to YES, anytime the autopilot is disengaged you can engage it by pressing and holding the Disengage/CWS Button for more than 2 seconds. Note that after 2 seconds, the autopilot status indicator in the Top Bar on the SkyView REL TO ENG (release to engage), as illustrated in Figure 129.

Figure 129 – Autopilot Hold to Engage Mode

This indicates that the servos are in hold to engage mode and are waiting for the button to be released before engaging.

To set the hold to engage mode:

1. Go to the Hold to Engage Adjust Page (SETUP MENU > AUTOPILOT SETUP > DISENGAGE BUTTON > HOLD TO ENGAGE).
2. Set to YES or NO.
3. Press ACCEPT to save or press CANCEL to return to the Disengage Button Menu.

Enable Broken Line Detect

The ENABLE BROKEN LINE DETECT option may be set to YES or NO. *It should only be set to YES if the optional 5 kΩ resistor is installed across the Disengage/CWS Button, as shown in Figure 118.* If the resistor is installed and this option is set to YES, SkyView continuously monitors the AP Disengage/CWS Button circuit for proper resistance. If a broken line is detected, SkyView will display the following message:

AP BROKEN DISCONNECT

If the autopilot is engaged when this condition is detected, it will remain engaged.

Set to YES if the optional 5 kΩ resistor is installed across the 2 terminals of the Disengage/CWS Button. Set to NO if the resistor is not installed. Default is NO.

To set the broken line detection mode:

1. Go to the Enable Broken Line Detect Adjust Page (SETUP MENU > AUTOPILOT SETUP > DISENGAGE BUTTON > ENABLE BROKEN LINE DETECT).
2. Set to YES or NO.
3. Press ACCEPT to save or press CANCEL to return to the Disengage Button Menu.

Control Wheel Steering Mode

Control Wheel Steering may be set to YES or NO. Setting HOLD TO ENGAGE to YES allows you to take temporary manually control of the aircraft to redirect its targets while pressing and holding the Disengage/CWS Button when the autopilot is engaged. See the SkyView Pilot's User Guide for details on Control Wheel Steering behavior. To set the control wheel steering mode:

1. Go to the Control Wheel Steering Mode Adjust Page (SETUP MENU > AUTOPILOT SETUP > DISENGAGE BUTTON > CONTROL WHEEL STEERING MODE).
2. Set to YES or NO.
3. Press ACCEPT to save or press CANCEL to return to the Disengage Button Menu.

Yaw Damper Configuration

The yaw axis torque parameter specifies how much torque the yaw servo will exert before slipping. Servo slip is indicated by an indication just below the slip/skid ball as shown here.

Figure 130 – Example Yaw Axis Servo Slip Warning

Torque must be set high enough to prevent any slip due to air loads, but low enough that the pilot can override the autopilot should the need arise. If the servo slips continuously, the autopilot cannot control the yaw axis. Torque is specified in percent (%) of maximum the servo is capable of exerting. The minimum is 10%, the maximum is 100%, and the default value is 100%. If you can override the servo at 100% torque, use this default value.

Autopilot In-Flight Tuning Procedures

This completes the on-ground portion of Autopilot setup.

Next, please use the SkyView Autopilot In-Flight Tuning Guide to maximize the dynamic flying performance of the Autopilot as installed in your aircraft.

The latest revision of the SkyView Autopilot In-Flight Turning Guide can be downloaded from http://docs.dynonavionics.com.

Continued Airworthiness and Maintenance

Dynon Avionics servos (SV32, SV42, and SV52) do not require lubrication. Do not lubricate the servo unit with grease or oil.

- Inspect the servo for continued stable installation – check for loose bolts, etc.
- Inspect the servo and linkages for excessive mechanical wear from Autopilot operation.
- Inspect the servo wiring in the vicinity of any moving parts to ensure the wiring's insulation has not abraded from Autopilot / servo operation or vibration.

11. SV-XPNDR-261/262 Installation and Configuration

Figure 131 – SV-XPNDR-261; SV-XPNDR-262 is Physically Identical

Dynon Avionics offers two transponders. The SV-XPNDR-262 is a Class 2 Mode-S transponder with Extended Squitter that is limited to use below 15,000 feet and speeds up to 175 knots.

The SV-XPNDR-261 is a Class 1 transponder that can be used above those limitations.

For US aircraft, the FAA 2020 ADS-B Out mandate (14 CFR § / FAR 91.227) requires a Class 1 transponder for flight in Class B or Class C airspaces. Thus, generally, US aircraft should install the SV-XPNDR-261.

Until January 1, 2020 (prior to implementation of the FAA 2020 ADS-B Out mandate), the SV-XPNDR-262 is acceptable for use in US aircraft. After 2020, the SV-XPNDR-262 is acceptable for use in US aircraft if there is no flight within Class B or Class C airspaces.

To answer a frequent question, because they are certified devices, the SV-XPNDR-262 cannot be upgraded to an SV-XPNDR-261.

Throughout this manual, the term SV-XPNDR-261/262 is used for instructions that apply to either unit (they are largely identical, except for the power output). The SV-XPNDR-261/262 transponder responds to both legacy Mode A and Mode C interrogations, as well as Mode S interrogations, from both ground radar and airborne collision avoidance systems. In all cases, the interrogations are received by the transponder on 1030 MHz, and replies are transmitted on 1090 MHz.
The SV-XPNDR-261/262 are DO-181D compliant Mode S level 2els datalink transponders, with support for ADS-B Extended Squitter, which also meets the relevant environmental requirements of DO-160F/ED-14F. The SV-XPNDR-262 has a nominal power output of 125 Watts, and meets the power output requirements for Class 2. The SV-XPNDR-261 has a nominal power output of 250 watts, and meets the power output requirements for Class 1. The ADS-B function meets DO-260B class B0 for the SV-XPNDR-262 and class B1S for the SV-XPNDR-261.

The SV-XPNDR-261/262 is certified to ETSO 2C112b and ETSO C166a, and to FAA TSO C112c and C166b. See Appendix B: Specifications,

~~SV-XPNDR-261 Specifications~~SV-XPNDR-261 Specifications, and SV-XPNDR-262 Specifications for more information.

The SV-XPNDR-261/262 is controlled using SkyView's on-screen menu system. This allows the SV-XPNDR-261/262 to be mounted separately from the instrument panel and thus requires no panel space. SkyView also provides pressure altitude directly to the SV-XPNDR-261/262, eliminating the need for a separate altitude encoder.

The SV-XPNDR-261/262 are "Software-based" – they have internal "Software" (software) that is occasionally updated. Any Software updates for the SV-XPNDR-261/262 are included within SkyView system Software. See SV-XPNDR-261/262 Software Updates later in this section for details on SV-XPNDR-261/262 Software updates.

The SV-XPNDR-261/262 operates at either 14 volt nominal or 28 volt nominal DC power supply; no configuration changes are required.

Figure 132 – Suggested SV-XPNDR-261/262 Installation, Configuration, and Testing Procedure shows a high-level overview of a suggested SV-XPNDR-261/262 installation, configuration, and testing procedures:

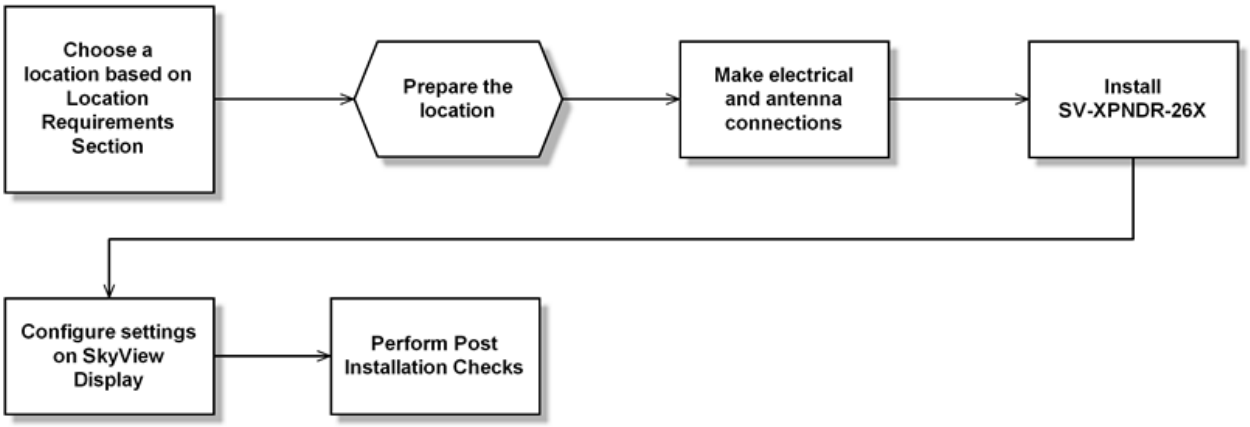

Figure 132 – Suggested SV-XPNDR-261/262 Installation, Configuration, and Testing Procedure

Physical Installation

The SV-XPNDR-261/262 is designed to be mounted in any convenient location in the cockpit, the cabin, or an avionics bay.

The following installation procedure should be followed, remembering to allow adequate space for installation of cables and connectors:

- The SV-XPNDR-261/262 should be located in an area that is accessible, should the SV-XPNDR-261/262 require service.
- Select a position in the aircraft that is not too close to any high external heat source. (The SV-XPNDR-261/262 is not a significant heat source itself and does not need to be kept away from other devices for this reason).

- It is acceptable to locate the SV-XPNDR-261/262 remotely from the panel, such as in the aft fuselage, to minimize the length of coaxial cable between the SV-XPNDR-261/262 and the transponder antenna.
- Orientation of the SV-XPNDR-261/262 is not critical – it can be mounted horizontally, or vertically.
- Secure the mounting tray to the aircraft via the three (3) mounting holes in the tray. The tray should be mounted to a flat surface - it is important that the tray is supported at the dimples as well as the three mounting points.
- Put the SV-XPNDR-261/262 transponder into the secured mounting tray by hooking the connector end under the lip on the tray.
- Lock the SV-XPNDR-261/262 into the mounting tray by clipping the retaining wire over the lugs on the opposite end.
- Avoid sharp bends and placing the cables too near to the aircraft control cables.

Cooling Requirements

The SV-XPNDR-261/262 meets all applicable ETSO/TSO requirements without forced air-cooling.

Attention should however be given to the incorporation of cooling provisions to limit the maximum operating temperature if the SV-XPNDR-261/262 is installed in close proximity to other avionics. The reliability of equipment operating in close proximity in an avionics bay can be degraded if adequate cooling is not provided.

Mounting Tray and SV-XPNDR-261/262 Dimensions

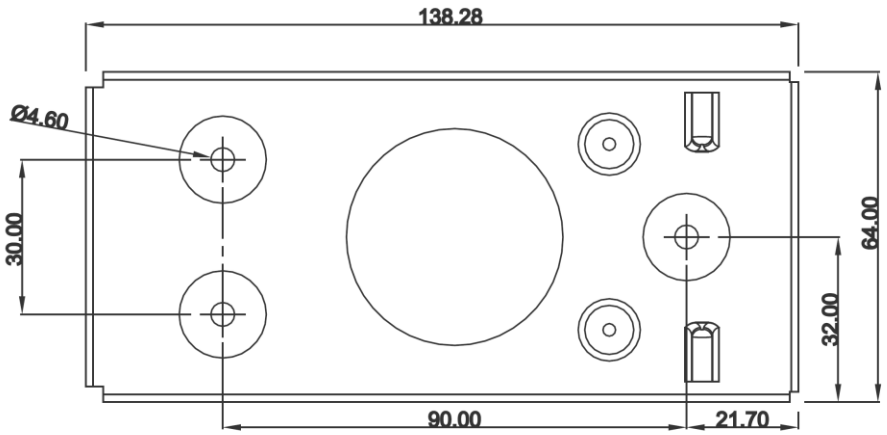

Figure 133 – SV-XPNDR-261/262 Mounting Tray Dimensions (dimensions in millimeters)

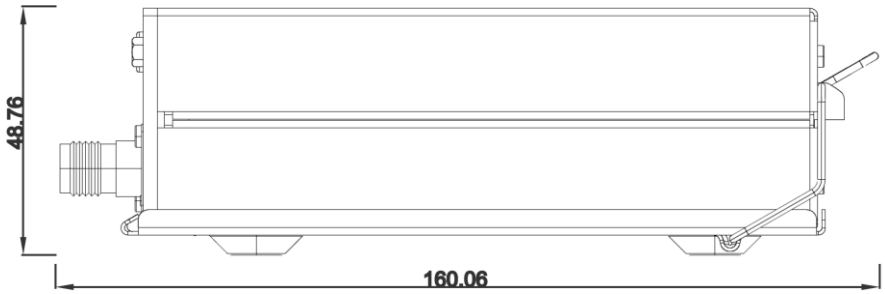

Figure 134 – SV-XPNDR-261/262 Dimensions with Mounting Tray (dimensions in millimeters)

Additional Items Required

Additional items you will require, but which are not in the SV-XPNDR-261/262 package, include:

- Antenna and fixing hardware. The SV-XPNDR-261/262 is compatible with transponder antennas commonly available.
- Cables and TNC Female connector (or TNC Male to BNC Female adapter). You need to supply and fabricate all required cables (or cable and connector is included with your transponder antenna). Guidance on cable types is given below.
- Mounting hardware: To secure the SV-XPNDR-261/262 tray to the airframe you will need at least 3 flat head screws and three self-locking nuts. If the aircraft does not have existing mounting provisions you may need to fabricate additional brackets to support the SV-XPNDR-261/262 tray.

Electrical Connections

SV-XPNDR-261/262 Harness Construction

For connecting the SV-XPNDR-261/262, Dynon Avionics offers the optional SV-HARNESS-XPNDR harness (pictured at right). This harness is not included with the SV-XPNDR-261/262. It comes with 15 feet of wire, and the connector is pre-wired. If required, the harness can be shortened, or lengthened (length is not critical). Table 76 – SV-HARNESS-XPNDR Pinout (below) reflects the wiring colors of the SV-HARNESS-XPNDR.

Figure 135 – SV-HARNESS-XPNDR

The SV-XPNDR-261/262 has a single D25F connector which provides the data and power inputs to the SV-XPNDR-261/262. A single TNC female coaxial connector attaches to the antenna.

Because the SV-XPNDR-261/262 can be mounted in a variety of locations, the harness length requirements will vary between various aircraft.

The SV-XPNDR-261/262 package includes a 25-pin connector and pins if you wish to fabricate your own harness. Refer to the sections below for detailed wiring information. Note that your connector kit may contain a 1.21K resistor. This resistor is only used if you intend to connect a certified GPS receiver for ADS-B Out functionality.

Additional harness construction and wiring information can be found in Appendix C: Wiring and Electrical Connections.

Pin	Function	SV-HARNESS-XPNDR Color	Notes
1	Loopback 1	White	Connect to Pin 2
2	Loopback 1	White	Connect to Pin 1
3	GPS Serial Input	White	Certified GPS Only for ADS-B Out (see explanation below)
4	No Connection	No wire installed	-
5	SV-XPNDR-261/262 Serial RX	Orange	Data Input from SkyView Display(s): Serial 1 – Pin 4 (Brown / Orange), or Serial 2 – Pin 6 (Yellow / Orange), or Serial 3 – Pin 8 (Green / Orange), or Serial 4 – Pin 10 (Blue / Orange)
6	No Connection	No wire installed	-
7	SV-XPNDR-261/262 Serial TX	Violet	Data Output to SkyView Display(s): Serial 1 – Pin 3 (Brown / Violet), or Serial 2 – Pin 5 (Yellow / Violet), or Serial 3 – Pin 7 (Green / Violet), or Serial 4 – Pin 9 (Blue / Violet)
8	No Connection	No wire installed	-
9	No Connection	No wire installed	-
10	No Connection	No wire installed	-
11	No Connection	No wire installed	-
12	Loopback 2	White	Connect to Pin 13
13	Loopback 2	White	Connect to Pin 12
14	Ground	Black	Connect to Aircraft Ground
15	11-33V DC	Red	Connect to Aircraft Power
16	No Connection	No wire installed	-
17	External Standby In	No wire installed	Optional: Not Commonly Connected
18	Mutual Suppression	No wire installed	Optional: Not Commonly Connected
19	Squat Switch In	Yellow	Optional: Not Commonly Connected

Pin	Function	SV-HARNESS-XPNDR Color	Notes
20	Ident Switch In	Green	Optional: Not Commonly Connected
21	No Connection	No wire installed	-
22	No Connection	No wire installed	-
23	No Connection	No wire installed	-
24	No Connection	No wire installed	-
25	No Connection	No wire installed	-

Table 76 – SV-HARNESS-XPNDR Pinout

Figure 136 below depicts how the SV-XPNDR-261/262 connects with other SkyView and aircraft components. Note that many of the connections shown are optional and are not be used in most installations.

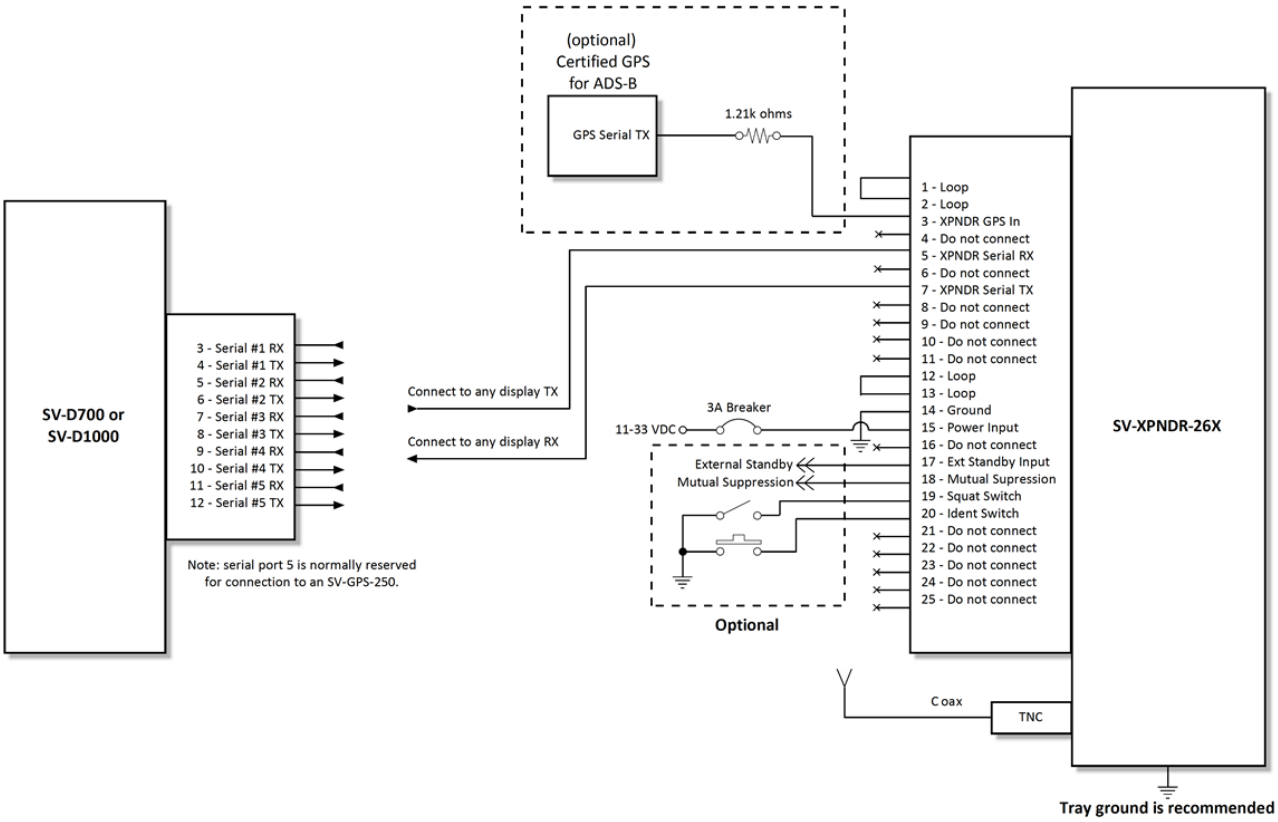

Figure 136 – SV-XPNDR-261/262 Wiring Diagram

Table 77 below shows the connections for each of SkyView's nominally available serial ports. Serial Port 5 is usually used for connection to the SV-GPS-250/2020 GPS receiver. Only ONE of the following serial ports will be used to connect the SV-XPNDR-261/262.

Serial Port	SkyView D37	SV-XPNDR-261/262 D25
1	Pin 3 (RX) Brown/Violet	Pin 7 (TX)
	Pin 4 (TX) Brown/Orange	Pin 5 (RX)
2	Pin 5 (RX) Yellow/Violet	Pin 7 (TX)
	Pin 6 (TX) Yellow/Orange	Pin 5 (RX)
3	Pin 7 (RX) Green/Violet	Pin 7 (TX)
	Pin 8 (TX) Green/Orange	Pin 5 (RX)
4	Pin 9 (RX) Blue/Violet	Pin 7 (TX)
	Pin 10 (TX) Blue/Orange	Pin 5 (RX)

Table 77 – Example SkyView/SV-XPNDR-261/262 Serial Port Connections

Figure 137 below shows a typical set of connections for the SV-XPNDR-261/262 D25 connector, as viewed from the wiring side of the D25 connector:

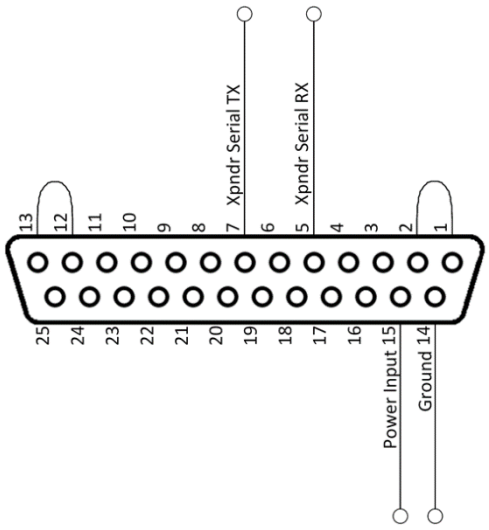

Figure 137 – Typical SV-XPNDR-261/262 Connections (Rear Pin Insertion View)

Figure 138 below shows all possible connections, as viewed from the wiring side of the D25 connector:

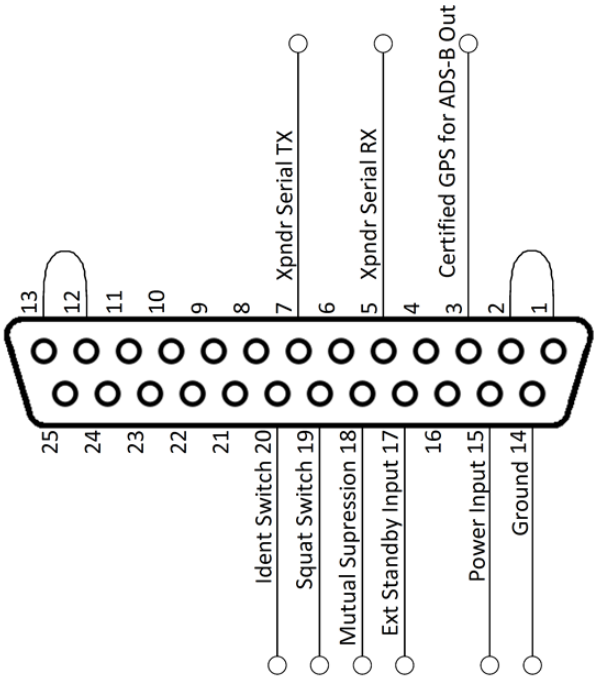

Figure 138 – All Possible SV-XPNDR-261/262 Connections (Rear Pin Insertion View)

Note that Pin 1 and Pin 2 must be connected to each other as depicted above as part of the wiring harness (they are not connected together inside the SV-XPNDR-261/262).

Note that Pin 12 and Pin 13 must be connected to each other as depicted above as part of the wiring harness (they are not connected together inside the SV-XPNDR-261/262).

Power / Ground Input

The power supply can be 11-33 Volts DC; no voltage adjustment is required. 20 AWG wire is sufficient for wire runs up to 50’ for this application. Note that the SV-XPNDR-261/262 must be connected to aircraft power – none of SkyView’s voltage outputs can provide a sufficient amount of power to power the SV-XPNDR-261/262.

It is always good practice to use more than one ground path in an installation. With only one wire there may be only a single grounding path for the SV-XPNDR-261/262, controller and antenna. This can allow static electricity to build up and damage your SkyView display(s). Ensuring that the mounting tray is grounded provides an adequate alternative ground path to protect against such events. This is particularly important when the SV-XPNDR-261/262 is mounted on a non-conducting surface, such as a composite structure, where the mounting tray is often not grounded. Therefore, make sure that the mounting tray is grounded in addition to having the ground wire connected as depicted above.

Note: The SV-XPNDR-261/262 power input is ***not*** *protected against reversed power connections*. If the power and ground inputs to the SV-XPNDR-261/262 are reversed, and power is applied to the Ground input, and Ground is applied to the Power input, the SV-XPNDR-261/262 will be destroyed and this repair will not be covered under warranty. *Check wiring before applying power!*

Pin 1/2 and 12/13 Loopbacks

Pins 1 and 2 must be connected together (as shown in Figure 136, Figure 137, and Figure 138 above. Pins 12 and 13 must be connected together (as shown in Figure 136, Figure 137, and Figure 138 above.

Serial RX (Pin 5) and Serial TX (Pin 7)

All communication between the SV-XPNDR-261/262 module and SkyView is accomplished via a single bidirectional serial connection. To accomplish this:

- Choose an unused serial port on each display to connect the SV-XPNDR-261/262. Note that both the TX and RX sides of the serial port are needed and both the RX and TX lines must be connected to all displays in parallel. It is required that the same numerical serial port on each display be used.
- Connect the SV-XPNDR-261/262 TX wire (pin 7) to the SkyView serial RX of your choosing. If you have multiple displays, the SV-XPNDR-261/262's TX wire must be connected to a serial RX wire on each display.
- Connect the SV-XPNDR-261/262 RX wire (pin 5) to the SkyView serial TX of your choosing. If you have multiple displays, the SV-XPNDR-261/262's RX wire must be connected to a serial TX wire on each display.
- Record the SkyView serial port that you have chosen on each display as you will need to configure it later for use with the SV-XPNDR-261/262.

Mutual Suppression (Pin 18) (optional)

Mutual Suppression allows two or more transmitters on adjacent frequencies to inhibit the other transmitters when one is active to limit the interference effects. It is commonly used between transponders and DME systems, and between transponders and collision avoidance systems. Most installations will not make use of this feature, since most SkyView-equipped aircraft have only one transponder and often do not have DME equipment or other active traffic system that interrogate other aircraft.

The Mutual Suppression pin (18) is an ARINC compatible suppression bus interface, which acts as both an input and an output. The SV-XPNDR-261/262 will assert this signal when it is transmitting, and can be suppressed by other equipment that asserts the signal. The SV-XPNDR-261/262 will drive approximately 24 Volts on the output (independently of supply voltage), and will treat the input as active whenever the bus has greater than 10 Volts.

If you are using the Mutual Suppression feature, simply connect all of the Mutual Suppression wires from devices that use them together.

Ident Switch Input (Pin 20) (optional)

SkyView has an IDENT button in its TRANSPONDER menu that is normally used to ident when requested by ATC. However, the ident switch input allows the IDENT function to be selected using a remote switch. The input is active low, and will be asserted when the voltage to ground is pulled below approximately 4 Volts. Therefore, a momentary switch to ground should be installed on this output if a remote ident switch is desired.

Squat Switch Input (Pin 19) (optional)

In a SkyView system, a Squat Switch is not required because SkyView can automatically detect whether ALT or GND mode is appropriate, and switch modes as necessary. Thus, the Squat Switch Input should be left unconnected. See the AUTO ALT/GND setting in the SV-XPNDR-261/262 Settings section of later in this section.

The Squat switch input allows the SV-XPNDR-261/262 to automatically switch between Airborne and Ground modes, and affects both the Mode S reply behavior and the ADS-B reporting behavior. The input will be asserted when the voltage to ground is pulled below approximately 4 Volts. The logical sense of the input can be programmed to be either active low or active high in the SkyView Setup Menu.

If connected, this must be a mechanical switch that accurately reflects the aircraft's on-ground status. Mode-S certification requirements state that this cannot be a simple airspeed switch.

External Standby Input (Pin 17) (optional)

This input, when connected to Ground, places the SV-XPNDR-261/262 in Standby mode. It should be used to switch between transponders in an installation with two transponders. The input is active low, and will be asserted when the voltage to ground is pulled below approximately 4 Volts.

Direct Serial GPS Position Input (Pin 3)

Prior to 2016, the only way for a SkyView system to comply with the FAA 2020 ADS-B Out mandate was to connect a serial output from a certified GPS to the Direct Serial GPS Position Input (Pin 3). As of January, 2016, Dynon Avionics offers the SV-GPS-2020 GPS Antenna/Receiver Module which provides high-integrity GPS data compliant with the FAA 2020 ADS-B Out mandate. The SV-GPS-2020 transmits high-integrity GPS position data to the SkyView display(s), which then transmit the high-integrity GPS position data to the SV-XPNDR-261/262.

Thus, if an SV-GPS-2020 is installed, this input is not used.

This input is typically used if the aircraft is already equipped with a certified GPS unit (typically for qualification for IFR flight). This input is connected to a serial port output of the certified GPS. See SV-XPNDR-261/262 Settings, GPS Data later in this section for information on how to configure SkyView to use this capability.

If you connect a certified GPS to this input, you must install a 1.21k resistor (included with the SV-XPNDR-261/262) between the certified GPS and the SV-XPNDR-261/262 as shown in Figure 136 – SV-XPNDR-261/262 Wiring Diagram.

Antenna Installation

Dynon Avionics offers a 1090 MHz Rod type antenna suitable for use with the SV-XPNDR-261/262 – P/N 102608-000. The Dynon Avionics Transponder Rod type antenna is supplied with a BNC connector. Dynon Avionics does not supply coaxial cables for this antenna.

Figure 139 - Dynon Avionics 1090 MHz Transponder Antenna

The length of the Dynon Avionics Transponder Rod type antenna on the fuselage of the aircraft, base and whip, is 2.513 inches.

The SV-XPNDR-261/262 antenna should be installed according to the antenna manufacturer's instructions.

The following considerations should be taken into account when choosing a location for the SV-XPNDR-261/262 antenna:

- The transponder antenna should be well removed from any projections, the engine(s) and propeller(s). It should also be well removed from landing gear doors, access doors or others openings which will break the ground plane for the antenna.
- The transponder antenna should be mounted on the bottom surface of the aircraft and in a vertical position when the aircraft is in level flight.
- The transponder antenna should not be installed within 3 feet (0.91 meters) of the ADF sense antenna or any COM antenna.
- The transponder antenna should not be installed within 6 feet (1.83 meters) of a DME antenna.
- Where practical, plan the antenna location to keep the cable lengths as short as possible and avoid sharp bends in the cable to minimize the VSWR (Voltage Standing Wave Ratio).

Electrical connection to the antenna should be protected to avoid loss of efficiency as a result of the presence of liquids or moisture. All antenna feeders shall be installed in such a way that a minimum of RF energy is radiated inside the aircraft.

Antenna Ground Plane

When a conventional aircraft monopole antenna is used it relies on a ground plane for correct behaviour. For ideal performance the ground plane should be very large compared to the wavelength of the transmission, which is 275 mm. In a metal skinned aircraft this is usually easy to accomplish, but is more difficult in a composite or fabric skinned aircraft. In these cases, a metallic ground plane should be fabricated and fitted under the antenna.

The ground plane should be as large as you can sensibly make it. Because it is a function of the wavelength of the transmission, the smallest practical ground plane for a transponder is a square around 120mm per side; as the size increases the performance improves until the ground plane is around 700mm on each side. Anything much larger than that size is unlikely to show significant further improvement.

The thickness of the material used to construct the ground plane is not critical, providing it is sufficiently conductive. A variety of proprietary mesh and grid solutions are available. Heavyweight cooking foil meets the technical requirements, but obviously needs to be properly supported.

Antenna Cable

The SV-XPNDR-262 is designed to meet Class 2 requirements with an allowance of 2 dB for loss in the connectors and cable used to connect it to the antenna. The SV-XPNDR-261 is designed to meet Class 1 requirements with the same 2 dB allowance. Excessive loss will degrade both transmitter output power and receiver sensitivity.

Allowing 0.25dB loss for the connector at each end of the antenna cable assembly leaves an allowance of 1.5dB maximum loss for the cable itself.

An acceptable cable:

- Has less than 1.5 dB loss for the run length needed
- Has a characteristic impedance of 50Ω (50 Ohms)
- Has double braid screens or has a foil and braid screen

Once the cable run length is known, a cable type with low enough loss per metre that meets the above requirements can be chosen. Longer runs require lower loss cable. Consider moving the SV-XPNDR-261/262 closer to the antenna to minimize the losses in the antenna cable – subject to the limits identified above, the SV-XPNDR-261/262 can be at any distance from the SkyView display(s) without affecting performance in any way.

> *Note: Low loss cable typically uses foamed or cellular dielectrics and foil screens. These make such cables especially prone to damage from too-tight bends or from momentary kinking during installation. Once kinked, these cables do not return to full performance when straightened.*

Table 78 below is a guide to the maximum usable lengths of some common coaxial cable types. Actual cable loss varies between manufacturers, there are many variants, and the table is therefore based on typical data. Use it as a guide only and refer to the manufacturer's data sheet for your specific chosen cable for accurate values.

Max Length in Meters	Max Length in Feet	Insertion Loss dB/meter at 1090MHz	MIL-C-17 Cables	Electronic Cable Specialists Type	SSB Electronic
2.54	8’ 4”	0.59	M17/128 (RG400)		
3.16	10’ 4”	0.47		3C142B	
3.81	12’ 6”	0.39	M17/112 (RG304)		
4.50	14’ 9”	0.33			Aircell 5
5.25	17’ 3”	0.29	M17/127 (RG393)	311601	
6.42	21’ 1”	0.23		311501	
6.81	22’ 4”	0.22			Aircell 7
8.22	26’ 11”	0.18		311201	
12.59	41’ 3”	0.12		310801	

Table 78 – Maximum Usable Lengths of Some Common Coaxial Cable Types

Contact Electronic Cable Specialists on +1 414 421 5300 or at http://www.ecsdirect.com for their data sheets. Contact SSB-Electronic GmbH on +49-2371-95900 or at http://www.ssb.de for their data sheets.

When routing the cable, ensure that you:

- Route the cable away from sources of heat.
- Route the cable away from potential interference sources such as ignition wiring, 400Hz generators, fluorescent lighting and electric motors.
- Allow a minimum separation of 300 mm (12 inches) from an ADF antenna cable.
- Keep the cable run as short as possible.
- Avoid routing the cable around tight bends.
- Avoid kinking the cable even temporarily during installation.
- Secure the cable so that it cannot interfere with other systems.

Antenna TNC Female Connector

This section describes the technique for attaching the antenna cable to a TNC Male connector. A TNC Male connector is not supplied with the SV-XPNDR-261/262. The SV-XPNDR-261/262 has

a TNC Female connector. Therefore, you will need to source a TNC Male connector that is compatible with the antenna cable type that meets your aircraft's needs. Alternatively, especially if the transponder antenna you have purchased incorporates coaxial cable and a "BNC" connector, you can purchase a "Male TNC to Female BNC" adapter (see below).

A dual crimp style TNC connector can be completed using a wide range of commercial crimp tools (for example the Tyco 5-1814800-3). The die apertures for the inner pin and the outer shield should be approximately 1.72 mm and 5.41 mm respectively.

- Strip back the coax cable to the dimensions in the table, as shown in the diagram below. Slide 25 mm (1 inch) of heat shrink tubing over the cable.
- Slide the outer crimp sleeve over the cable – it must go on before securing the center contact.

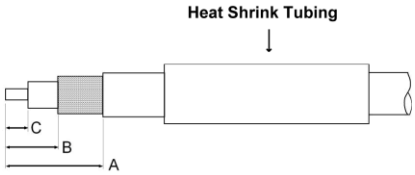

Dimension	Cut size (mm)	Cut size (inches)
A	17.5	0.69
B	7.2	0.28
C	4.8	0.19

Table 79 – Coaxial Cable Strip Dimensions

- Crimp the center contact to the cable.
- Insert the cable into the connector – the center contact should click into place in the body, the inner shield should be inside the body of the connector and the outer shield should be outside the body.
- Crimp the outer sleeve over the shield.
- Slide heat shrink tubing forward (flush to connector) and heat to shrink the tubing.

TNC to BNC Adapter

If you have purchased a transponder antenna that has coaxial cable and a BNC connector already installed, you can use a "Male TNC to Female BNC" adapter to adapt the SV-XPNDR-261/262's TNC connector to a BNC Female connector. As this adapter will be used for transmitting radio frequency energy above 1 GHz, we recommend that you purchase an adapter by a reputable manufacturer of radio frequency connectors and adapter such as Amphenol. The part pictured at right is an Amphenol P/N 242149, and is available from Digi-Key as P/N ACX1378-ND.

Figure 140 - TNC to BNC Adapter (typical)

Transponder-Related SkyView Display Settings

Serial Port Setup

Before the TRANSPONDER SETUP menu can be accessed, the SV-XPNDR-261/262 needs to be set up as a serial device in the SkyView system. To accomplish this:

- SETUP MENU > SYSTEM SETUP > SERIAL PORT SETUP
- Select the serial port to which you connected (physically – the wires) the SV-XPNDR-261/262 – SERIAL PORT 1, SERIAL PORT 2, SERIAL PORT 3, or SERIAL PORT 4.
- Select either DYNON SV-XPNDR-261 or DYNON SV-XPNDR-262 as appropriate. Note that other fields are automatically configured and cannot be changed. Press ACCEPT.

The data transmitted between the SkyView display and the SV-XPNDR-261/262 nominally includes encoded altitude data from SkyView's ADAHRS. Therefore, no other altitude encoder hardware is required. However, some locales may require the use of a certified altitude encoder with the Dynon Avionics SV-XPNDR-261/262. SkyView supports external serial altitude encoders that use Icarus/Garmin format (connected via serial port to one of the SkyView display's serial ports). When an external serial is connected, the SV-XPNDR-261/262 uses the external altitude encoder data source instead of SkyView's pressure altitude (from the SV-ADAHRS-200/201). However, the pressure altitude displayed by SkyView on the PFD page is ALWAYS sourced from the SV-ADAHRS-200/201.

To have SkyView use an external altitude serial encoder as the pressure altitude source for the SV-XPNDR-261/262:

1. Connect a SkyView display serial RX to the respective serial TX connection from the serial altitude encoder. If your SkyView system has multiple displays, this connection must be made to all SkyView displays in parallel.
2. Ensure there is a shared ground between the SkyView display and the serial altitude encoder.
3. Configure the SkyView display serial port RX:
   SETUP MENU > SYSTEM SETUP > SERIAL PORT SETUP > SERIAL PORT x SETUP > SERIAL IN DEVICE > ICARUS/GARMIN ALTITUDE. (The other parameters are set automatically).

SV-XPNDR-261/262 Settings

The aircraft tail number must be set in SETUP > SYSTEM SETUP > AIRCRAFT INFORMATION > TAIL NUMBER prior to configuring the transponder.

The following settings need to be configured before testing and using the SV-XPNDR-261/262. They are all accessed under SETUP MENU > TRANSPONDER SETUP:

- STATUS: Displays online/offline status, displays hardware, Software, and Software versions of the SV-XPNDR-261/262. If shown in YELLOW, a Software update for the SV-

XPNDR-261/262 is available from the SkyView display – see SV-XPNDR-261/262 Software Updates later in this section for details on performing Software updates.

- USA PART 91.227 COMPLIANT: YES | NO Displays whether the combination of the selected GPS, the SV-XPNDR-261/262 model, and the GPS data being received is compliant with 14 CFR § 91.227 (YES is displayed) or not (NO is displayed).

  When this field is highlighted, additional information about the status (YES | NO) is displayed, such as no data is being received from the GPS, thus NO is displayed. NO could be displayed when the GPS is not powered on or does not yet have a full "lock" on the GPS constellation (such as when you are in a hangar). Error Messages include:
  - TRANSPONDER SOFTWARE NEEDS TO BE UPDATED – The SV-XPNDR-261/262's Software has not been updated to v2.6 (minimum for compliance with 14 CFR § 91.227).
  - NO COMPLIANT GPS PRESENT – The type of GPS selected is not compliant.
  - NO GPS DATA (GPS OFFLINE OR MISCONFIGURED) – GPS data of the format selected is not being received by the SV-XPNDR-261/262.
  - GPS PROTOCOL MISCONFIGURED, CHANGE TO ADS-B+ PROTOCOL – The Garmin GPS is transmitting the older ADS-B format rather than the (now) required ADS-B PLUS (+) format.

  See also SkyView Diagnostic - Determining Your SkyView System's Compliance with FAA 2020 ADS-B Out Mandate later in this section.

- TRANSPONDER WARNINGS: If a message other than NONE appears for TRANSPONDER WARNINGS, see Transponder Warnings (Transponder Self Diagnostics) later in this section for detailed explanation of the various transponder warnings.

- GPS DATA: Displays status of the GPS input to the SV-XPNDR-261/262:
  GPS DATA (OK) – GPS data is being received by the SV-XPNDR-261/262
  or
  GPS DATA (OFFLINE) – GPS data is not being received by the SV-XPNDR-261/262.

  Also selects the source of GPS input to the SV-XPNDR-261/262, explained below.

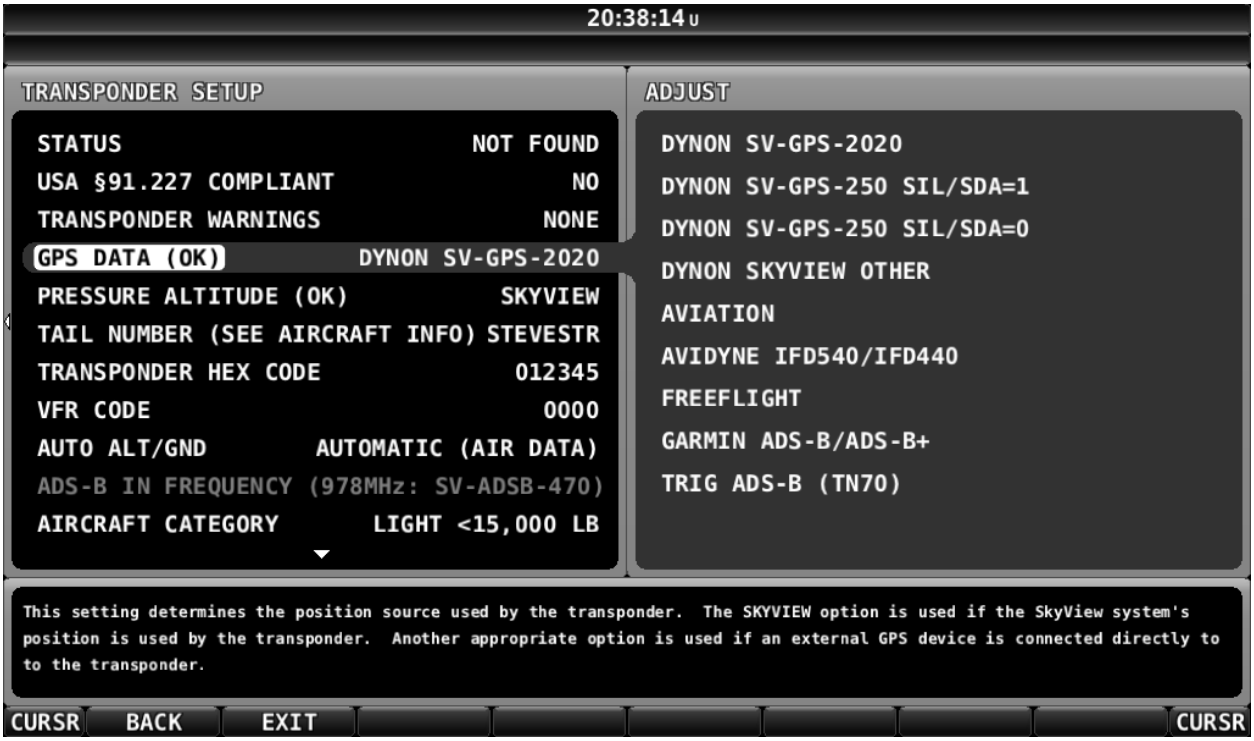

Figure 141 - SV-XPNDR-261/262 GPS DATA Setup

- NONE
  - Select this option if you are operating outside the United State and need to disable ADS-B OUT transmissions without disabling GPS-based functions.
- DYNON SV-GPS-2020:
  - Select this option if you have an SV-GPS-2020 installed.
  - The following ADS-B performance parameters will be transmitted:
    - SDA: 2
    - SIL: 3
    - NACp: Dynamic, as reported by GPS.
    - NIC: Dynamic, as reported by GPS.
    - NACv: 1 (10m/s accuracy)
- DYNON SV-GPS-250 SIL/SDA=1: Select this option if:
  - You do not have an SV-GPS-2020 installed, and
  - You have an SV-GPS-250 installed as your primary GPS.
  - As of early 2016, this setting is required to receive ADS-B Traffic (TIS-B) from the ADS-B system.
  - This setting is the default if you have an SV-GPS-250 as your primary GPS and you update to SkyView Software v14.0 or later.
  - The following ADS-B performance parameters will be transmitted:
    - SDA: 1

- SIL: 1
- NACp: 8, 9 or 10. Dynamic, as reported by GPS.
- NIC: 8 (Containment radius <0.1 NM)
- NACv: 1 (10m/s accuracy)

- DYNON SV-GPS-250 SIL/SDA=0: Select this option if:
  - You do not have an SV-GPS-2020 installed
  - You have an SV-GPS-250 installed as your primary GPS, and
  - You are instructed that transmitting SIL/SDA=1 is not appropriate for your aircraft.
  - The following ADS-B performance parameters will be transmitted:
    - SDA: 0
    - SIL: 0
    - NACp: 8, 9 or 10. Dynamic, as reported by GPS.
    - NIC: 8 (Containment radius <0.1 NM)
    - NACv: 1 (10m/s accuracy)
- DYNON SKYVIEW OTHER:
  - Select this option if you have another type of GPS connected to your SkyView system and you wish that GPS data to be transmitted as part of ADS-B out transmissions.
  - The following ADS-B performance parameters will be transmitted:
    - SDA: 0 (Unknown integrity)
    - SIL: 0
    - NACp: 8, 9 or 10. Dynamic, as reported by GPS.
    - NIC: 8 (Containment radius <0.1 NM)
    - NACv: 1 (10m/s accuracy)

Use of any of the DIRECT GPS-to-transponder position reporting methods below require that the GPS that is connected to the SV-XPNDR-261/262 be TSO'd when used in the US. Additionally, *only specific models are supported via these connections*. Other counties may have different regulatory requirements for GPS position indicators that are connected directly to the SV-XPNDR-261/262's direct serial input.

- AVIATION: Generic GPS outputting Aviation format data, connected directly to SV-XPNDR-261/262 pin 3, transmitting at 9600 baud. As this data format does not contain all of the information that ADS-B position inputs require, Dynon Avionics *does not recommend using this type of GPS and this setting*; there is no advantage in doing so from using the DYNON AVIONICS SV-GPS-250 SIL/SDA=0 setting (above). Using this setting causes the SV-XPNDR-261/262 to transmit the following ADS-B performance parameters:
  - SDA: 0 (Unknown integrity)
  - SIL: 0
  - NACp: 0 (Unknown position accuracy)

- NIC: 0 (Unknown containment)
- NACv: 1 (10m/s accuracy)

- AVIDYNE IFD540/IFD440: Must be connected directly to SV-XPNDR-261/262 pin 3, transmitting at 9600 baud. This device is only supported in SV-XPNDR-261/262 version 2.06 or later; see SV-XPNDR-261/262 Software Updates below for more information about updating the SV-XPNDR-261/262 Software. Using this setting causes the SV-XPNDR-261/262 to transmit the following ADS-B performance parameters:
  - SDA: 2 (Level C integrity)
  - SIL: 3
  - NACp: Sent from GPS to transponder. Refer to GPS documentation.
  - NIC: Sent from GPS to transponder. Refer to GPS documentation.
  - NACv: 1 (10m/s accuracy)
- FREEFLIGHT: FreeFlight 1201 or 1204 GPS, connected directly to SV-XPNDR-261/262 pin 3, transmitting at 19200 baud. Using this setting causes the SV-XPNDR-261/262 to transmit the following ADS-B performance parameters:
  - SDA: 2 (Level C integrity)
  - SIL: 3
  - NACp: Sent from GPS to transponder. Refer to GPS documentation.
  - NIC: Sent from GPS to transponder. Refer to GPS documentation.
  - NACv: 1 (10m/s accuracy)
- GARMIN ADS-B/ADS-B+: Garmin GNS 400W/500W series (WAAS) or Garmin GTN series, both with appropriate Software updates as designated by Garmin, connected directly to SV-XPNDR-261/262 pin 3, transmitting at 9600 baud in “ADS-B+ OUT” or "ADS-B" format. "ADS-B" format only works with SV-XPNDR-261/262 Software 2.02 and above. "ADS-B+" format requires SV-XPNDR-261/262 version 2.06 or later. With 2.06 or later Software the format in use will be auto-detected. The original Garmin ADS-B format is not compliant for use after 2020, and may cause compliance failures in the FAA's ADS-B monitoring system, but is acceptable to use until 2020. See SV-XPNDR-261/262 Software Updates below for more information about updating the SV-XPNDR-261/262 Software. Using this setting causes the SV-XPNDR-261/262 to transmit the following ADS-B performance parameters:
  - SDA: 2 (Level C integrity)
    SIL: 3
    NACp: Sent from GPS to transponder. Refer to GPS documentation.
    NIC: Sent from GPS to transponder. Refer to GPS documentation.
    NACv: 1 (10m/s accuracy)
- TRIG ADS-B (TN70): Must be connected directly to SV-XPNDR-261/262 pin 3, transmitting at 19200 baud. This device is only supported in SV-XPNDR-261/262 version 2.06 or later. See SV-XPNDR-261/262 Software Updates below for more

information about updating the SV-XPNDR-261/262 Software. Using this setting causes the SV-XPNDR-261/262 to transmit the following ADS-B performance parameters:

- SDA: 2 (Level C integrity)
  SIL: 3
  NACp: Sent from GPS to transponder. Refer to GPS documentation.
  NIC: Sent from GPS to transponder. Refer to GPS documentation.
  NACv: 1 (10m/s accuracy)

- PRESSURE ALTITUDE: Displays status of pressure altitude input for the SV-XPNDR-261/262
- TAIL NUMBER (SEE AIRCRAFT INFO): Displays tail number (set in SYSTEM SETUP > AIRCRAFT INFORMATION)
- TRANSPONDER HEX CODE: A Mode-S transponder's HEX code is more precisely called a 24-bit ICAO code. All aircraft that fly with a Mode S transponder must have the correct ICAO code that is assigned to the specific aircraft, configured in the aircraft's Mode-S transponder. The ICAO / HEX code uniquely identifies the aircraft and the country in which it is licensed. All ICAO / HEX codes are assigned by the aircraft licensing authority in the country in which the aircraft is registered/licensed.

  The SV-XPNDR-261/262 setup requires the hexadecimal number (base 16) format; SkyView cannot accept the Octal (base 8) or Decimal (base 10) format.

For US registered aircraft with a conventional (pattern) N-number, when the tail number is entered, the HEX CODE will be set automatically (computed based on the aircraft N-number). If the TRANSPONDER HEX CODE cannot be computed, the TRANSPONDER HEX CODE remains set to 000000.

The HEX CODE needs to be set to the aircraft's assigned code for the SV-XPNDR-261/262 to function properly. The default code of 000000 is not a valid code. If the code is left at 000000, the SV-XPNDR-261/262 will only work in SBY mode. A caution message – XPNDR HEX CODE NOT SET will appear if a SV-XPNDR-261/262 is configured in SkyView, but the HEX CODE is not set to a valid number.

There is no "special" HEX CODE that can be input to the SV-XPNDR-261/262 that will enable it to operate as a Mode A and/or Mode C transponder only.

- For US aircraft can be found at the FAA aircraft registry at http://registry.faa.gov/aircraftinquiry/nnum_inquiry.aspx. The FAA aircraft register shows both the octal number and the hexadecimal value.
- The website http://www.airframes.org provides HEX CODEs for most countries' aircraft that can be input into SkyView. The HEX CODE is the value shown in the ICA024 result field.

  - If you only have the octal number, you must convert it to hexadecimal. There is an Octal to Hexadecimal converter tool available in the Support section of http://www.trig-avionics.com/.
  -

- FLIGHT ID: Allows pilots to enter an ADS-B Flight ID for aircraft. Available options include:
  - UNUSED: ADS-B Flight ID feature is disabled
  - RESET AT POWER ON: ADS-B Flight ID is enabled, and feature control appears on Transponder control page. Upon SkyView power up, Flight ID is blank (i.e., reset). If no Flight ID is entered, SkyView will report the aircraft's tail number by default.
  - SAVE AND RESTORE: ADS-B Flight ID is enabled, and feature control appears on Transponder control page. Upon SkyView power up, previously entered Flight ID is entered (i.e., restored).
- VFR CODE: When the pilot presses the VFR button, a pre-programmed code will replace the current squawk code. The pre-programmed code is set here; the choice of code will depend on the normal location of the aircraft.
  - In the USA, the VFR squawk code is 1200.
  - In most parts of Europe, the VFR squawk code should be set to 7000.
- AUTO ALT/GND: Allows the SV-XPNDR-261/262 to automatically switch between Airborne and Ground modes. Available options include:
  - NONE: Automatic switching disabled
  - SQUAT SWITCH LOW ON GND: Utilizes a physical squat switch connected the SV-XPNDR-261/262 per the above instructions. When this option is selected, the SV-XPNDR-261/262 will consider the aircraft to be on the ground when this switch is low (electrically grounded).
  - SQUAT SWITCH LOW IN AIR: Utilizes a physical squat switch connected the SV-XPNDR-261/262 per the above instructions. When this option is selected, the SV-XPNDR-261/262 will consider the aircraft to in flight when this switch is low (electrically grounded).
  - AUTOMATIC (AIR DATA): The SV-XPNDR-261/262 automatically determines whether the aircraft is in flight or not by using a combination of GPS and air data changes from SkyView. Note that this option only works with SV-XPNDR-261/262 Software 2.02 or above. See SV-XPNDR-261/262 Software Updates below for more information about updating the SV-XPNDR-261/262 Software. This is the option that most SkyView systems should use unless they are required to use a Squat Switch. If a Squat Switch is installed and connected, this option will cause the Squat Switch to be ignored.
- ADS-B IN FREQUENCY:

If an SV-ADSB-470/472/472 is installed and configured under SETUP MENU > SYSTEM SETUP > SERIAL PORT SETUP, this option will be unavailable: The SV-ADSB-470/472/472 automatically receives ADS-B In traffic and weather via the 978 MHz UAT frequency band. The SV-ADSB-472 also uses the 1090 MHz band to receive traffic.

Note that the options in the ADS-B IN FREQUENCY only have an effect with SV-XPNDR-261/262 Software 2.02 or above. See SV-XPNDR-261/262 Software Updates below for more information about updating the SV-XPNDR-261/262 Software.

- If an SV-ADSB-470/472 is not installed and configured, the following settings are accessible:
    - NONE – Set to NONE if there is no ADS-B IN equipment on board the aircraft.
    - 1090 MHz ES – Select this option if there is ADS-B IN equipment on board that receives *only* on 1090 MHz.
    - 978 MHz UAT – Select this option if there is ADS-B IN equipment on board that receives on 978 MHz (other than the Dynon Avionics SV-ADSB-470/472). Select this option if the ADS-B IN equipment on board is dual-band (receives on both 1090 MHz and 978 MHz).

- AIRCRAFT CATEGORY: To assist ATC tracking of aircraft, an aircraft category can be transmitted by Mode S transponders. Set as appropriate for your aircraft.
- AIRCRAFT LENGTH and AIRCRAFT WIDTH: On the ground, ADS-B transmits encoded aircraft size information which is used by ATC to identify taxiing routes and potential conflicts. Using the aircraft length and width (wingspan), in your current distance/speed units (meters or feet), the SV-XPNDR-26 will calculate the appropriate size code for transmission.
- MAXIMUM CRUISE SPEED: Mode S transponders can transmit their maximum airspeed characteristics to aircraft equipped with TCAS. This information is used to help identify threats and to plan avoiding action by the TCAS equipped aircraft. The airspeeds are grouped in ranges. Set as appropriate for your aircraft.
- TIS TRAFFIC: Enables the display of TIS traffic on the SkyView Map page when in an area served by a TIS-enabled RADAR. Note that TIS is a Mode S uplink service that is provided by some US approach RADARs. TIS coverage is limited to the coverage areas of those radars; there is no TIS provision outside the USA. If another traffic device is connected to SkyView and is set up correctly, its traffic information will trump the TIS traffic from the SV-XPNDR-261/262, regardless of this setting.

(US only) Configuration required for SDA/SIL=1 for continued reception of ADS-B Traffic (early 2016)

The following is applicable only to US aircraft equipped with a SkyView system equipped with:

- SV-GPS-250 (but not an SV-GPS-2020)
- No high integrity GPS position source connected to the SV-XPNDR-261/262
- SV-XPNDR-261/262
- SV-ADSB-470/472

Prior to 2016, for aircraft equipped to receive ADS-B In (for SkyView, an SV-ADSB-470/472 is installed), if an aircraft transmits SIL/SDA=0 (or higher level of SIL/SDA), the ADS-B system will transmit TIS-B (ADS-B traffic) to the aircraft so that an aircraft can display "ADS-B traffic" specific to that aircraft.

SIL/SDA (System Integrity Level / System Design Assurance) is a measure of the inherent integrity of the GPS data generated by the GPS unit.

As of early 2016, if an aircraft transmits SIL/SDA=0, the ADS-B system *will **not** transmit TIS-B (ADS-B traffic) to the aircraft*. Thus an aircraft will not (new installations) or no longer (be able to display "ADS-B traffic" specific to that aircraft.

Prior to SkyView Software v14.0 (released January, 2016), SkyView systems equipped with an SV-GPS-250 could transmit *only* SIL/SDA=0. A feature of SkyView Software v14.0 and later allows a SkyView system equipped with an SV-GPS-250 to transmit either SIL/SDA=0 or SIL/SDA=1. This change is made by default when a SkyView system, with an SV-GPS-250 as its primary GPS, is updated to SkyView Software v14.0 (or later).

After your SkyView system is configured to transmit SIL/SDA=1, the ADS-B system will (again) transmit TIS-B (ADS-B traffic) to an aircraft so that an aircraft can display "ADS-B traffic" specific to that aircraft. This is only effective for the period early 2016 through December 31, 2019. Beginning January 1, 2020, the FAA 2020 ADS-B Out mandate is in effect, and SIL/SDA=1 is no longer adequate.

SkyView Systems with an SV-GPS-250 as primary GPS…

… are changed to SDA/SIL=1 when Software is updated to v14.0 (or later)

The following is applicable to all aircraft with a SkyView system equipped with:

- SV-GPS-250 (but not an SV-GPS-2020)
- No high integrity GPS position source connected to the SV-XPNDR-261/262
- SV-XPNDR-261/262

In SkyView systems so equipped, with Software earlier than v14.0, the following setting was in effect:

SETUP MENU > TRANSPONDER SETUP > GPS DATA (OK) > SKYVIEW

This setting caused the SkyView system to transmit SIL/SDA=0.

After updating your SkyView system to v14.0 (or later), that setting is automatically changed (new default) as illustrated in Figure 142:

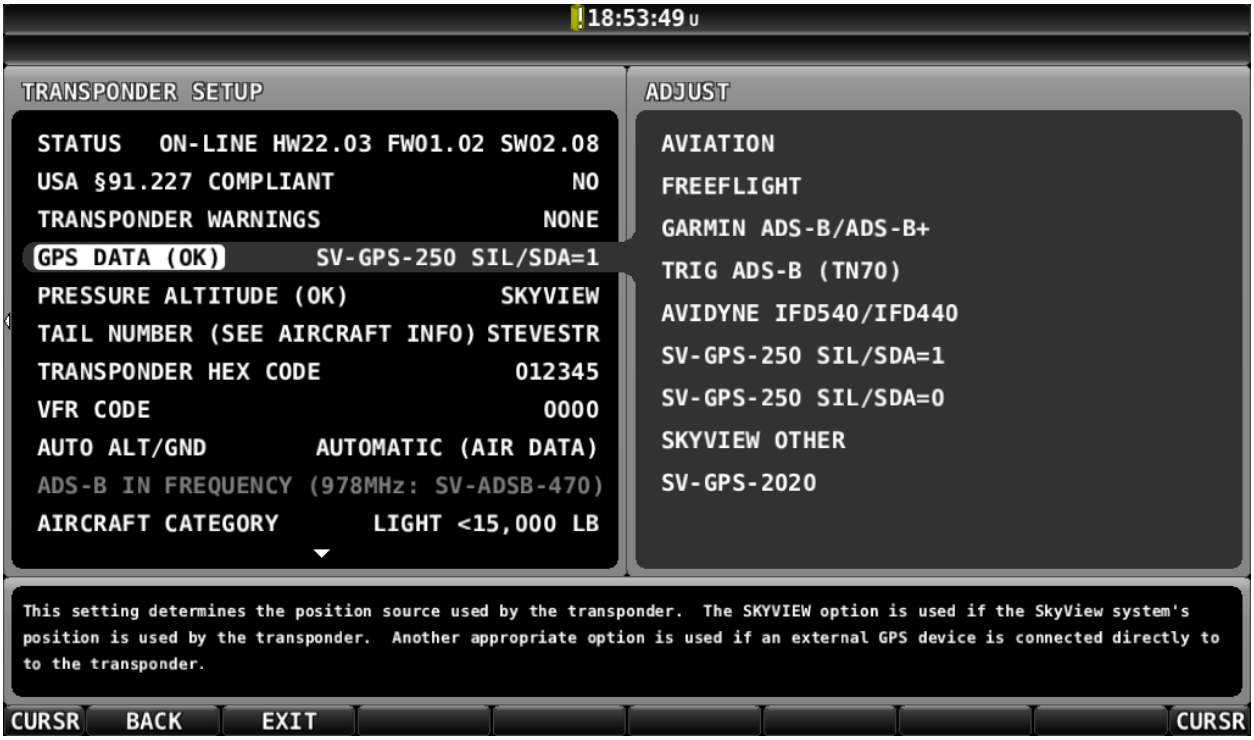

Figure 142 –GPS DATA Setting (for SV-GPS-250) Changed as of v14.0 and later

Note that:
SETUP MENU > TRANSPONDER SETUP > GPS DATA (OK) > SKYVIEW

is changed to:
SETUP MENU > TRANSPONDER SETUP > GPS DATA (OK) > SV-GPS-250 SIL/SDA=1

If you have a SkyView System with an SV-GPS-250 as your primary GPS, an SV-XPNDR-261/262, do not have a high integrity GPS connected directly to the SV-XPNDR-261/262, and you wish for your aircraft to transmit SIL/SDA=0 (same as Software versions earlier than v14.0) instead of SIL/SDA=1:

SETUP MENU > TRANSPONDER SETUP > GPS DATA (OK) > (one more right click)

Change SV-GPS-250 SIL/SDA=1 to SV-GPS-250 SIL/SDA=0 and push the ACCEPT button.

See Figure 151 – SV-GPS-250 SIL/SDA=1 Compliance Statement at the end of this section.

(US-Only) Equipping for compliance with FAA 2020 ADS-B Out Mandate

The FAA's ADS-B rule currently permits class A1, A1S, A2, A3, B1S, or B1 transponder-based 1090ES ADS-B transmissions for compliance once the FAA 2020 ADS-B Out rules mandate goes into effect January 1, 2020. Therefore, only the higher power class B1S SV-XPNDR-261 will be able to meet the 2020 ADS-B Out requirement. If your aircraft is equipped with an SV-XPNDR-262, it must be replaced with an SV-XPNDR-261 (or other Class 1 Mode-S transponder) to be compliant with the FAA 2020 ADS-B Out mandate.

It is important to note that in the US, the ADS-B Out "mandate" and the associated GPS requirements do not go into effect until January 1, 2020, and the mandate only requires compliance in specific airspaces. If you do not have an SV-GPS-2020 (or an appropriately TSO'd WAAS IFR GPS navigator - such as the Garmin GTN or GNS (WAAS only) series) installed, SkyView will send data from the SV-GPS-2020 to the SV-XPNDR-261/262. Until January 1, 2020, it is acceptable for the SV-XPNDR-261 to transmit GPS position data SV-GPS-250, and after 2020 it is acceptable to use this data if you do not fly in ADS-B required airspace.

Note that after 2020, only the (Class 1) SV-XPNDR-261 is capable of meeting the 2020 ADS-B Out mandate. The (Class 2) SV-XPNDR-262 cannot be used for 2020 ADS-B Out compliance credit since it does not meet the power transmission requirements of the ADS-B rule.

The FAA 2020 ADS-B Out mandate is codified in 14 CFR § 91.225 and 14 CFR § 91.227. In general, these regulations require that as of January 1, 2020, if you operate an aircraft in, below, or above Class B or Class C airspace, or above 10,000 feet in Class E airspace, an airplane plane must be equipped with:

- A Class 1 Mode S transponder with 1090ES ADS-B Extended Squitter that meets the performance required in 14 CFR § 91.227 (or UAT; Dynon Avionics' solution uses the former)
- The GPS supplying position data to the above transponder must meet the specific performance requirements as defined in 14 CFR § 91.227.

The Dynon Avionics SV-XPNDR-261, as a TSO C166B device, meets the transponder and ADS-B transmission requirements for 14 CFR § 91.225 and 14 CFR § 91.227.

The Dynon Avionics SV-GPS-2020, as a high integrity GPS receiver, meets the specific performance requirements as defined in 14 CFR § 91.227.

Additional options for a GPS receiver that meets the specific performance requirements as defined in 14 CFR § 91.227 include (that are supported by direct input to the SV-XPNDR-261/262):

- Avidyne IFD440 and IFD540
- FreeFlight 1201 and 1203
- Garmin GNS (WAAS only)
- Garmin GTN
- Trig Avionics TN70

The above units, when connected directly to the SV-XPNDR-261, is under review by the FAA as of March, 2015. In the interim, these GPS devices, updated to their latest Software, connected directly to an SV-XPNDR-261, updated to its latest Software, meet the performance requirements required by 14 CFR § 91.227 when connected and configured per this installation guide.

Installation of Dynon Avionics SV-GPS-2020 for compliance with FAA 2020 ADS-B Out mandate

The most common GPS position source for compliance for performance requirements for GPS data for FAA 2020 ADS-B Out mandate is the SV-GPS-2020 GPS Antenna/Receiver Module (High Integrity GPS - meets FAA 2020 ADS-B Out requirements). Installation is described in SV-GPS-250/2020 GPS Receiver Installation and Configuration earlier in this manual. For compliance, the SV-GPS-2020 must be installed in conjunction with an installed SV-XPNDR-261 with up-to-date Software (see SV-XPNDR-261/262 Software Updates later in this section), and SkyView Software v14.0 (or later).

If you have already installed and configured the serial port setup for an SV-GPS-2020, perform the following steps to complete the SV-GPS-2020 installation:

SETUP MENU > TRANSPONDER SETUP > GPS DATA (OK) and select DYNON SV-GPS-2020.

See Figure 150 – SV-GPS-2020 14 CFR § 91.227 Compliance Statement at the end of this section.

SkyView Diagnostic - Determining Your SkyView System's Compliance with FAA 2020 ADS-B Out Mandate

SkyView can provide guidance as to whether your ADS-B Out installation and configuration is compliant with the FAA ADS-B Out 2020 Mandate (SkyView Software v12.2 or later is required): SETUP MENU > TRANSPONDER SETUP – Note the second line:

USA PART 91.227 COMPLIANT: YES | NO

If your SkyView system is not compliant with 14 CFR § 91.227, some guidance as to why your SkyView is not compliant will be provided. In Figure 143 below, the SkyView system has an SV-GPS-250 connected, set to SIL/SDA=1, which as explained elsewhere, does not meet the requirements for 14 CFR § 91.227 (ADS-B OUT), and thus this SkyView system is not compliant with 14 CFR § 91.227.

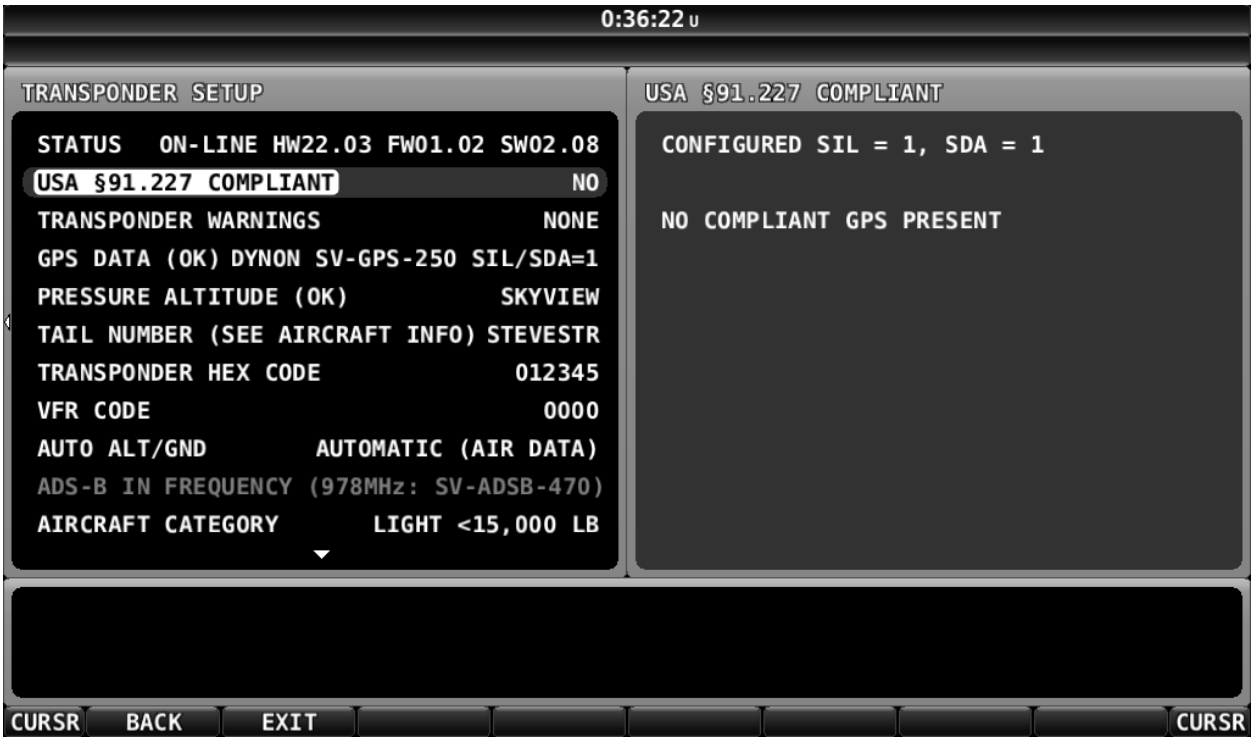

Figure 143 - 14 CFR § 91.227 Compliance Status – Not Compliant

If your SkyView system *is* compliant with 14 CFR § 91.227 (all required elements present, with good GPS data), YES will be shown. Figure 144 below illustrates a SkyView system with all the required elements present, online, and good GPS data is being received.

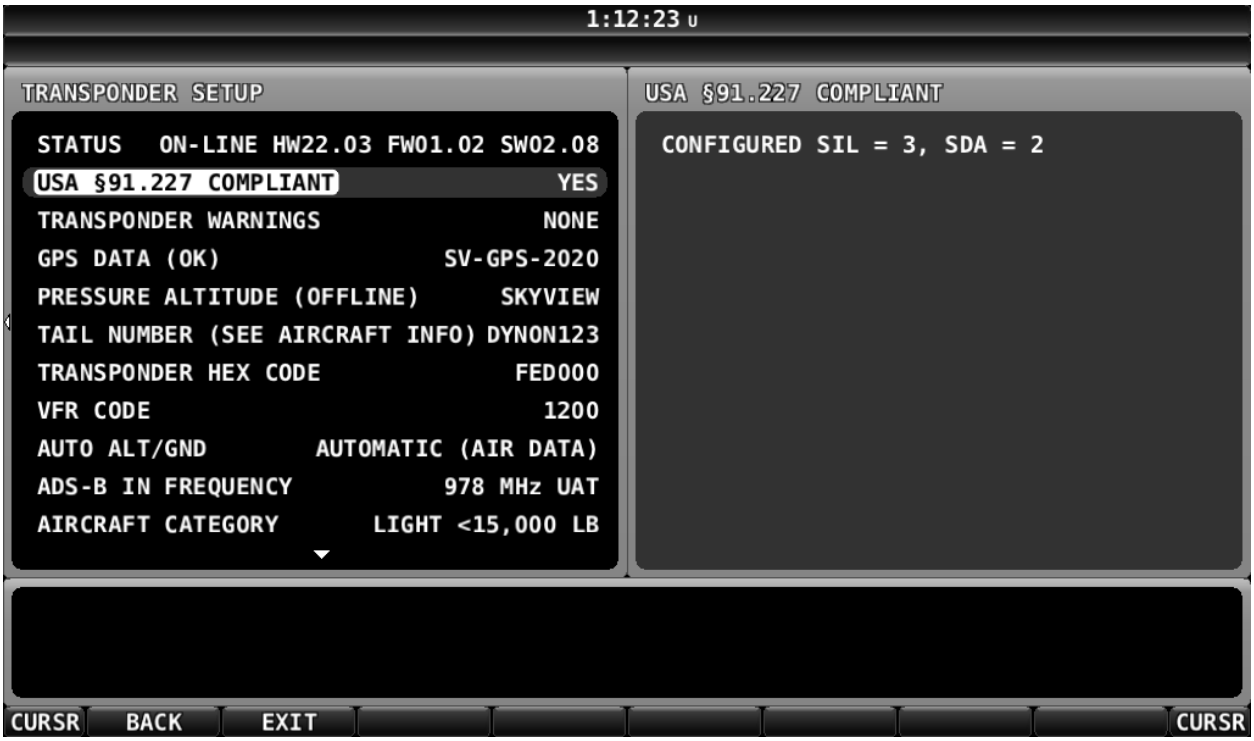

Figure 144 - 14 CFR § 91.227 Compliance Status – Compliant

FAA Report for Compliance with FAA ADS-B OUT 2020 Mandate

After you have updated your SkyView system with a SV-GPS-2020 (or other IFR GPS connected directly to the SV-XPNDR-261), and updated your SV-XPNDR-261's Software to SW02.08 or later, you should fly within an ADS-B coverage area(s) for at least several hours (minimum), or days (optimum), before requesting the report below. This will give the ADS-B system some reasonable amount of data with your aircraft's *new* ADS-B configuration on which to assess your compliance with the FAA 2020 ADS-B mandate.

Go to https://www.faa.gov/nextgen/programs/adsb/

See the first highlighted section entitled
ADS-B Out Equipped?
E-mail us with your N-number, ADS-B transmitter and GPS make/model numbers to find out if your equipment is working properly.

The email address is:
9-AWA-AFS-300-ADSB-AvionicsCheck@faa.gov

Include the following in the email message:

- (your N-number)
- ADS-B transmitter: Dynon Avionics SkyView SV-XPNDR-261 transponder
- GPS: Dynon Avionics SV-GPS-2020

The FAA will email you back a report showing whether you comply, or not, with the FAA 2020 ADS-B mandate. If you do not comply, there will be detailed information about your aircraft's issues in complying with the FAA 2020 ADS-B Out mandate.

Altitude Encoder Calibration

In most transponder systems, a calibration is normally carried out every 24 months, as part of the altimeter checks on the aircraft. The maximum allowed difference between the primary altimeter and the altitude encoder is 125 feet in ETSO C88a and TSO C88b. The primary altimeter in SkyView and the altitude encoder are the same device (SV-ADAHRS-200/201). It is therefore impossible for the encoder and the primary altimeter to exceed 125 feet of altitude difference. They will always be exactly the same as each other, thereby meeting the TSO requirements. Therefore, no altitude encoder calibration is possible or necessary.

At times it may be useful to know the altitude that is being reported to the transponder. Since SkyView sends pressure altitude to the SV-XPNDR-261/262, setting BARO to 29.92 will display the pressure altitude being transmitted to the transponder in the normal SkyView altitude display on the right side of the PFD page.

However, note that there is a single point altitude adjustment, located in SETUP MENU > HARDWARE CALIBRATION > ADAHRS CALIBRATION > ALTITUDE OFFSET that adjusts SkyView's barometric altimeter. This adjustment affects both the displayed altitude and the encoded altitude that is sent to other devices.

SV-XPNDR-261/262 Software Updates

If your SkyView or SkyView SE system has more than one SkyView display, before you commence with the SV-XPNDR-261/262 Software update, it is recommended to power off all but one SkyView display. Doing so will reduce the power drain on your aircraft electrical system during the SV-XPNDR-261/262 Software update, and minimize the chances of any interruptions to the update process while it is underway.

You can power off an individual display by pushing and holding Button 1 on the display to be powered off.

To determine your SV-XPNDR-261/262's Software version, go to SETUP MENU > TRANSPONDER SETUP and observe the STATUS line, as illustrated in Figure 145 below.

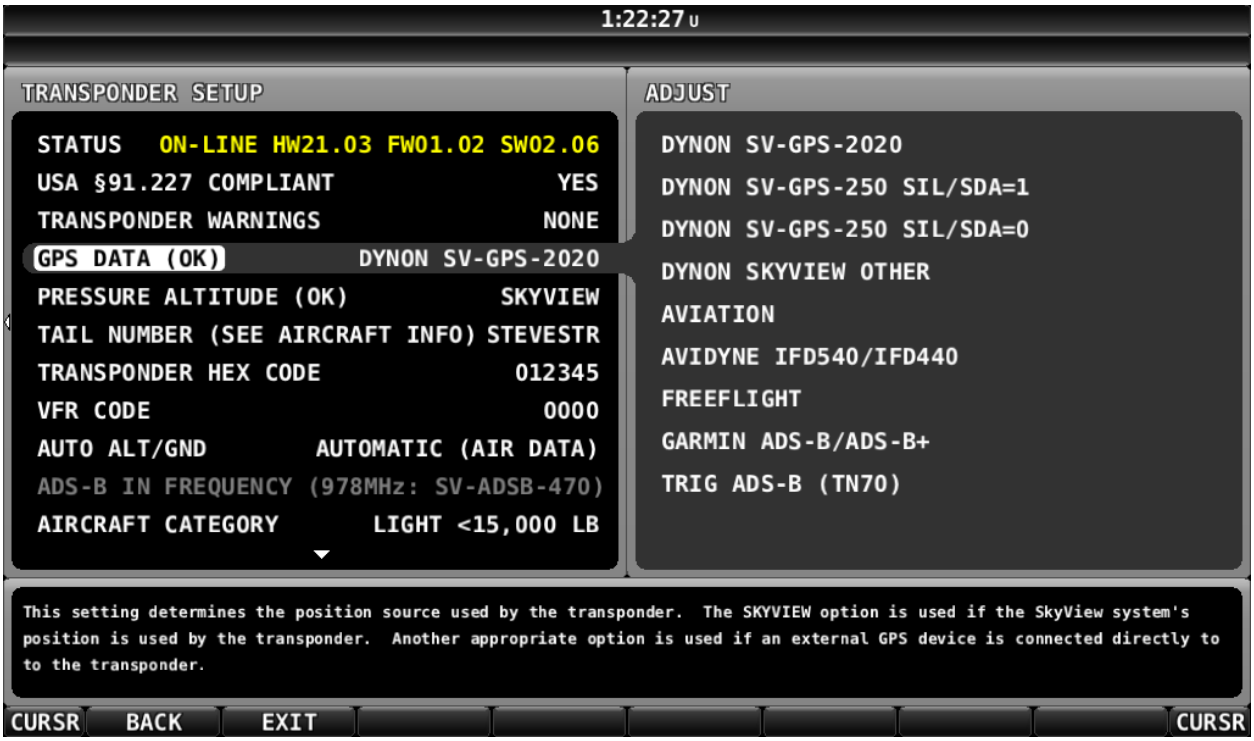

Figure 145 – SV-XPNDR-261/262 Software Update Available

If the STATUS line is shown in YELLOW, a Software update for the SV-XPNDR-261/262 is available from the SkyView display.

If the STATUS line is shown in White (normal), as illustrated in Figure 149 below, the SV-XPNDR-261/262 Software is up-to-date with the Software update available in the current version of SkyView Software currently installed on your SkyView display.

To update your SV-XPNDR-261/262, select STATUS and right-click. You will see the screen shown in Figure 146 below.

Note the reference to “LOAD WILL BE INITIATED BY MASTER SCREEN”. In a SkyView system, one display is elected “Master” behind the scenes, and the “Master” display will be the one to actually load the new Software onto the SV-XPNDR-261/262… which may not be the display that you began the Software update on (if all displays remained powered on) – see the tip at the beginning of this procedure to power off all but one SkyView display.

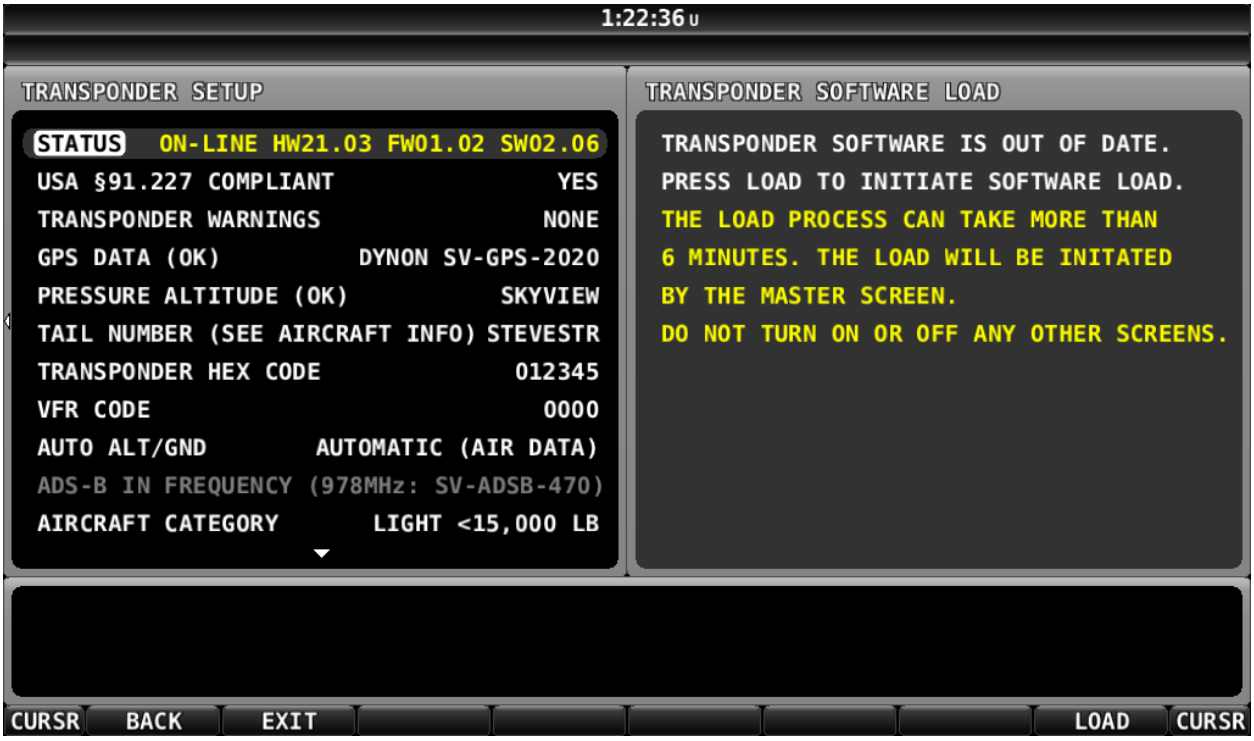

Figure 146 – SV-XPNDR-261/262 Software Update Ready to Load

After pushing the LOAD button, the screen in Figure 147 appears (below). This is to ensure that you intended to perform a Software update to the SV-XPNDR-261/262. Push the YES button.

It is critical not to interrupt the Software update process, thus you should ensure that there is adequate electrical power for the SkyView display(s) and the SV-XPNDR-261/262 to operate uninterrupted for at least 10 minutes.

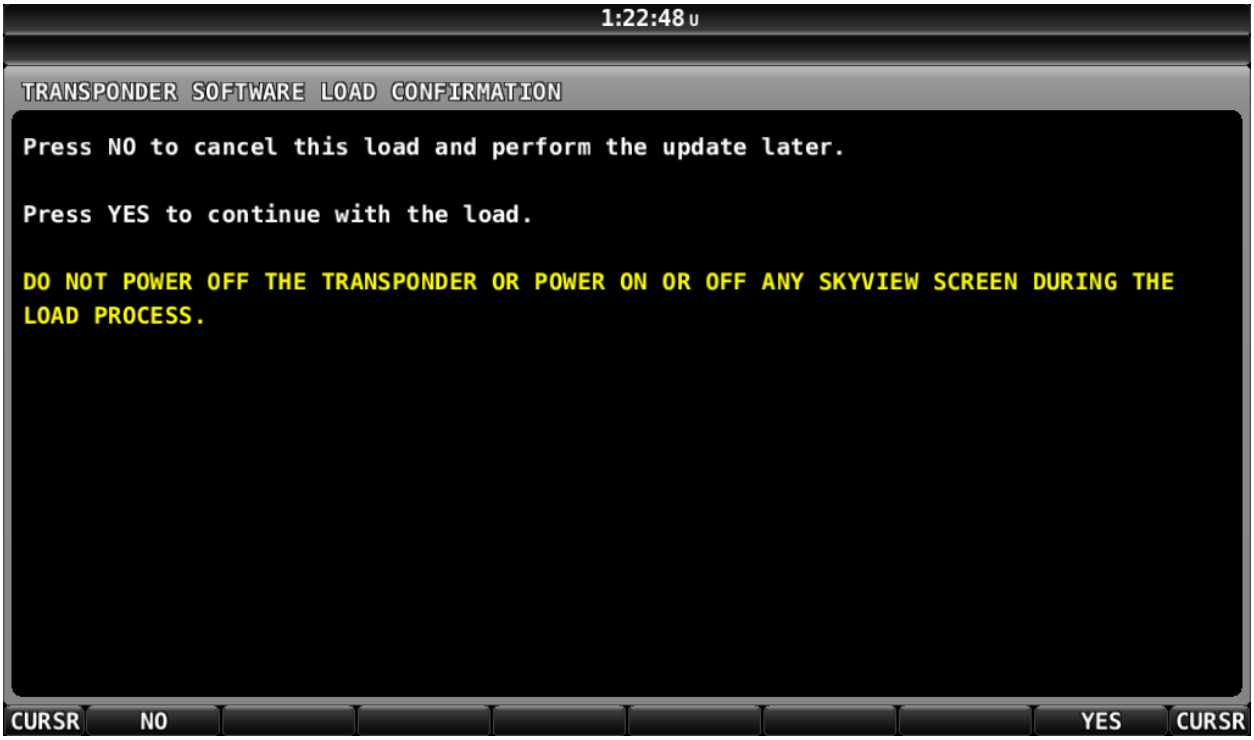

Figure 147 – SV-XPNDR-261/262 Software Update Confirmation Screen

Figure 148 below is the screen that appears after the Software update is complete. Once the Software update is complete, the SV-XPNDR-261/262 requires a power cycle to restart with the newer Software. Simply power down the SV-XPNDR-261/262, using the transponder switch, circuit breaker, etc. Or simply power off the MASTER or AVIONICS switch. A power-off of only a few seconds is required.

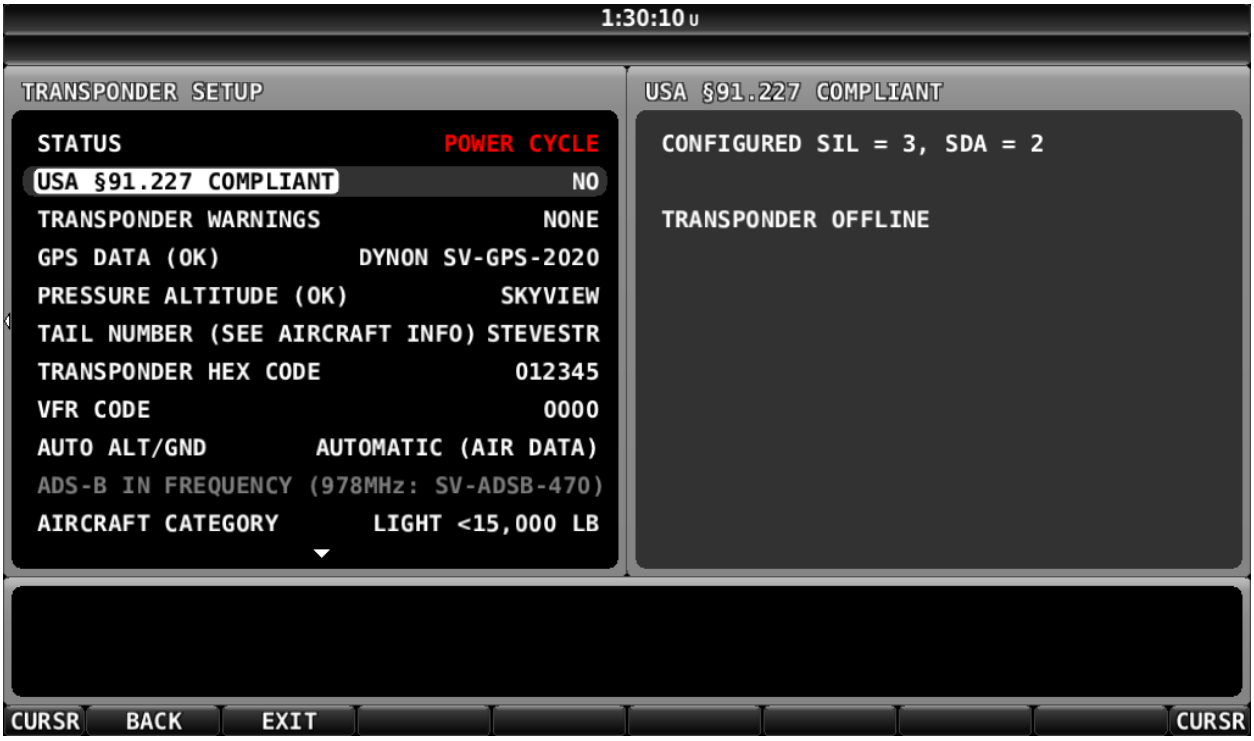

Figure 148 – SV-XPNDR-261/262 Software Update Complete

After power-cycling the SV-XPNDR-261/262, the STATUS changes as shown in Figure 149 below. The SV-XPNDR-261/262 is online, with the newer version of Software loaded.

Figure 149 – SV-XPNDR-261/262 Online with Updated Software (Normal Operation)

SV-XPNDR-261/262 Software Update SW02.09

SV-XPNDR-261/262 Software SW02.11 was included with SkyView Software v15.2.0 on 2016-06-13. SV-XPNDR-261/262s sold after that date may already have Software SW02.11 already installed. This new version of SV-XPNDR-261/262 Software includes:

- Revised speed thresholds for auto air/ground transitions for gliders.
- IDENT timer is now restarted each time the IDENT button is pressed.

SV-XPNDR-261/262 Software SW02.09 incorporates all previous Software changes (see notes from previous SV-XPNDR-261/262 Software updates below). You can update your SV-XPNDR-261/262 directly to SW02.09 from any previous version – "step-by-step" Software updates are not required.

SV-XPNDR-261/262 Software Update SW02.09

SV-XPNDR-261/262 Software SW02.09 was included with SkyView Software v14.2.1.3698 on 2016-04-12. SV-XPNDR-261/262s sold after that date may already have Software SW02.09 already installed. This new version of SV-XPNDR-261/262 Software includes:

- Fix for a bug that would cause some SkyView pilots to see FAA ADS-B 2020 Compliance Reports fail due to high count of out of range NIC and NACp values.

SV-XPNDR-261/262 Software SW02.09 incorporates all previous Software changes (see notes from previous SV-XPNDR-261/262 Software updates below). You can update your SV-XPNDR-261/262 directly to SW02.09 from any previous version – "step-by-step" Software updates are not required.

SV-XPNDR-261/262 Software Update SW02.11 Quick Decision Points

Transponder software version SW02.09 fixed an ADS-B Out issue that primarily affects customers in the US. Although SW02.11 does not fix any critical issues over SW02.09, it is the version included with SkyView software version 15.2.0

Not all SkyView pilots must, or should update their SV-XPNDR-261/262 Software to SW02.09 or later.

Dynon Avionics recommends that you *do* update your SV-XPNDR-261/262 Software to SW02.11 if any of the following points apply:

- If…
    - You are a US pilot, and
    - You have an SV-GPS-250 or SV-GPS-2020 receiver installed, and
    - You have an SV-ADSB-470/472 ADS-B In receiver installed, and
    - Your SV-XPNDR-261/262's Software is earlier than SW02.08
- Or, if you have a Garmin GNS, GTN or another approved GPS position source that is connected as your ADS-B Out position source (and your ADS-B Out transmitter is an SV-XPNDR-261/262), and the SV-XPNDR-261/262 Software is earlier than SW02.06.

It is generally not necessary to update your SV-XPNDR-261/262 to Software SW02.11 if:

- In the STATUS line, “SW02.09” (or later) is shown; Software SW02.09 is already installed on your SV-XPNDR-261/262, and none of the features in a subsequent version are pertinent to your installation.
- Or, if you are a non-US pilot, and you fly *only* outside the US, none of the FAA or ADS-B requirements or updates apply, thus you are not required to update your SV-XPNDR-261/262 Software.

Until your SV-XPNDR-261/262 is updated to v2.08 or later, a newly-installed SV-GPS-2020 will not function correctly.

Until your SV-XPNDR-261/262 is updated to v2.08 or later, a SkyView system with an SV-GPS-250 will be unable to transmit SIL/SDA=1 correctly. A minimum of SIL/SDA=1 is required by the US ADS-B system for the SkyView system to receive ADS-B traffic.

If a Software update for the SV-XPNDR-261/262 is available, but not installed, the SV-XPNDR-261/262 will continue to operate with no degradation of performance or annunciation of the available update during SkyView’s normal operation. However, the STATUS menu under SETUP MENU > TRANSPONDER SETUP will be highlighted in YELLOW to indicate that an optional update is available.

Deprecated SV-XPNDR-261/262 Software Update Instructions and notes

The instructions for earlier Software updates below are deprecated, retained in this manual for reference only. In 2016 and beyond, it is unlikely that that the situations, or SkyView Software versions, or SV-XPNDR-261/262 Software versions, are present in your aircraft. As explained above, SV-XPNDR-261/262 Software v02.09, which is included with SkyView Software v14.2 and later, incorporates all previous Software changes shown below.

If upgrading from a version of SkyView Software prior to v5.0, v5.0 and later contain a Software upgrade to the SV-XPNDR-261/262. This Software update adds the option to have the SV-XPNDR-261/262 automatically switch modes as the transition between ground operation and flight is detected.

This Software upgrade also updates the ADS-B out capability of the transponder to meet TSO-C166B for ADS-B Out functionality. This change **REQUIRES** that the physical transponder module be labeled to indicate the new TSO authorization. Failure to perform this physical modification at the same time as the Software update will result in a transponder which is likely not considered airworthy by aviation regulatory agencies.

SkyView Software v5.0 – v7.1 SV-XPNDR-261/262 Software SW02.02 Update

The optional SV-XPNDR-261/262 Software SW02.02 Software update that was contained within SkyView Software v5.0 through v7.1 updated the ADS-B out capability of the SV-XPNDR-261/262 so that it meets the latest TSO C166b. This TSO will be required by the FAA 2020 ADS-B Out mandate and other regulatory agencies around the world.

SV-XPNDR-261/262 Software update SW02.02 contained in SkyView Software v5.0 through v7.1 also enabled an AUTOMATIC option for the AUTO ALT/GND setting which allows the SV-XPNDR-261/262 to automatically determine whether the aircraft is in flight or not by using a combination of GPS and air data changes from SkyView.

Note that after the SV-XPNDR-261/262 SW02.02 Software update, only the SV-XPNDR-261 is capable of meeting the FAA 2020 ADS-B Out mandate, because of power transmission requirements that the FAA 2020 ADS-B Out mandate imposes. In other words, the SV-XPNDR-262, even if it is updated to this Software, cannot be used as part of equipping for the FAA 2020 ADS-B Out mandate.

SkyView Software v10.0 – v12.0 SV-XPNDR-261/262 Software SW02.04 Update

The optional SV-XPNDR-261/262 Software SW02.04 Software update that is contained within SkyView Software v10.0 through v12.0 fixes an issue that only pertains to some installations. It also includes the updates described above for SV-XPNDR-261/262 Software version SW02.02 update. If either of the following scenarios describes your installation, you should update your SV-XPNDR-261/262 to SW02.04 Software:

- If you have a Garmin GNS, GTN or similar IFR GPS that is directly connected to the SV-XPNDR-261/262 to provide a certified position source via Garmin's ADS-B format data output, you MUST update to version 2.04 or later.
- If you are in the US and are using a Dynon Avionics SV-XPNDR-261/262 plus SV-ADSB-470/472 module to receive both traffic and weather AND your SV-XPNDR-261/262 Software version is lower than SW02.02, you should update to version SW02.04 to update so that it meets the latest TSO C166b. If your SV-XPNDR-261/262 is not updated to the latest TSO, you will not receive a complete traffic portrait. This applies whether or not you are using a TSO'd GPS or SkyView's SV-GPS-250 as your ADS-B position source.

If your SV-XPNDR-261/262 has not been previously updated (such as if you are updating to SkyView Software v10.0 from a SkyView Software version that is earlier than v5.0, applying the SV-XPNDR-261/262 Software SW02.04 will update your SV-XPNDR-261/262 to the latest Software (it is not necessary to apply version SW02.02, and then version SW02.04). If you are updating your SV-XPNDR-261/262 for the first time, to Software version SW02.04, the labeling requirements below apply.

SkyView Software v12.2 – v13.0.3 SV-XPNDR-261/262 Software SW02.06 Update

The optional SV-XPNDR-261/262 Software update SW02.06 that is contained within SkyView Software v12.2 through v13.0.3 provides an update that only pertains to some installations. It also includes the updates described above for SV-XPNDR-261/262 Software version SW02.02 and Software version SW02.04. If either of the following scenarios describes your installation, you should update your SV-XPNDR-261/262 to version SW02.06 Software:

- If you have a Garmin GNS, GTN or similar IFR GPS that is directly connected to the SV-XPNDR-261/262 to provide a certified position source via Garmin's ADS-B format data output, you should update to version 2.06 or later and switch your GPS device to output ADS-B+ format for FAA 2020 ADS-B rule compliance. Note that your Garmin GPS may require a Software update to enable ADS-B+ format output.
- If you are in the US and are using an SV-XPNDR-261/262 plus SV-ADSB-470/472 module to receive both traffic and weather AND your SV-XPNDR-261/262 Software version is a lower number than 2.02, you should update to version 2.06 to update so that it meets the latest TSO C166b. If your SV-XPNDR-261/262 is not updated to the latest TSO, you will not receive a complete traffic portrait. This applies whether or not you are using a TSO'd GPS or SkyView as your ADS-B position source.

SV-XPNDR-261/262 Software v2.06 adds additional support for Garmin GNS, GTN or similar IFR GPS units that is directly connected to the SV-XPNDR-261/262 to provide a certified position source. Previously, the data format used to provide certified position source data from these GPS units was "ADS-B". The "ADS-B" format was found to have a technical error, which Garmin corrected by creating a new data format – "ADS-B+".

After updating your SV-XPNDR-261/262 to Software v2.06, on the Garmin GNS, GTN or similar IFR GPS:

1. Check SETUP MENU > TRANSPONDER SETUP. The line GPS DATA should read GPS DATA (OK) DIRECT (GARMIN ADS-B/ADS-B+)
2. On the Garmin GNS, GTN or similar IFR GPS, select the serial port connected to the SV-XPNDR-261/262, and change the data format from “ADS-B OUT” to “ADS-B+ OUT”.

If your SV-XPNDR-261/262 has not been previously updated (such as if you are updating to SkyView Software v12.2 from a SkyView Software version that is earlier than v5.0, applying the SV-XPNDR-261/262 version 2.06 update will update your SV-XPNDR-261/262 to the latest Software (it is not necessary to apply version 2.02, and then version 2.04).

SV-XPNDR-261/262 Software Version (SW) v2.02/v2.04/v2.06 Labeling Requirements (US Registered / Operated Aircraft Only)

This section applies to aircraft operated or registered in the US only.

In the US, updating your SV-XPNDR-261/262 Software from a SW version earlier than v2.02 **REQUIRES** that the physical transponder module be labeled to indicate the new TSO authorization. Failure to perform this physical modification at the same time as the Software update will result in a transponder that is not considered airworthy by the FAA. If your SV-XPNDR-261/262 shipped with v2.02 (or higher), it will already have the correct label.

Applicability/Compliance

If your SV-XPNDR-261/262 shipped from Dynon Avionics after September 2012, it likely shipped with Software version 2.02 (or higher) and is already labeled with its TSO C166b appropriately. However, this is not authoritative.

To determine whether your SV-XPNDR-261/262 has an optional Software update available for it, which will require that it be labeled should you choose to update it:

1. Go to SETUP MENU > TRANSPONDER SETUP > (right click). If the STATUS line is yellow, there is a Software update available for your SV-XPNDR-261/262.
2. Examine the STATUS line. Example:
   ON LINE HW 22.03 FW 01.02 SW 02.02
   The Software version of the SV-XPNDR-261/262 follows the SW; in the example above the Software version is 2.02 (and thus, will be highlighted in yellow).
3. If STATUS is highlighted in yellow, *and* the version is *earlier* than 2.02, *and* you choose to update your SV-XPNDR-261/262, the new TSO authorization label must be applied concurrent with updating the Software. Go to
   www.dynonavionics.com/transponder (PDF)
   which provides a new TSO authorization label that you can print out, cut out, and apply to your SV-XPNDR-261/262.
4. Only after you have the label available, go to
   SETUP MENU > TRANSPONDER SETUP > STATUS, press the LOAD button
   and follow the instructions to update the Software.

5. You must apply the new TSO authorization label before the SV-XPNDR-261/262's next use:
    a. Cut out the label that is included in the printout from www.dynonavionics.com/transponder (PDF).
    b. Permanently affix the label to your physical SV-XPNDR-261/262 module. **Do not cover any existing labels.**
    c. Ensure that the method that you use to secure the label is durable. For example, fully covering the label with transparent packing tape would satisfy this requirement.

SkyView Software v14.0 – v14.1 SV-XPNDR-261/262 Software Update SW02.08

A SV-XPNDR-261/262 Software update – v02.08, is included in SkyView Software updates v14.0 and v14.1. This version of SV-XPNDR-261/262 Software includes:

- Fix for a minor bug
- Support for the SV-GPS-2020
- Support for the SV-GPS-250 to transmit SIL/SDA=1

Until your SV-XPNDR-261/262 is updated to v2.08, the SV-GPS-2020 will not function correctly, nor will the SV-GPS-250 be able to transmit SIL/SDA=1 correctly.

SV-XPNDR-261/262 Software v02.08 incorporates all previous Software changes (see notes from previous SV-XPNDR-261/262 Software updates below). You can update your SV-XPNDR-261/262 directly to v2.08 from any previous version – "step-by-step" Software updates are not required.

- If, in the STATUS line, "SW02.08" (or later) is shown, your SV-XPNDR-261/262 already has the latest Software – no update is required.

SV-XPNDR-261/262 Software Update SW02.08 Quick Decision Points

Not all SkyView pilots must, or should update their SV-XPNDR-261/262 Software if a Software update is available on their SkyView system.

- If, in the STATUS line, "SW02.08" (or later) is shown, your SV-XPNDR-261/262 already has the latest Software – no update is required.
- If you have installed, or will soon install, the Dynon Avionics SV-GPS-2020 GPS Antenna/Receiver Module (High Integrity GPS - meets FAA 2020 ADS-B Out requirements), you should update your SV-XPNDR-261/262 Software.
- If you are a US pilot, have an SV-GPS-250 GPS receiver installed, do not have (or do not intend to install for some time) an SV-GPS-2020 GPS Antenna/Receiver Module (High Integrity GPS - meets FAA 2020 ADS-B Out requirements), have an SV-ADSB-470/472 ADS-B In receiver installed, you should update your SX-XPNDR-261/262's Software.
- If you have a Garmin GNS, GTN or another certified GPS that is directly connected to the SV-XPNDR-261/262 to provide a certified position source, and your Software version is shown as *earlier than* SW02.06, you should update your SV-XPNDR-261/262's Software.

- If you are a non-US pilot, and you fly *only* outside the US, none of the FAA or ADS-B requirements or updates apply, thus you are not required to update your SV-XPNDR-261/262 Software.

If a Software update for the SV-XPNDR-261/262 is available, the SV-XPNDR-261/262 will continue to operate with no degradation of performance or annunciation of the available update during SkyView's normal operation. However, the STATUS menu under SETUP MENU > TRANSPONDER SETUP will be highlighted in yellow to indicate that an optional update is available.

SV-XPNDR-261/262 Post Installation Checks

If an SV-XPNDR-261/262 is newly-installed (has never flown), aviation authorities typically require that, prior to first flight, a newly-installed transponder be tested for proper operation (and pass).

Aviation authorities also typically require that a transponder be re-tested after any significant maintenance involving the transponder system (including the antenna), and also tested periodically (even if no maintenance has occurred). For US pilots, transponders must be tested every 24 months – reference FAR 91.413 (other sections, other regulations may apply).

It is the pilot's / aircraft owner's responsibility to ensure that the transponder has been initially, and periodically, tested per (and met) the requirements of your country's aviation authority.

Post installation checks should be carried out in accordance with your certification requirements. These checks should include:

- Mode S interrogations to verify correct address programming.
- Verification of the reported altitude using a static tester.
- Where installed, verification of correct squat switch ground/airborne indications. In an aircraft with a squat switch, setting the Mode switch to ALT when the aircraft is on the ground should leave the SV-XPNDR-261/262 in GND mode; when the aircraft becomes airborne, the mode should switch automatically to ALT.
- Interrogations to verify the receiver sensitivity. A Mode S transponder should have a minimum triggering level (MTL) of between -77 dBm and -71 dBm. Failure to meet this requirement usually indicates antenna or coaxial cable problems.
- Interrogations to verify the transmitted power. A Class 1 installation should have no less than 125 Watts at the antenna (and no more than 500 Watts). A Class 2 installation should have no less than 71 Watts at the antenna (and no more than 500 Watts). Failure to meet this requirement is also generally due to antenna or wiring issues.
- Where installed, verification of the GPS position source and ADS-B outputs. Whenever a valid position is received by the transponder and the transponder is in any mode other than Standby, ADS-B Extended Squitter should be observed on the transponder test set.
- Ensure all regulatory requirements are met. In the United States, the transponder must be

tested and inspected per FAR 91.413.

Transponder Warnings (Transponder Self Diagnostics)

The SV-XPNDR-261/262 includes limited self-diagnostic capability. If a SV-XPNDR-261/262 fault is detected, a system message will be displayed: XPNDR WARNING MESSAGE. To see the detailed information on the fault, go to SETUP MENU > TRANSPONDER SETUP. The words TRANSPONDER WARNING will be displayed in Yellow; right-click the knob see the specific warning. Table 80 below provides a recommendation for each specific warning.

Message	Message Explanation	Recommendation
ANT FAULT (value)	Antenna Fault; value is Power output.	Generally, this is an installation issue with antenna, feedline, or the connector. Check the antenna, feedline, or connector. A visual inspection is often not sufficient to find the fault with the antenna, feedline, or connector.
NO ADSB POSITION	GPS data is not being received by transponder.	Check connection to GPS receiver or transponder configuration.
DPSK UNLOCK	Internal diagnostic warning.	Internal fault, contact Dynon Avionics Technical Support to arrange for repair or replacement.
REMOTE HOT (value)	Transponder is receiving excessive heat; value is Temperature (°C).	Check location of transponder for exposure to excessive heat.
RX PSU FAIL	Internal diagnostic warning.	Internal fault, contact Dynon Avionics Technical Support to arrange for repair or replacement.
SQUITTER FAIL	Extended Squitter data not transmitted.	Internal fault, contact Dynon Avionics Technical Support to arrange for repair or replacement.
TX POWER LOW (value)	Transmit power output is low; value is Power output.	Generally, this is an installation issue with antenna, feedline, or the connector. Check the antenna, feedline, or

Message	Message Explanation	Recommendation
		connector. A visual inspection is often not sufficient to find the fault with the antenna, feedline, or connector.
TX PSU HIGH (value)	Transmitter power supply output is abnormally high; value is Volts.	Internal fault, contact Dynon Avionics Technical Support to arrange for repair or replacement.
TX PSU LOW (value)	Transmitter power supply output is abnormally low; value is Volts.	Check power being supplied to SV-XPNDR-261/262.
TX RESTART	Internal diagnostic warning	Remove and re-apply power to transponder.
TXPNDR FAULT	Generic fault message	Internal fault, contact Dynon Avionics Technical Support to arrange for repair or replacement.

Table 80 – SV-XPNDR-261/262 Self Diagnostic Messages

Performing Transponder Checks

Manipulating Altitude

If the test on your transponder requires manipulating the static pressure, be sure to manipulate static pressure only after activating SkyView's pitot/static test mode. Instructions for using this mode are in chapter 5 of this manual. Pitot/static test mode is accessed via SETUP MENU > HARDWARE CALIBRATION

Manual ALT / GND mode switching

Transponder checks require manual switching to ALT and GND mode.

A Dynon Avionics SV-XPNDR-261/262 is normally configured to automatically switch between GND and ALT mode based on airspeed and other parameters – SETUP MENU > TRANSPONDER SETUP > AUTO ALT/GND > AUTOMATIC (AIR DATA). In this mode, in the XPNDR menu, the GND button does not appear, and the ALT button will not change mode unless you are in flight.

Note that some aircraft may be equipped with a squat switch for transponder mode control; before changing AUTO ALT/GND, record which squat switch configuration is set; you will need this information to restore AUTO ALT/GND to this setting after transponder testing is complete.

To be able to manually switch the SV-XPNDR-261/262 between ALT and GND mode, you must temporarily reconfigure the transponder: SETUP MENU > TRANSPONDER SETUP > AUTO ALT/GND > NONE > EXIT (button).

The SV-XNDR-261/262 can now be manually switched to ALT and GND modes: XPNDR > ALT and XPNDR > GND.

After transponder testing is complete, remember to return the transponder to its normal configuration: (typically) SETUP MENU > TRANSPONDER SETUP > AUTO ALT/GND > AUTOMATIC (AIR DATA) or the squat switch configuration as previously recorded.

Dynon Avionics SV-GPS-250 and SV-GPS-2020 Compliance Statements

Use of Dynon Avionics SV-GPS-250 as a GPS Position Source for US ADS-B Out at SIL/SDA=1

Prior to early 2016, a SkyView system using an SV-GPS-250 as the GPS position source for ADS-B Out transmitted a SIL and SDA of 0.

Beginning in 2016, a SIL and SDA of 1 is required by the FAA for the ADS-B infrastructure to transmit ADS-B traffic data to individual aircraft.

Dynon Avionics has conducted a rigorous analysis of the service history and field use of the SV-GPS-250 and the SkyView system as a whole. This analysis supports the use of the Dynon Avionics SV-GPS-250 as an ADS-B Position Source with a SIL/SDA level of 1. Dynon Avionics implemented the change of SIL/SDA of 1 from SIL/SDA of 0 in January, 2016, as part of SkyView Software version 14.0.

Dynon Avionics has sufficient operating history as a company to demonstrate that any issues which may arise can be tracked, responded to, and resolved in an acceptable timeframe to maintain an acceptable safety level in the ADS-B environment as a SIL/SDA=1 device.

Figure 151 – SV-GPS-250 SIL/SDA=1 Compliance Statement

Use of Dynon Avionics SV-GPS-2020 as a GPS Position Source for US ADS-B Out

A SkyView system equipped with an SV-GPS-2020 as a position source and an SV-XPNDR-261 as the ADS-B transmitter meets the minimum performance requirements in 14 CFR § 91.227 for operation in the airspaces as defined by 14 CFR § 91.225 when installed and configured per the instructions in this document.

Figure 150 – SV-GPS-2020 14 CFR § 91.227 Compliance Statement

12. SV-ARINC-429 Installation and Configuration

SkyView SE does not integrate with any IFR navigation sources, and excludes features and components commonly used in an aircraft equipped for IFR flight, including the SV-ARINC-429. If you intend to install and use SkyView SE, do not purchase or install an SV-ARINC-429.

SkyView can connect to advanced GPS/NAV devices like the Garmin GNS 430/530 and similar Via the SV-ARINC-429 module.

Figure 152 is a high-level overview of a suggested and installation and configuration procedure for the SV-ARINC-429.

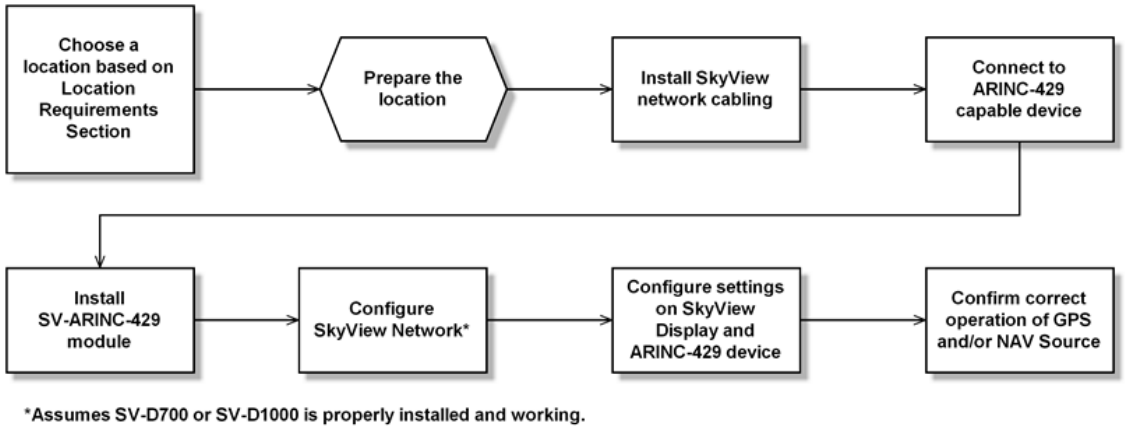

Figure 152 – Suggested SV-ARINC-429 Installation and Configuration Procedure

Physical Installation

Observe the following guidelines when choosing a location for the SV-ARINC-429 module:

- Avoid locations that are subject to severe vibration.
- Avoid locations that are subject to extreme humidity.
- Leave ample working room for electrical connections.
- SkyView systems support one or two SV-ARINC-429 per network.
- A common location for the SV-ARINC-429 is behind the instrument panel, keeping it close to the display and associated ARINC-429 capable device.

The diagram below shows the important mounting dimensions of the SV-ARINC-429 module with electronic connections.

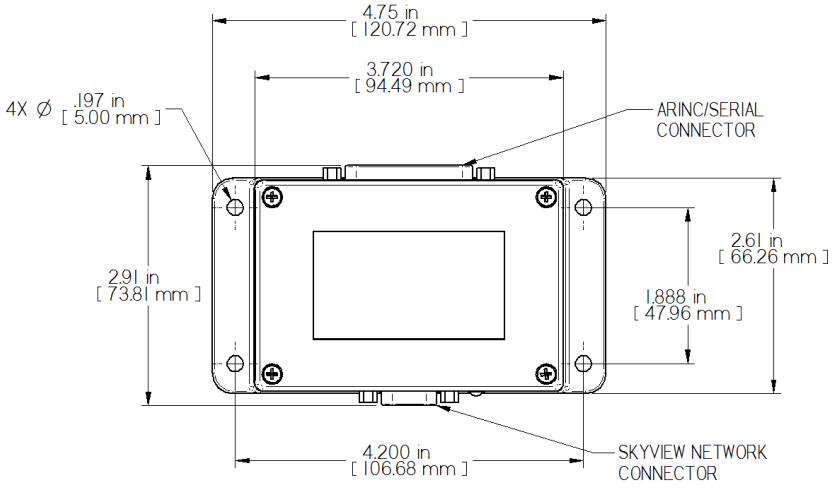

Figure 153 – SV-ARINC-429 Mounting Dimensions with Electrical Connections

The SV-ARINC-429 does not provide mounting hardware. The mounting tabs on each side of the module have holes sized for #10 fasteners, but it is up to the installer to decide how the SV-ARINC-429 will be secured to the aircraft.

Follow recommended torque practices when tightening the mounting hardware. *Do not rivet the SV-ARINC-429 to the aircraft as this will hinder future removal if necessary.*

SkyView Network Connection

Connect the SV-ARINC-429 module to the SkyView network using the hardware mentioned in the SkyView System Construction Section or using equivalent hardware.

If you have to install a connector on the end of a network cable, insert all pins into the D9 connector. Refer to Appendix C: Wiring and Electrical Connections for details on connector pinouts and wire colors.

Remember to configure the network as described in the Network Setup and Status section after connecting all modules to a display.

ARINC-429 Device Connection

Harness Construction

Because the SV-ARINC-429 can be connected to a variety of devices, the harness requirements will vary from airplane to airplane. Therefore, Dynon Avionics does not supply pre-manufactured harnesses for the SV-ARINC-429 module. Instead, your SV-ARINC-429 shipped with enough connectors and pins to generate a wide variety of harness configurations. Refer to the sections below for detailed wiring information.

If you do not own a DSUB machined-pin crimping tool, they can be obtained from many electronics or avionics dealers. You may also find it helpful to own a pin insertion/extraction tool as well.

Additional harness construction and wiring information can be found in Appendix C: Wiring and Electrical Connections.

The SV-ARINC-429 has a single D25F connector which is used for all data connections to your compatible ARINC-429 device. The pin out depicted in Figure 154 below depicts the view from the rear of your D25M connector – the view you will have of your harness connector as you are inserting pins into the harness. Note that the pin numbers are labelled on the face of both the female and male connector.

SV-ARINC-429 Pinout

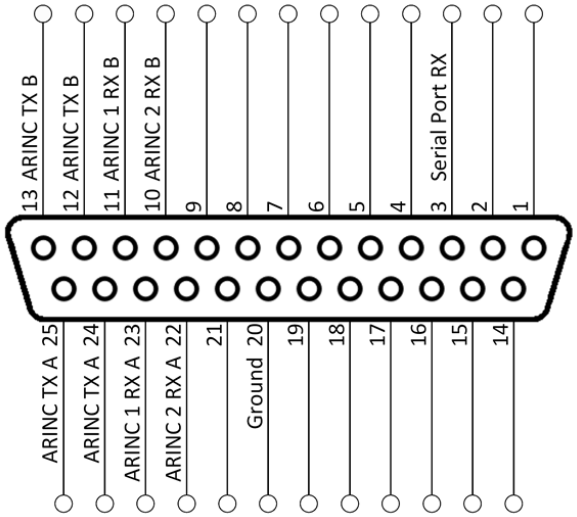

Figure 154 – SV-ARINC-429 D25M Pin Insertion View (Rear)

Pin	Function	Notes
1	No Connect	-
2	No Connect	-
3	Serial RX	Aviation Format Only from Connected ARINC-429 GPS
4	No Connect	-
5	No Connect	-
6	No Connect	-
7	No Connect	-
8	No Connect	-
9	No Connect	-
10	ARINC 2 RX B	-
11	ARINC 1 RX B	-
12	ARINC TX B	Pins 12/13 are the same TX signal. Provided for convenience when connecting to multiple ARINC receivers.
13	ARINC TX B	Pins 12/13 are the same TX signal. Provided for convenience when connecting multiple ARINC receivers.
14	No Connect	-
15	No Connect	-
16	No Connect	-
17	No Connect	-
18	No Connect	-
19	No Connect	-
20	Ground	-
21	No Connect	-
22	ARINC 2 RX A	-
23	ARINC 1 RX A	-
24	ARINC TX A	Pins 24/25 are the same TX signal. Provided for convenience when connecting multiple ARINC receivers.
25	ARINC TX A	Pins 24/25 are the same TX signal. Provided for convenience when connecting multiple ARINC receivers.

Table 81 – SV-ARINC-429 Pinout

ARINC Device Connections

The SV-ARINC-429 has two ARINC-429 receivers and one transmitter. The single transmitter may be connected to multiple devices that can accept the ARINC-429 information that SkyView transmits.

The SV-ARINC-429 also has a serial input that is designed to provide auxiliary information that ARINC-429 GPS outputs do not provide (such as altitude). SkyView needs this data to consider the input a valid and complete GPS position source. This input is not a general purpose serial port, and cannot be configured for other uses. Input coming into this serial port is assumed to be in Aviation format, which most ARINC-429 capable panel mount GPS units can output.

The following several diagrams show some common radios and GPSs, and the preferred connection schemes between them and the SV-ARINC-429.

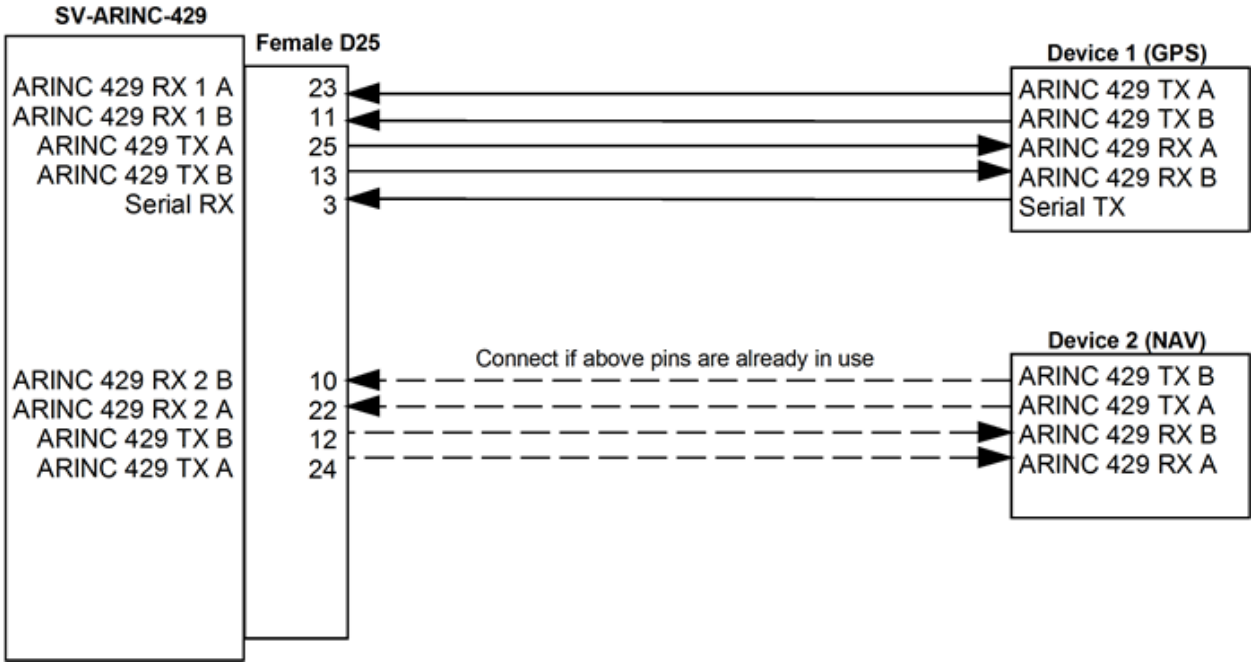

Figure 155 – Generic SV-ARINC-429 Connections

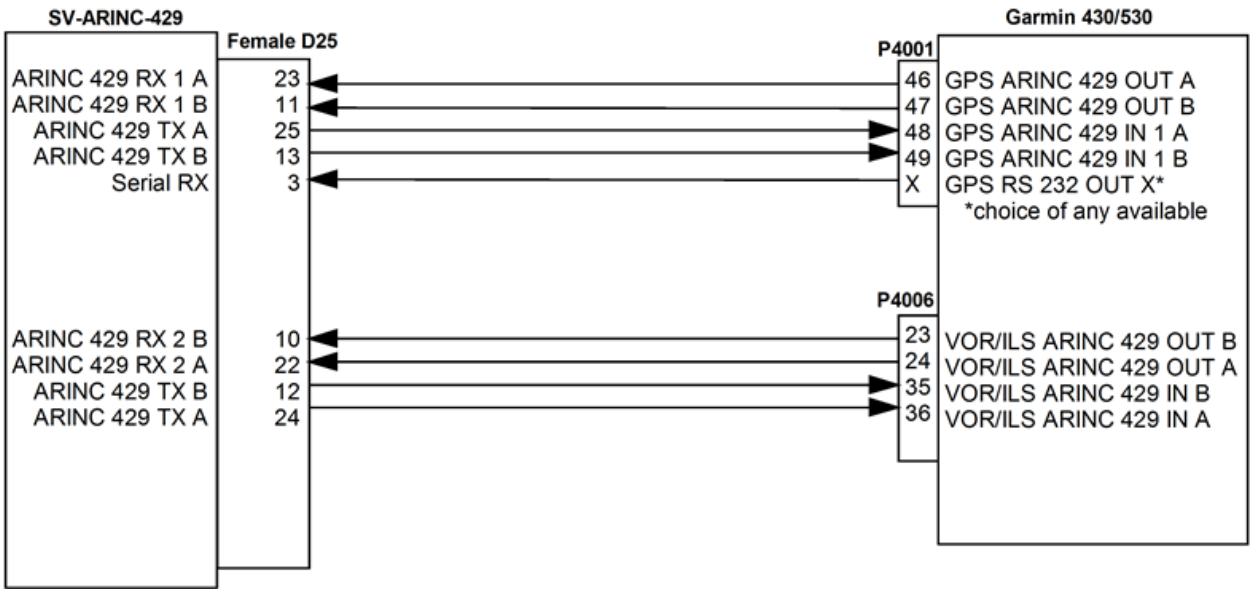

Figure 156 – Garmin 430/530 SV-ARINC-429 Connections

Additional Garmin 430/530 Configuration Information

The following are the typical Garmin and SkyView configuration settings when this combination of products is used:

Garmin Settings

"Main ARINC 429 Config" page

In 1: High | EFIS / Airdata
In 2: Unused by SkyView, configure as needed for other equipment
Out: High | GAMA GRAPHICS 429
SDI: Common
VNAV: Enable Labels

"VOR / LOC / GS ARINC 429 Config" Page

TX: High
RX: High
SDI: Common
DME: Unused by SkyView

“MAIN RS232 CONFIG” Page

Chan X (where X is the physically connected port) Output: Aviation

Optional (ADS-B)

If a Dynon Avionics SV-XPNDR-261 is being used for ADS-B Out capability: Another 430/530 serial output should be set to “ADS-B+ OUT” format. That serial port should be connected to the SV-XPNDR-261’s pin 3 through a 1.21k resistor as described in the SV-XPNDR-261/262 Installation and Configuration. Finally, set SETUP > TRANSPONDER SETUP > GPS DATA to DIRECT (GARMIN ADS-B/GARMIN ADS-B+).

SkyView Settings

SETUP MENU > SYSTEM SETUP > ARINC-429:
(Configure MODULE 1 and MODULE 2 independently)
> INPUT SPEED: HIGH
> INPUT 1: GPS x
> NAVIGATION SOURCE DISP NAME: (user selectable, 7 characters. The name entered here is displayed as the HSI source and the Flight Plan Source (if this device outputs a flight plan).
> INPUT 2: NAV x
> NAVIGATION SOURCE DISP NAME: (user selectable, 7 characters. The name entered here is displayed as the HSI source and the Flight Plan Source (if this device outputs a flight plan).
> OUTPUT SPEED: HIGH
> ALLOW AUTO SWITCH: YES (LABEL 100P)

Setting ALLOW AUTO SWITCH: to YES (LABEL 100P) (which is the default, including after upgrading Software to v10.0 or later) allows the 430/530 to tell SkyView to switch from GPS to ILS or back when on an ILS overlay approach - SkyView will display whatever mode the 430/530 tells SkyView to be in. When in this mode and not on an approach, switching between the NAV function and GPS function must be performed from the 430/530.

If you want to manually select GPS and NAV from the 430/530, as you have done prior to v10.0, SETUP MENU > SYSTEM SETUP > ARINC-429 > ALLOW AUTO SWITCH: NO.

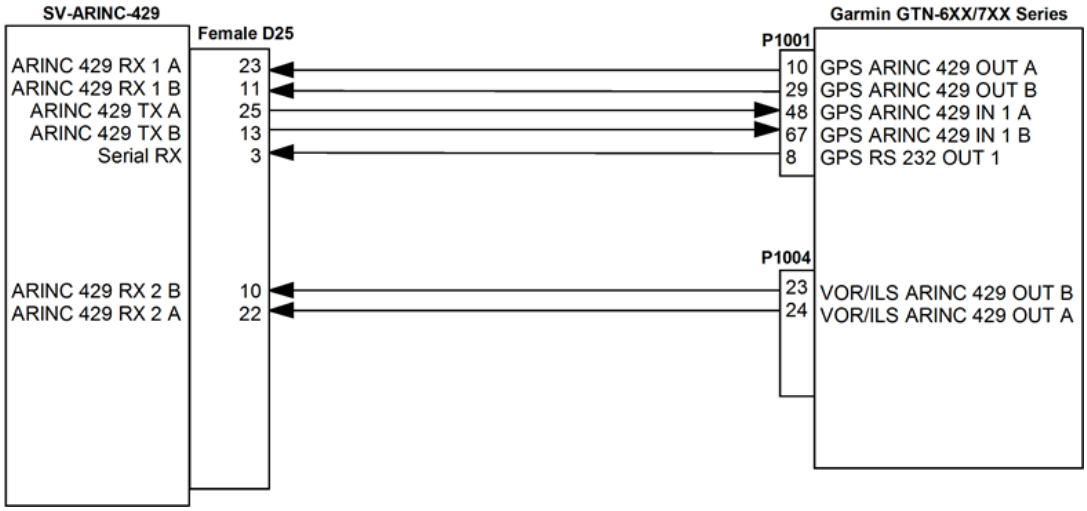

Figure 157 – Garmin GTN Series SV-ARINC-429 Connections

Additional Garmin GTN Series Configuration Information

The following are the typical Garmin and SkyView configuration settings when this combination of products is used:

Garmin Settings

"ARINC 429 Configuration" page

In 1: High | EFIS Format 2
In 2: Unused by SkyView, configure as needed for other equipment

Out: High | GAMA Format 2
SDI: Common

"VOR/LOC/GS Configuration Page

Nav Radio: Enabled
ARINC 429 Configuration:
TX Speed: High
SDI: Common
Other Settings: Unused by SkyView

“RS-232 Configuration” Page

RS232 1 Output: Aviation Output 1

Optional (ADS-B)

If a Dynon Avionics SV-XPNDR-261 is being used for ADS-B Out capability: Another GTN serial output should be set to “ADS-B+ OUT” format. That serial port should be connected to the SV-XPNDR-261’s pin 3 through a 1.21k resistor as described in SV-XPNDR-261/262 Installation and Configuration. Finally, set SETUP > TRANSPONDER SETUP > GPS DATA to DIRECT (GARMIN ADS-B/ADS-B+).

SkyView Settings

SETUP MENU > SYSTEM SETUP > ARINC-429:
(Configure MODULE 1 and MODULE 2 independently)
> INPUT SPEED: HIGH
> INPUT 1: GPS X
> NAVIGATION SOURCE DISP NAME: (user selectable, 7 characters. The name entered here is displayed as the HSI source and the Flight Plan Source (if this device outputs a flight plan).
> INPUT 2: NAV X
> NAVIGATION SOURCE DISP NAME: (user selectable, 7 characters. The name entered here is displayed as the HSI source and the Flight Plan Source (if this device outputs a flight plan).
> OUTPUT SPEED: HIGH
> ALLOW AUTO SWITCH: YES (LABEL 100P)

Setting ALLOW AUTO SWITCH: to YES (LABEL 100P) (which is the default, including after upgrading Software to v10.0 or later) allows the GTN to tell SkyView to switch from GPS to ILS or back when on an ILS overlay approach - SkyView will display whatever mode the GTN tells SkyView to be in. When in this mode and not on an approach, switching between the NAV function and GPS function must be performed from the GTN.

If you want to manually select GPS and NAV from the GTN, as you have done prior to v10.0, SETUP MENU > SYSTEM SETUP > ARINC-429 > ALLOW AUTO SWITCH: NO.

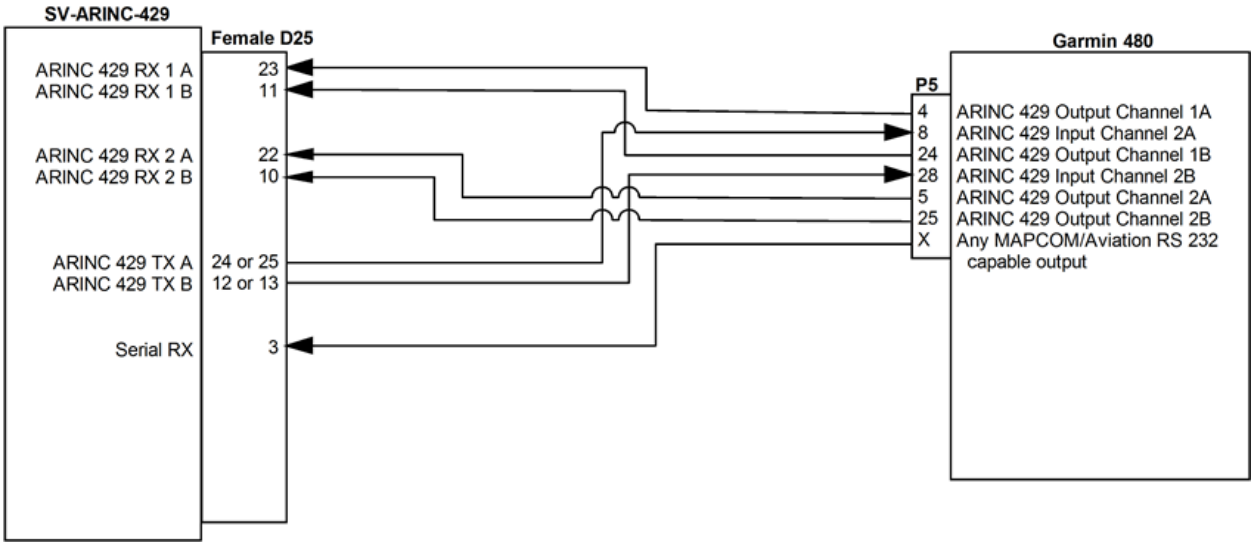

Figure 158 – Garmin 480 SV-ARINC-429 Connections

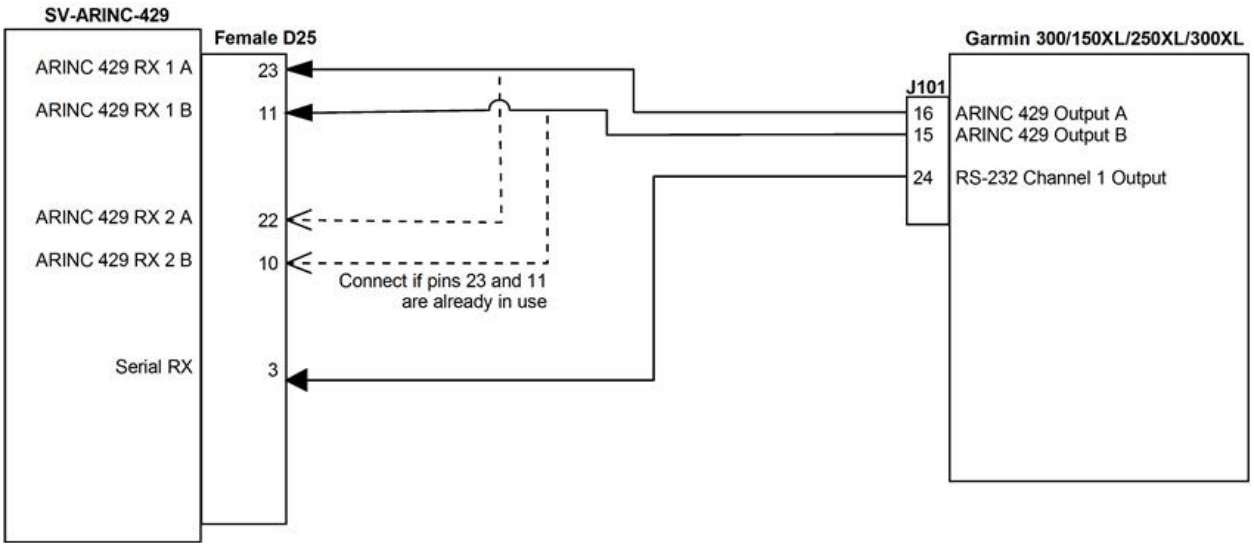

Figure 159 – Garmin 300/150XL/250XL/300XL SV-ARINC-429 Connections

SV-ARINC-429 Related Settings

Go to the ARINC-429 SETUP under SETUP MENU > SYSTEM SETUP > ARINC-429.

SkyView supports up to two SV-ARINC-429 modules, but since most aircraft will only have one installed, the "MODULE 2" section is normally disabled. If your aircraft does actually have two SV-ARINC-429 modules, note that the serial numbers of each module are provided so you can determine which module is which.

For each module, Set INPUT1 to the type of device connected to the SV-ARINC-429's ARINC-429 RX 1 A and B inputs, any of GPS 1, 2, 3, 4 or NAV 1, 2, 3, 4. Optionally, you can specify a "friendly" name for each navigation source using the NAVIGATION SOURCE DISP NAME and specifying up to 7 characters. Examples include "430NAV", and "430GPS". If a NAVIGATION SOURCE DISP NAME is specified, that will be displayed on the HSI. If NAVIGATION SOURCE DISP NAME is not specified, GPS 1,2,3,4 / NAV 1, 2, 3, 4 will be displayed in the info item next to the HSI. For IFR GPS navigators, particularly the Garmin GNS and GTN series, it is also used to describe the device at the top of the Flight Plan window. Note that any GPS/NAV slots that are highlighted in red are already being used for other devices. Also note that though POS X is a possible setting, it should generally not be used for ARINC devices.

Next set the INPUT SPEED parameter (HIGH or LOW), based on the output speed of your two ARINC devices.

The SV-ARINC-429 has one ARINC output channel with 2 sets of pins on the connector for wiring convenience. If one or both of your ARINC devices can accept commands, configure OUTPUT SPEED appropriately.

If you have connected a device to ARINC-429 RX 2 A and B, repeat the above configuration for the INPUT2 parameter; otherwise, leave it set to NONE.

ALLOW AUTO SWITCH: YES (LABEL 100P) / NO: If set to YES (LABEL 100P), SkyView will automatically change whether data from INPUT1 or INPUT2 will be displayed.

- If the source transmits the "100P" label (such as Garmin 430/530/GTN series), SkyView will automatically switch inputs per the label. This allows the inputs to be remotely switched by data from the source, either when the CDI is changed, or automatic transition on approach.
- If data is being transmitted to INPUT1, but no data is being transmitted to INPUT2, INPUT1 will be displayed.
- If data is being transmitted to INPUT2, but no data is being transmitted to INPUT1, INPUT2 will be displayed.

Your ARINC-429 capable GPS and/or NAV will need to be configured appropriately as well.

Go to SETUP MENU > MAP SETUP and select TIE FLIGHT PLAN SRC TO HSI NAV SRC to select whether you want the flight plan source to be independent from the HSI navigation source.

13. Vertical Power VP-X Integration and Configuration

SkyView can interface with the Vertical Power VP-X System to provide robust monitoring and control of your electrical system via your SkyView system. In order to use this feature, you must purchase and install a SV-VPX-290 VP-X License.

For full VP-X functionality, VP-X requires information from the EMS. VP-X information is displayed in the EMS window. Thus, if an SV-EMS-220 or SV-EMS-221 is not installed in your SkyView Classic system, VP-X information cannot be displayed.

VP-X Physical, Electrical Installation and Configuration

In planning your SkyView system with VP-X, note that to monitor the status of, and reset, a VP-X circuit, at least one SkyView display must be powered up for VP-X status to be displayed. Thus, it can be problematic to troubleshoot a VP-X issue if power to all SkyView displays is controlled by the VP-X.

To ensure that you can monitor the status of the VP-X, and reset VP-X circuits, it is recommended to power at least one SkyView display from a power source other than the VP-X unit.

Alternatively, you can equip at least one (preferably all) SkyView display(s) with an SV-BAT-320 backup battery. With an SV-BAT-320, a SkyView display can be powered up on backup battery power by pushing and holding Button 1. As soon as ship's power is received by the SkyView display, SkyView will switch to ship's power.

Refer to VP-X manufacturer's installation documentation for instructions on the physical and electrical installation of the VP-X unit, connection of electrical circuits to the VP-X, and configuration of the VP-X. Documentation for the VP-X unit can be found at http://verticalpower.com/documents/.

SkyView modules such as the SV-ADAHRS-200/201, SV-EMS-220/221, and SV-ARINC-429 receive power via the SkyView Network. Their power supplies are managed entirely by the SV-D700, SV-D1000, or SV-D1000T displays, and cannot be separately monitored by the VP-X system. However, SkyView components that have power supplied by aircraft power, such as the AP servos, SV-ADSB-470/472, SV-COM-C25/X83, SV-XPNDR-261/262, and Heated AOA/Pitot Probe can have their power monitored by the VP-X by routing the power connections for those components via the VP-X.

The SV-HARNESS-D37 harness for each SkyView display contains a twisted pair of Red (power) wires and a twisted pair of Black (ground) wires. The pair of wires are a *single* power input, and a *single* ground connection, and must be connected to a single VP-X input when using the VP-X to provide power to SkyView displays. The dual wiring scheme is needed to provide adequate power to the SkyView displays given the electrical constraints of the particular wires and DSUB connectors / pins used. These wires should not be sent to separate power channels or be considered redundant power sources.

Serial Port Connection

All communication between the VP-X system and the SkyView system is accomplished via a single bidirectional RS-232 serial connection.

Table 82 shows the connections for each of a SkyView display's nominally available serial ports (serial port 5 is usually used for connection to the SV-GPS-250/2020 module). Only ONE of the following serial ports will be used.

Serial Port	SkyView Classic Display D37	VP-X
1	Pin 3 (RX) Brown/Violet	J1 Pin 20 (TX)
	Pin 4 (TX) Brown/Orange	J1 Pin 22 (RX)
2	Pin 5 (RX) Yellow/Violet	J1 Pin 20 (TX)
	Pin 6 (TX) Yellow/Orange	J1 Pin 22 (RX)
3	Pin 7 (RX) Green/Violet	J1 Pin 20 (TX)
	Pin 8 (TX) Green/Orange	J1 Pin 22 (RX)
4	Pin 9 (RX) Blue/Violet	J1 Pin 20 (TX)
	Pin 10 (TX) Blue/Orange	J1 Pin 22 (RX)

Table 82 – SkyView Classic / VP-X Serial Port Connections

Record the SkyView display serial port which you connected the VP-X –you will need that information to configure SkyView to communicate with the VP-X.

Note that if you have more than one SkyView display, the same connections must be made to both / all SkyView displays.

To ensure reliable serial communications between the VP-X and SkyView, connect a wire from VP-X Connector J1, Pin 21 to the same grounding point used by SkyView display's 37-pin connector, Pin 21 and Pin 22 (twisted Black wires).

License Information

VP-X features are enabled on your SkyView system by purchasing and installing an SV-VPX-290 VP-X License. Only **one** SV-VPX-290 VP-X License is needed in a SkyView system, no matter how many displays are attached. That license is applied to only one display, but that display stores the license information for the entire system. In normal use, license information is shared with all displays connected via SkyView Network to allow the VP-X features to be operated on any display in the system.

Checking License Status

To check whether a SkyView system is licensed to use the VP-X Software features, go to SETUP MENU > LOCAL DISPLAY SETUP > LICENSE, and look at the status of the Vertical Power line. Possible license statuses include:

- LICENSED (THIS DISPLAY): A SV-VPX-290 VP-X License has been installed, enabling the use of VP-X features. This SkyView display stores the license information and also allows other displays in the aircraft to access the VP-X features.
- LICENSED - CONNECTED DISPLAY ONLINE: The SkyView system is licensed to use the VP-X features. This SkyView display is currently connected to a licensed display.
- LICENSED DISPLAY OFFLINE - XX HOURS REMAIN The SkyView system is licensed to use the VP-X features. However, the SkyView display that actually stores the license information is not currently connected. When this happens, the VP-X features will continue to be accessible for 30 flight hours beyond when the SkyView display that actually stores the license information was last connected to the SkyView system. Once the SkyView display that actually stores the license information is reconnected, this timer is cleared.
- NO LICENSE: None of the SkyView displays in the SkyView system have a SV-VPX-290 License installed.

Purchasing and Installing a SV-VPX-290 License

Display of, and control of, VP-X is not supported in SkyView SE. If you intend to install and use SkyView SE, do not purchase and install a VP-X or an SV-VPX-290 software license.

An SV-VPX-290 License can be purchased and applied to your system in one of two ways:

1. Call Dynon Avionics directly at 425-402-0433 with your SkyView display model (SV-D700, SV-D1000(T), SV-HDX800 or SV-HDX1100) and serial number (as displayed on the case sticker, or in SETUP MENU > LOCAL DISPLAY SETUP > DISPLAY HARDWARE INFORMATION). An SV-VPX-290 License is can be purchased for the entire aircraft you wish to enable the VP-X features on. This six-character License Code is then entered in SETUP MENU > LOCAL DISPLAY SETUP > LICENSE > LICENSE CODE. If you have more than one display in the aircraft, choose one to install it onto and provide information for only that display. Once any display is licensed, all connected displays in the Aircraft can use the VP-X features.
2. An SV-VPX-290 VP-X License may be purchased from Dynon Avionics or any authorized Dynon Avionics dealer. This certificate can be redeemed for a license code that can be

entered in SETUP MENU > LOCAL DISPLAY SETUP > LICENSE > LICENSE CODE. To redeem a certificate simply follow the instructions on the certificate itself. Similar to the above, you will need to redeem your certificate by visiting http://license.dynonavionics.com with your SkyView display model and serial number ready. Alternatively, you can call Dynon Avionics directly at 425-402-0433 to redeem a certificate.

VP-X SkyView Display Settings

Serial Port Setup

Before the VP-X SETUP menu can be accessed, the SkyView system must be licensed to use the VP-X features. See the section above for how to obtain and install a SV-VPX-290 license.

To configure your SkyView displays' serial ports to work with the VP-X:

- Go to SETUP MENU > SYSTEM SETUP > SERIAL PORT SETUP.
- Navigate to the serial port that you physically connected the VP=X module to in the previous steps.
- Select VP-X. Note that other fields are automatically configured and cannot be changed. Press ACCEPT.
- Exit SETUP. Repeat on any other displays on your SkyView system.

VP-X Settings

Most VP-X setup – such as setting circuit breaker limits - is NOT done via SkyView, but instead via a Windows-based application called VP-X Configurator. See your VP-X documentation for full VP-X installation and setup information.

Though the VP-X's trim and flaps calibrations are not used by SkyView, leaving any of the VP-X trim or flaps end points or neutral positions to "0" in the VP-X Configuration program will cause SkyView's trim or flaps indications to not display properly. To avoid this, set all of the trim and flaps end points and neutral points to "1" in the VP-X Configurator.

The VP-X settings in the SETUP MENU > VP-X SETUP menu mainly concern how information from the VP-X is displayed in SkyView:

- MAIN BATTERY WARNINGS: Sets the main battery voltage levels at which caution and warning indications are provided visually on the VP-X page.
- AUX BATTERY WARNINGS: Sets the auxiliary battery voltage levels at which caution and warning indications are provided visually on the VP-X page. If you do not have an auxiliary aircraft battery (note that this is NOT the SkyView SV-BAT-320) installed, this setting can be ignored.

- SYSTEM AMPS: Sets the current levels for the entire electrical system at which caution and warning indications are provided visually on the VP-X page.
- ALTERNATOR AMPS: Sets the current levels for the alternator at which caution and warning indications are provided visually on the VP-X page.
- BATTERY AMPS: Sets the discharge rate at which caution and warning indications are provided visually on the VP-X page.
- SKYVIEW AMPS SHUNT LOCATION: Depending on your electrical layout, your SkyView shunt may be in one of a few places in your electrical system.
- AILERON TRIM POSITION / ELEVATOR TRIM POSITION / FLAP POSITION: Set to SKYVIEW EMS if your trim and/or flaps position signal input is routed to your SV-EMS-220/221 module, or to VP-X if it is connected to your VP-X system instead. If set to VP-X, the engine page trim and/or flaps widgets will be sourced from the VP-X position information. Note that even when using the VP-X as your trim and/or flaps position source, you do still need to perform the SkyView-based calibration routine for the trim information to display properly in SkyView. These calibrations can be found under SETUP MENU > HARDWARE CALIBRATION > EMS CALIBRATION. You do not need to perform that VP-X Configurator-based calibration. However, set all of the points in the VP-X Configurator to “1”.
- To display a battery voltage widget that displays battery voltage connected to the VP-X, go to SETUP MENU > EMS SETUP > SCREEN LAYOUT EDITOR > (xx % PAGE) > SENSOR (button) > BATT VOLTS (VP-X) > ACCEPT (button) > STYLE (per your preference) > SIZE (per your preference) > SAVE (button).

Post Installation Checks

- Follow all installation, configuration, and test procedures as instructed by the VP-X documentation.
- Ensure that your VP-X system is powered on and functioning normally.
- On a SkyView display that is displaying the Engine Page (enabled by toggling MENU > SCREEN > EMS PG), press to MENU > ENGINE > VP-X. The Engine page will automatically re-arrange itself to show VP-X information as seen in the image below. If the VP-X page is covered by a red “X”, the VP-X is either not communicating with SkyView, is not properly configured, or is inoperative.

Figure 160 – VP-X Example (SkyView Classic Only)

14. SV-ADSB-470/472 Installation and Configuration

Display of MAP is not supported in SkyView SE. Thus, ADS-B weather data and ADS-B traffic data cannot be displayed (on the MAP) in SkyView SE. If you intend to install and use SkyView SE, do not purchase or install an SV-ADSB-470/472.

SkyView can receive traffic and weather via the SV-ADSB-470 UAT Band Traffic and Weather Receiver or the SV-ADSB-472 Dual Band ADS-B Traffic and Weather Receiver. The SV-ADSB-470/472 is a remote mounted module that connects to SkyView via a serial port on your SkyView display(s). It also requires the installation of a dedicated antenna for ADS-B signal reception.

A map license is required to display ADS-B traffic and weather data received from the SV-ADSB-470/472.

The SV-ADSB-470/472 receives weather via the 978 MHz UAT ADS-B frequencies, which are only utilized in the US. Therefore, weather are only available in the US. Dynon Avionics does not recommend the use of the SV-ADSB-470 outside the US. However, the SV-ADSB-472 does show 1090 MHz ADS-B traffic from other ADS-B equipped aircraft outside the US.

Although weather and TFR information (FIS-B services) available any time the SV-ADSB-470/472 is in an ADS-B ground station coverage area, ADS-R TIS-B traffic is only available if a SV-XPNDR-261/262 with ADS-B OUT capability is installed and is providing ADS-B OUT position reports into the ADS-B system.

To enable ADS-B Traffic information on the SV-ADSB-470/472 with an ADS-B OUT device other than the Dynon Avionics SV-XPNDR-261/262:

1. SETUP MENU > SYSTEM SETUP > AIRCRAFT INFORMATION >TAIL NUMBER> (enter the TAIL NUMBER assigned to your aircraft) > ACCEPT (button). This will automatically set the HEX CODE and the HEX CODE in your TRANSPONDER SETUP MENU.
2. SETUP MENU > SYSTEM SETUP > TRAFFIC SETUP > NON-DYNON ADS-B OUT ONBOARD > YES

Only ADS-B OUT devices that comply with TSO C166b or later of the ADS-B spec will allow traffic to be displayed properly. The ADS-B OUT device must be set up to tell the ADS-B system that the aircraft is receiving on 978 MHz.

Figure 161 has a high-level overview of a suggested SV-ADSB-470/472 installation, configuration, and testing procedures:

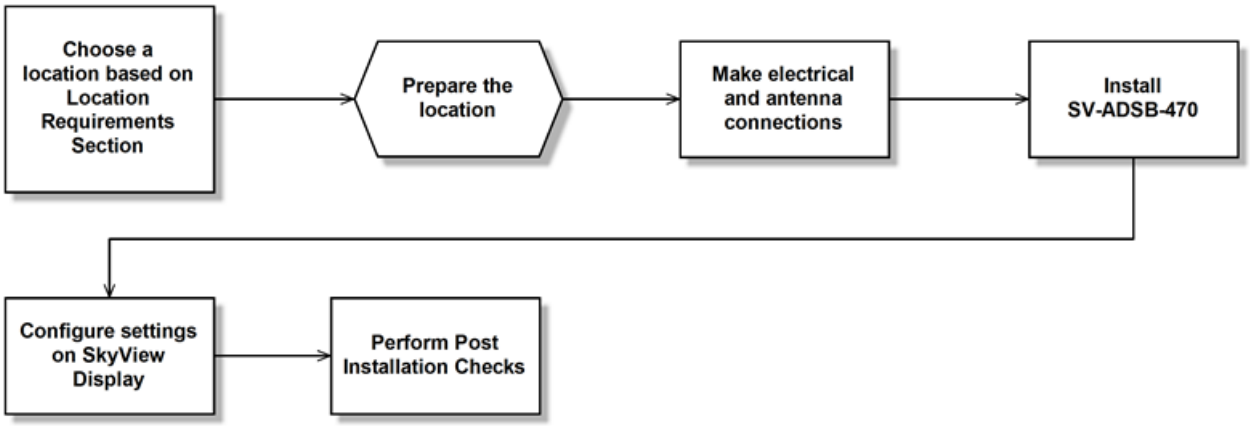

Figure 161 – Suggested SV-ADSB-470/472 Installation and Configuration Procedure

Upgrading from SV-ADSB-470 to SV-ADSB-472

- The SV-ADSB-472 is pin-compatible with the SV-ADSB-470. Simply move the DB9 and BNC connectors and the electrical hook-up is complete.
- The connectors are in different locations so an extender cable might be useful in situations that do not have enough service loop. It is preferable to extend the serial connection rather than the BNC cable for optimum sensitivity and range.
- Once mounted and wired, be sure to update the serial settings: SETUP MENU > SYSTEM SETUP > SERIAL PORT SETUP > SERIAL PORT x SETUP (the serial port you wired the SV-ADSB-472 to) > SERIAL IN DEVICE > SV-ADSB-472 > ACCEPT (button).

Physical Installation

The SV-ADSB-470/472 is designed to be mounted in any convenient location in the cockpit, the cabin, or an avionics bay.

The following guidelines should be followed, remembering to allow adequate space for installation of cables and connectors.

- Select a position in the aircraft that is not too close to any high external heat source. (The SV-ADSB-470/472 is not a significant heat source itself and does not need to be kept away from other devices for this reason).
- Avoid sharp bends and placing the cables too near to the aircraft control cables.
- Avoid locations that are subject to severe vibration.
- Avoid locations that are subject to extreme humidity.
- Leave ample working room for electrical connections.

SV-ADSB-470/472 Dimensions and Connections

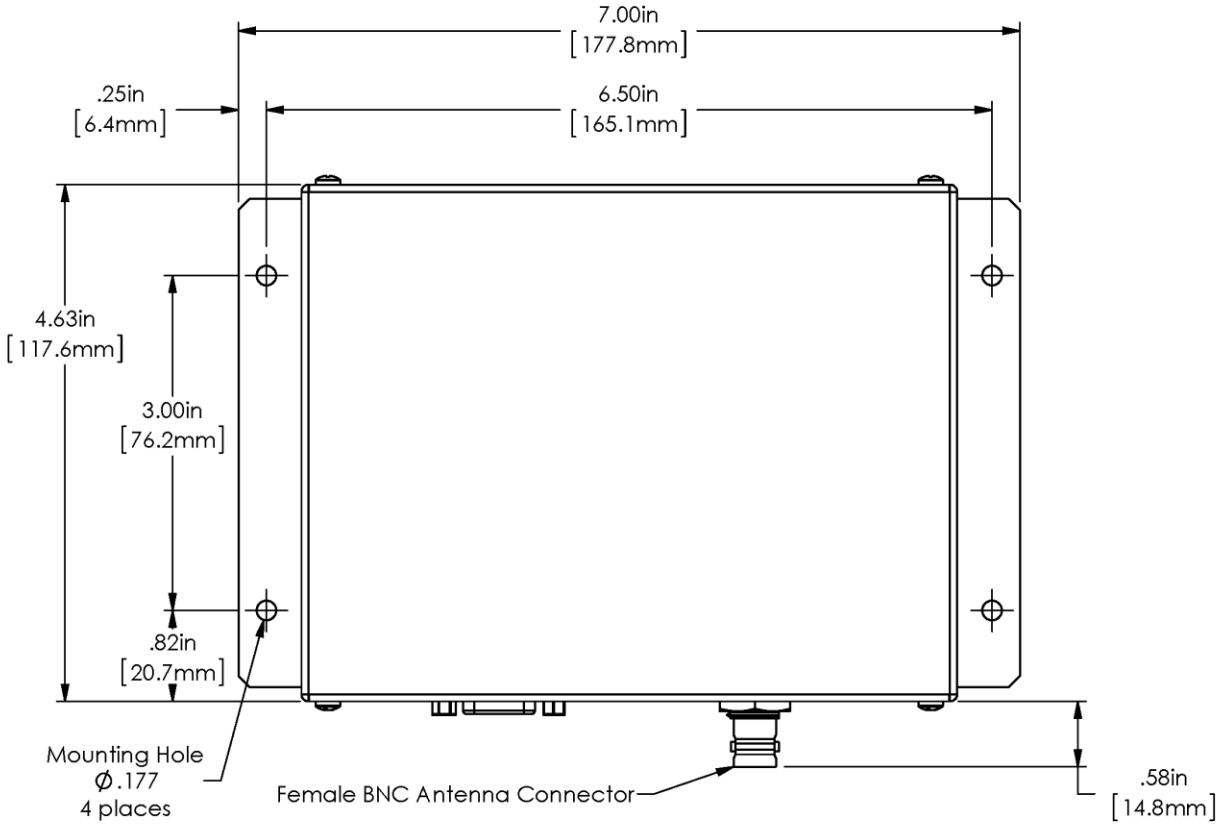

Figure 162 – SV-ADSB-470 Dimensions (top view)

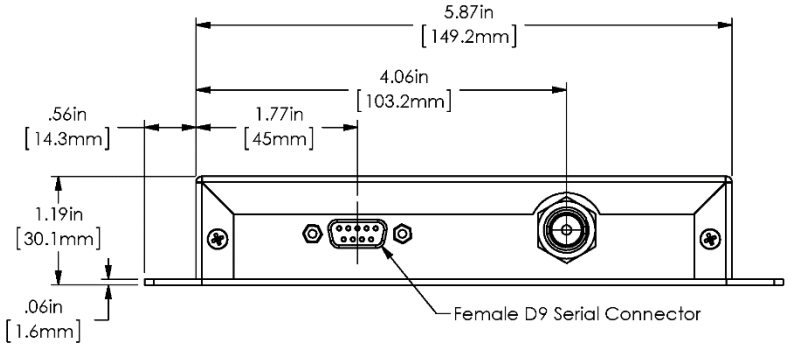

Figure 163 – SV-ADSB-470 Dimensions/Connections (front view)

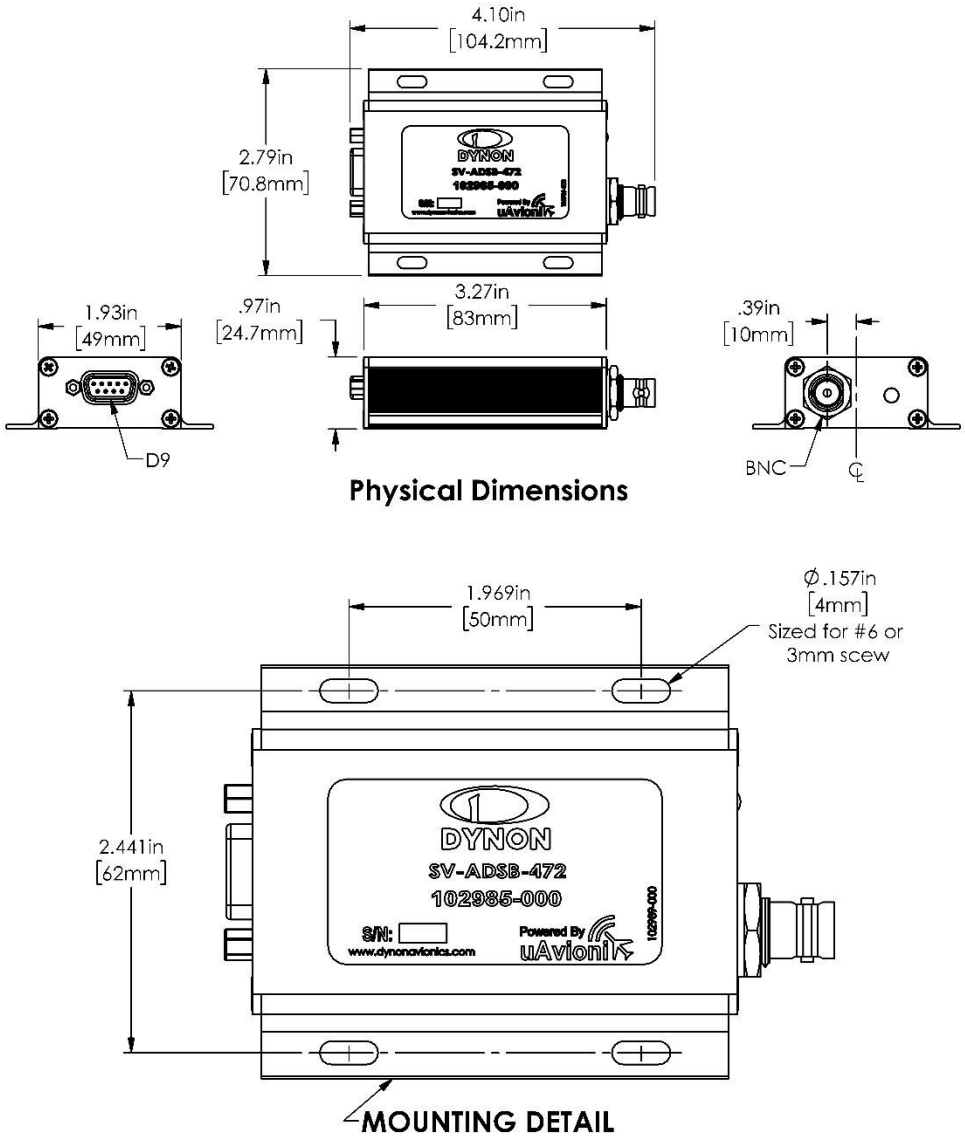

Figure 164 – SV-ADSB-472 Dimensions/Connections

Installation Instructions

The SV-ADSB-470/472 is designed to be mounted in any convenient location in the cockpit, the cabin, or an avionics bay.

The following installation procedure should be followed, remembering to allow adequate space for installation of cables and connectors.

- Select a position in the aircraft that is not too close to any high external heat source. (The SV-ADSB-470/472 is not a significant heat source itself and does not need to be kept away from other devices for this reason).

- Avoid sharp bends and placing the cables too near to the aircraft control cables.
- Secure the SV-ADSB-470/472 to the aircraft using its four (4) mounting holes. The device should be mounted to a flat surface. The mounting tabs on each side of the module have holes sized for #8-32 fasteners, but it is up to the installer to decide how the module will be secured to the aircraft.

Additional items you will require, but which are not in the SV-ADSB-470/472 package, include:

- SV-HARNESS-ADSB (or equivalent harness assembled by installer)
- Antenna and fixing hardware. Antenna selection suggestions are available in the following section.
- Antenna cable and BNC Male connector. You need to supply and fabricate all required antenna cables (or provided as part of your ADS-B antenna). Guidance on cable types is given below.
- Mounting hardware: To secure the SV-ADSB-470/472 to the aircraft.

Electrical Installation

For connecting the SV-ADSB-470/472 to your SkyView system, Dynon Avionics offers the optional SV-HARNESS-ADSB harness (pictured at right). This harness is not included with the SV-ADSB-470/472. It comes with 15 feet of wire, and the connector is pre-wired. If required, the harness can be shortened, or lengthened (length is not critical). Table 83 – SV-HARNESS-ADSB (below) reflects the wiring colors of the SV-HARNESS-ADSB.

Figure 165 – SV-HARNESS-ADSB

Additional harness construction and wiring information can be found in Appendix C: Wiring and Electrical Connections.

The SV-ADSB-470/472 has a single D9F connector which provides the data and power inputs to the module. A single BNC connector attaches to the antenna.

SV-HARNESS-ADSB – Pinout (D9F on module / D9M on harness)

Pin	Color	Function	Notes
1	Red	10-30V DC	Connect to Aircraft Power
2	Orange	SV-ADSB-470/472 Serial RX	Data Input from SkyView Display(s): Serial 1 – Pin 4 (Brown / Orange), or Serial 2 – Pin 6 (Yellow / Orange), or Serial 3 – Pin 8 (Green / Orange), or Serial 4 – Pin 10 (Blue / Orange)
3	Violet	SV-ADSB-470/472 Serial TX	Data Output to SkyView Display(s): Serial 1 – Pin 3 (Brown / Violet), or Serial 2 – Pin 5 (Yellow / Violet), or Serial 3 – Pin 7 (Green / Violet), or Serial 4 – Pin 9 (Blue / Violet)
4	Black	Ground	Connect to Aircraft Ground
5	N/A	Reserved	Do not connect
6	N/A	Reserved	Do not connect
7	N/A	Reserved	Do not connect
8	N/A	Reserved	Do not connect
9	N/A	Reserved	Do not connect

Table 83 – SV-HARNESS-ADSB Wiring

The pin out depicted in Figure 166 below depicts the view from the rear of your D9M connector – the view you will have of your harness connector as you are inserting pins into the harness. Note that the pin numbers are labelled on the face of both the female and male connector.

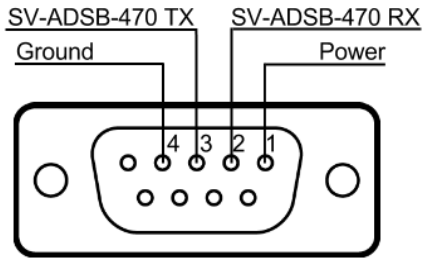

Figure 166 – SV-ADSB-470/472 Connector Diagram (From Rear of D9M Connector on the SV-ADSB-HARNESS)

The following table shows the connections for each of SkyView's nominally available serial ports (serial port 5 is usually used for connection to the SV-GPS-250/2020 module). Only ONE of the following serial ports will be used:

Serial Port	SkyView D37	SV-ADSB-470/472 D9
1	Pin 3 (RX) Brown/Violet	Pin 3 (TX)
	Pin 4 (TX) Brown/Orange	Pin 2 (RX)
2	Pin 5 (RX) Yellow/Violet	Pin 3 (TX)
	Pin 6 (TX) Yellow/Orange	Pin 2 (RX)
3	Pin 7 (RX) Green/Violet	Pin 3 (TX)
	Pin 8 (TX) Green/Orange	Pin 2 (RX)
4	Pin 9 (RX) Blue/Violet	Pin 3 (TX)
	Pin 10 (TX) Blue/Orange	Pin 2 (RX)

Table 84 – Example SkyView/SV-ADSB-470/472 Serial Port Connections

Power/Ground Input

The SV-ADSB-470/472 can be powered by 10-30 Volts DC. 22 AWG wire is sufficient for wire runs up to 50' for this application. Note that the SV-ADSB-470/472 must be connected to aircraft power – none of SkyView's voltage outputs can provide a sufficient amount of power to power the SV-ADSB-470/472.

Power Specifications	Approximate current consumption at 12 volts DC	Approximate current consumption at 24 volts DC
SV-ADSB-470	0.2 amps	0.1 amps
SV-ADSB-472	0.1 amps	0.05 amps

Table 85 – SV-XPNDR-261/262 Power Consumption

Serial RX/TX

All communication between the SV-ADSB-470/472 module and SkyView is accomplished via a single bidirectional serial connection. To accomplish this:

- Choose an unused serial port on each display to connect the SV-ADSB-470/472 to. Note that both the TX and RX sides of the serial port are needed, and both the RX and TX lines must be connected to all displays in parallel. The same numerical serial port must be used on each display.
- Connect the SV-ADSB-470/472 TX wire (pin 3) to the SkyView serial RX of your choosing. If you have multiple displays, the SV-ADSB-470/472 TX wire must be connected to the same serial RX wire on each display.
- Connect the SV-ADSB-470/472 RX wire (pin 2) to the SkyView serial TX of your choosing. If you have multiple displays, the SV-ADSB-470/472 RX wire must be connected to the same serial TX wire on each display.

- Record the SkyView serial port that you have chosen on each display as you will need to configure it later for use with the SV-ADSB-470/472.

The SV-ADSB-470/472 communicates with the SkyView system using serial ports, not SkyView Network. Thus, the SV-ADSB-470/472 will not be listed as a device in the list of SkyView Network devices (such as SV-ADAHRS-200/201, SV-EMS-220/221, etc.) This is normal.

Antenna Selection and Installation

Dynon Avionics offers a 978 MHz Rod type antenna suitable for use with the SV-ADSB-470/472 – P/N 102607-000. The 978 MHz Rod type antenna is supplied with a BNC connector. Dynon Avionics does not supply coaxial cables for this antenna.

Figure 167 - Dynon Avionics 978 MHz Antenna

The length of the Dynon Avionics 978 Rod type antenna on the fuselage of the aircraft, base and whip, is 2.653 inches.

The SV-ADSB-470/472 requires its own antenna; it cannot share the SV-XPNDR-261/262's antenna. The selected antenna should be installed according to the manufacturer's instructions. A UAT-specific antenna or a SV-XPNDR-261/262 antenna may be used with the SV-ADSB-470/472. Antennas available include (but are not limited to):

- UAT Antennas
  - Delta Pop (non-TSO):
    - http://www.deltapopaviation.com/UAT_Antenna.html
  - Rami AV-74 (TSO'd):
    - http://www.rami.com/product-view.php?pid=24
- Use of transponder antennas: Because the SV-ADSB-470/472 is receive-only, and the transponder frequency is "close" in frequency, any antenna suitable for use with a 1090 MHz transponder will work with the SV-ADSB-470/472. Again, an antenna cannot be shared with a 1090 MHz transponder (SV-XPNDR-261/262) and an ADS-B Receiver (SV-ADSB-470/472).

The following considerations should be taken into account when siting the antenna:

- The antenna should be well removed from any projections, the engine(s) and propeller(s). It should also be well removed from landing gear doors, access doors or others openings which will break the ground plane for the antenna.
- The antenna should be mounted on the bottom surface of the aircraft and in a vertical position when the aircraft is in level flight.
- Where practical, plan the antenna location to keep the cable lengths as short as possible

and avoid sharp bends in the cable to minimize the VSWR (voltage standing wave ratio).

- The SV-ADSB-470/472 antenna should not be installed within 2 feet (24 inches) of a 1090 MHz transponder (including the SV-XPNDR-261/262) antenna.

Antenna Ground Plane

When a conventional aircraft monopole antenna is used it relies on a ground plane for correct behaviour. For ideal performance the ground plane should be very large compared to the wavelength of reception, which is 305 mm. In a metal skinned aircraft this is usually easy to accomplish, but is more difficult in a composite or fabric skinned aircraft. In such cases, a metallic ground plane should be fabricated and fitted under the antenna.

As the ground plane is made smaller, the actual dimensions of the ground plane become more critical, and small multiples of the wavelength should be avoided, as should circles. Rectangles or squares are much less likely to create a critical dimension that resonates with the transmissions. The smallest practical ground plane is a square around 130 mm per side; as the size increases the performance may actually get worse, but will be better by the time the ground plane is 780 mm on each side. Anything much larger than that size is unlikely to show significant further improvement.

The thickness of the material used to construct the ground plane is not critical, providing it is sufficiently conductive. A variety of proprietary mesh and grid solutions are available. Heavyweight cooking foil meets the technical requirements, but obviously needs to be properly supported.

Antenna Cable

An acceptable cable:

- Has less than 3.0 dB loss for the run length needed. For runs less than 17 feet, RG58 is acceptable.
- Has a characteristic impedance of 50 Ω (50 Ohms).
- If running the antenna cable in a bundle with or in close proximity to the SV-XPNDR-261/262 antenna cable:
    - Has double braid screens or has a foil and braid screen. For runs less than 17 feet, RG400 is acceptable.

When routing the cable, ensure that you:

- Route the cable away from sources of heat.
- Route the cable away from potential interference sources such as ignition wiring, 400Hz generators, fluorescent lighting and electric motors.
- Keep the cable run as short as possible.
- Avoid routing the cable around tight bends.

- Avoid kinking the cable even temporarily during installation.
- Secure the cable so that it cannot interfere with other systems.

Antenna BNC Female Connector

This section describes the technique for attaching the antenna cable to a BNC Male connector. A BNC Male connector is not supplied with the SV-ADSB-470/472. The SV-ADSB-470/472 has a BNC Female connection. Therefore, you will need to source a BNC Male connector that is compatible with the antenna cable type that meets your aircraft's needs.

A dual crimp style BNC connector can be completed using a wide range of commercial crimp tools (for example the Tyco 5-1814800-3). The die apertures for the inner pin and the outer shield should be approximately 1.72 mm and 5.41 mm respectively.

- Strip back the coax cable to the dimensions in the table, as shown in the diagram below. Slide 25 mm (1 inch) of heat shrink tubing over the cable.
- Slide the outer crimp sleeve over the cable – it must go on before securing the center contact.

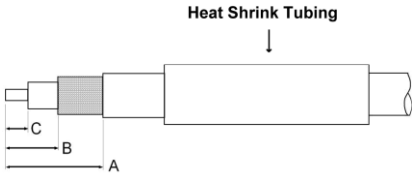

Dimension	Cut size (mm)	Cut size (inches)
A	17.5	0.69
B	7.2	0.28
C	4.8	0.19

- Crimp the center contact to the cable.
- Insert the cable into the connector – the center contact should click into place in the body, the inner shield should be inside the body of the connector and the outer shield should be outside the body.
- Crimp the outer sleeve over the shield.

Slide heat shrink tubing forward (flush to connector) and heat to shrink the tubing.

SV-ADSB-470 ~~Related~~Related SkyView Display Settings

Before the ADS-B STATUS menu can be accessed, the SV-ADSB-470 needs to be configured on the SkyView system:

SETUP MENU > SYSTEM SETUP > SERIAL PORT SETUP > SERIAL PORT x SETUP (the serial port you wired the SV-ADSB-470/472 to) > SERIAL IN DEVICE > SV-ADSB-470 > ACCEPT (button).

SETUP MENU > TRAFFIC SETUP > SHOW TAIL NUMBERS > YES > ACCEPT (button).

SV-ADSB-472 ~~Related~~Related SkyView Display Settings

Before the ADS-B STATUS menu can be accessed, the SV-ADSB-472 needs to be configured on the SkyView system:

SETUP MENU > SYSTEM SETUP > SERIAL PORT SETUP > SERIAL PORT x SETUP (the serial port you wired the SV-ADSB-472 to) > SERIAL IN DEVICE > SV-ADSB-472 > ACCEPT (button).

SETUP MENU > TRAFFIC SETUP > SHOW TAIL NUMBERS > YES > ACCEPT (button).

Other ADS-B Settings:

SETUP MENU > TRAFFIC SETUP > SHOW ADS-B GHOST TARGETS

- NO/YES – hides/shows ghost targets on Map (Default = NO).
- INITIAL RADIUS – radial distance from aircraft in which targets are hidden (Default = 0.25 NM)
- INITIAL ALTITUDE DIFFERENCE – altitude difference between aircraft and target in which target is hidden (DEFAULT = +/- 1000 FT).

Post Installation Checks

After the SV-ADSB-470/472 has been configured, confirmation that communication has been established with the module by performing the following procedure:

- Go to SETUP MENU > ADS-B STATUS.
- Confirm that the DEVICE line reads SV-ADSB-470/472.
- Use the STATUS line to determine whether the SV-ADSB-470/472 is successfully communicating with SkyView. It can also be used to determine whether the as well as if it is able to see any ADS-B ground stations. The status line can display any of the following states:
    - NOT FOUND: The device is not communicating with SkyView. This usually implies a connectivity/wiring problem between the SV-ADSB-470/472 and SkyView, or that the SV-ADSB-470/472 is not receiving power.

- NO SIGNAL: The device is communicating with SkyView, but data is not being received from an ADS-B ground station. This may occur when you are on the ground and do not have line-of-sight reception of an ADS-B ground station, or if you are in the air and are out of range of all ADS-B ground stations. If there is an ADS-B ground station in range, and NO SIGNAL is persistently displayed, it may imply a connectivity problem with your ADS-B antenna or an installation issue that is preventing the ADS-B antenna from receiving ADS-B ground station broadcasts. Note that when in flight, the Map Page displays a status widget in its lower left corner that contains the same information as this menu status item. That widget will be more useful for ascertaining proper operation once you are in the air and are most likely to be receiving data from ADS-B ground stations.
- RECEIVING: The device is communicating with SkyView AND data is being received from an ADS-B ground station.

If SkyView is not (yet) receiving a valid GPS fix, ADS-B data that is received will not be processed / updated until SkyView does have a valid GPS fix.

- You may also observe the red LED indicator on the SV-ADSB-470 module to confirm proper hardware operation:
  - Flashing Fast: The SV-ADSB-470 is operating normally, is configured and communicating with SkyView over a correctly-configured serial port, and is receiving GPS data from SkyView.
  - Flashing Slowly: The SV-ADSB-470 is receiving power and operating normally, but is not fully communicating with SkyView.
  - Off: The SV-ADSB-470 is not receiving power.
  - On: The SV-ADSB-470 is receiving power, but is not operating normally. Cycle power on the SV-ADSB-470 to try to clear this condition. If the indicator remains On (solid, no blinking), after cycling power, contact Dynon Avionics Technical Support (contact information at the beginning of this manual).
- You may also observe the multi-color LED indicator on the SV-ADSB-472 to confirm proper hardware operation:
  - Off: The SV-ADSB-472 is not receiving power.
  - Solid Green: The SV-ADSB-472 is defective.
  - Green with yellow flashes once per second: The SV-ADSB-472 is functioning but not receiving a signal.
  - Green with yellow flashed more often than once per second: The SV-ADSB-472 is functioning and is receiving signal.

SV-ADSB-472 Software Updates

To determine your SV-ADSB-472's Software version, go to SETUP MENU > ADS-B STATUS and observe the FIRMWARE VERSION line, as illustrated in Figure 168 – ADS-B SOFTWARE UPDATE MENU below. If a newer version is available, you may initiate the software update by pressing the LOAD button.

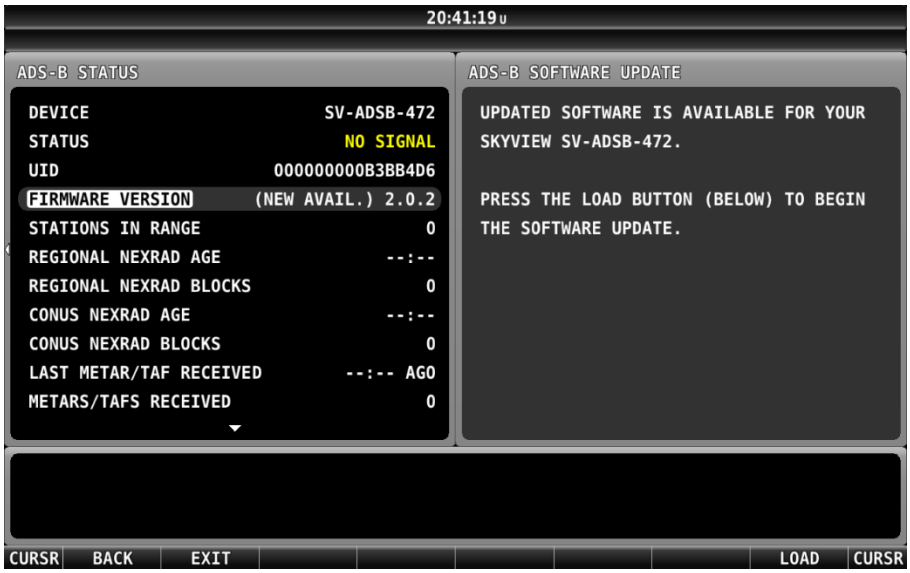

Figure 168 – ADS-B SOFTWARE UPDATE MENU

15. Accessory Installation and Configuration

This section contains information regarding installation and configuration of various Dynon Avionics-supplied accessories for the SkyView system.

SkyView System Angle of Attack Pitot Probe

The Dynon Avionics AOA/Pitot Probe and the Dynon Avionics Heated AOA/Pitot Probe are used on Dynon Avionics products other than the SkyView system, thus the "generic" installation instructions have a dedicated manual – **Heated and Unheated AOA/Pitot Probe Installation Guide**, which can be downloaded from http://docs.dynonavionics.com.

Heated AOA/Pitot Status on EMS Page

Instead of a dedicated indicator for Heated AOA/Pitot Status, the status of the Heated Pitot Controller can be displayed on the EMS portion of the SkyView display instead of a dedicated indicator (requires that an SV-EMS-220 or SV-EMS-221 is installed for engine monitoring).

1. Connect the heater status output (White) wire to the any of the following General Purpose Inputs that are not already in use: Any of SV-EMS-220/221 pins 4, 7, 9, 10, 11, 12, 20, or 21. (General Purpose Inputs Pins 6, 8, 22, 23, and 31 are more specialized and should be reserved for other use.)
2. SETUP MENU > EMS SETUP > SENSOR INPUT MAPPING
   C37 Pxx (pin that the heater status output is connected to) set to
   CONTACT | CONTACT | PHEAT (or a CUSTOM name of your choice).
3. SETUP MENU > EMS SETUP > SENSOR SETUP > PHEAT CONTACT
   ALARM OFF

   RANGE: 1
   ENABLE: YES
   NAME: ON (or name of your choice to indicate the Heated AOA/Pitot Probe is powered on and operating normally – maximum of 7 characters)
   COLOR: GREEN
   TOP: 5.0V
   BOTTOM: 2.1V

   RANGE: 2
   ENABLE: YES
   NAME: OFF (or name of your choice to indicate the Heated AOA/Pitot Probe is not receiving power or is not operating normally – maximum of 7 characters)
   COLOR: RED
   TOP: 2.0V
   BOTTOM: 0.0V

RANGE 3, RANGE 4, RANGE 5
ENABLE: NO
(other parameters are ignored when ENABLE set to NO)

4. SETUP MENU > EMS SETUP > SCREEN LAYOUT EDITOR
   SENSOR (button)
   Select PHEAT (or custom name) CONTACT
   ACCEPT (button)
   Adjust size of the icon to your preference.
   Adjust location of the icon to your preference.
   SAVE (button)
5. Repeat step 5 for 20%, 50%, and 100% layouts as desired
6. Test:
   When Pitot Heater Controller is OFF (or fault), EMS screen should display RED indicator with text OFF (or your preferred text).
   When Pitot Heater Controller is ON, EMS screen should display GREEN indicator with text ON (or your preferred text).

Angle of Attack Audio Alert Volume

To adjust the volume of the AOA Audio Alert: SETUP MENU > SYSTEM SETUP > AUDIO SETUP > AOA VOLUME: (0% TO 100%). Note that AOA VOLUME is a *percentage of the audio level of MASTER VOLUME CONTROL*. Example 1: If MASTER VOLUME CONTROL is set to 50%, and AOA VOLUME is set to 100%, the volume AOA Audio Alerts will be the same as all other audio from the SkyView system. Example 2: If MASTER VOLUME CONTROL is set to 100%, and AOA VOLUME is set to 50%, the volume AOA Audio Alerts will be approximately half as loud as all other audio from the SkyView system.

In-flight AOA Calibration

It is your responsibility to fly your plane safely while performing any configuration or calibration in flight. The best scenario includes a second person to perform any necessary steps on any SkyView components.

Detailed instructions on calibrating the Dynon Avionics AOA/Pitot Probe as installed on your plane, for your plane's particular flight characteristics, are provided on-screen on the SkyView display. You can *preview* the instructions prior to a flight: SETUP MENU (push buttons 7+8 together), then HARDWARE CALIBRATION > ADAHRS CALIBRATION > AOA CALIBRATION, as shown in Figure 169 below.

If your panel is equipped with multiple SkyView displays, the AOA Calibration procedure can be performed from any SkyView display, including a SkyView display that is not configured to display PFD. As shown Figure 169 below, entering the AOA Calibration menu automatically, temporarily, reconfigures that SkyView display for Primary Flight Display on the left half, and the AOA Calibration

Instructions on the right half. Upon exiting the AOA Calibration menu, the SkyView display is returned to its normal configuration.

Figure 169 – AOA Calibration Explanation and Wizard

If the plane is in flight, after pushing buttons 7+8 you will see the abbreviated IN FLIGHT SETUP MENU, from which you can directly select AOA CALIBRATION.

Figure 170 – IN FLIGHT SETUP MENU

Encoder Serial-to-Gray Code Converter

This section guides you through the installation of a Dynon Avionics Encoder Converter (P/N 100362-000). The Encoder Converter is an electronic device that receives the serial encoder data from a SkyView display and outputs standard Mode-C Parallel Gray code into your Mode-C SV-XPNDR-261/262.

This Encoder Converter requires data from a SkyView display and is not to be confused with other standalone encoders available on the market. The Encoder Converter does not output an encoder strobe signal.

The Encoder Converter is designed to be powered off voltages between 10 and 30 volts DC.

Tools and Equipment

The following parts are not included with your Encoder Converter purchase but may be necessary to complete the installation.

- Wire cutters
- Connector crimp tool
- Crimp pins
- SkyView Display Harness (SV-HARNESS-D37)
- Connector to mate with Gray code SV-XPNDR-261/262

Electrical Installation

The following sections describe the wiring requirements for using the Encoder Converter. Please follow these instructions explicitly as improper wiring can result in permanent damage to your unit.

Recommended Wire Practices

Use correct splicing techniques for all electrical connections, taking care to properly insulate any exposed wire. A short circuit between any of the wires may cause damage to the Encoder.

The wire used in construction of your Encoder Converter is 22 AWG avionics grade Tefzel wire, which meets Mil Standard MIL-W-22759/16.

Make sure all connections are secure and all wires are routed and strain relieved to ensure that the wires will not chafe against any other object in the aircraft.

Transponder Wiring

Wire the Encoder Converter signals to their respective connections on your Mode-C transponder according to Table 86. Mode-C transponder pinouts vary from device to device. To find the correct pinout, look at the manual for your transponder or contact its manufacturer. The table below details which color wire should be connected to each Transponder pin. All of

the wires listed in the table leave one end of the Encoder Converter in a single bundle. If your transponder has a switched power output, connect this to the power inputs on the Encoder Converter. If your transponder does not include this switched power output, the Encoder Converter power connections should be made directly to your switched avionics power. Ensure that all avionics power is off before performing the wiring step of this installation.

If your Altitude Transponder has either a strobe signal or a D4 pin, leave these pins unconnected.

Transponder Pin	Encoder Converter Wire Color
A1	Yellow
A2	Green
A4	White with Blue stripe
B1	Blue
B2	Orange
B4	White with Red stripe
C1	White with Green stripe
C2	White
C4	White with Black stripe
Power (10 to 30 volts DC)	Red
Ground	Black
Strobe Signal	Do not connect

Table 86 – Transponder to Encoder Converter Wiring

The Gray code output of the Encoder Converter reports altitude not adjusted for barometric pressure, as required by FAA specification. The altitude reported by the SkyView encoder will always match the altitude shown on screen when the BARO value is set to 29.92 inHg.

SkyView Display Connection

Before wiring connections to the SkyView display check to ensure that the wire length between your Encoder Converter and your display is appropriate. Add or remove wire length if needed or desired. Customizing the wire length will facilitate an installation that is both cleaner and more secure.

If you have more than one SkyView display, note that like all other serial devices, the encoder converter module needs to be connected to a serial TX from each display simultaneously. See the RS-232 Serial Devices section for more information about this requirement.

Any general purpose SkyView display serial port is compatible with the Encoder Converter module. Connect the Encoder's input (green or red) to an appropriate wire on the display harness (reference the Electrical Installation section for details on which pins to use). Also ensure that the display and the Encoder Converter Module share a ground.

Figure 171 illustrates the basic electrical connection between the SkyView display and the Encoder Converter module.

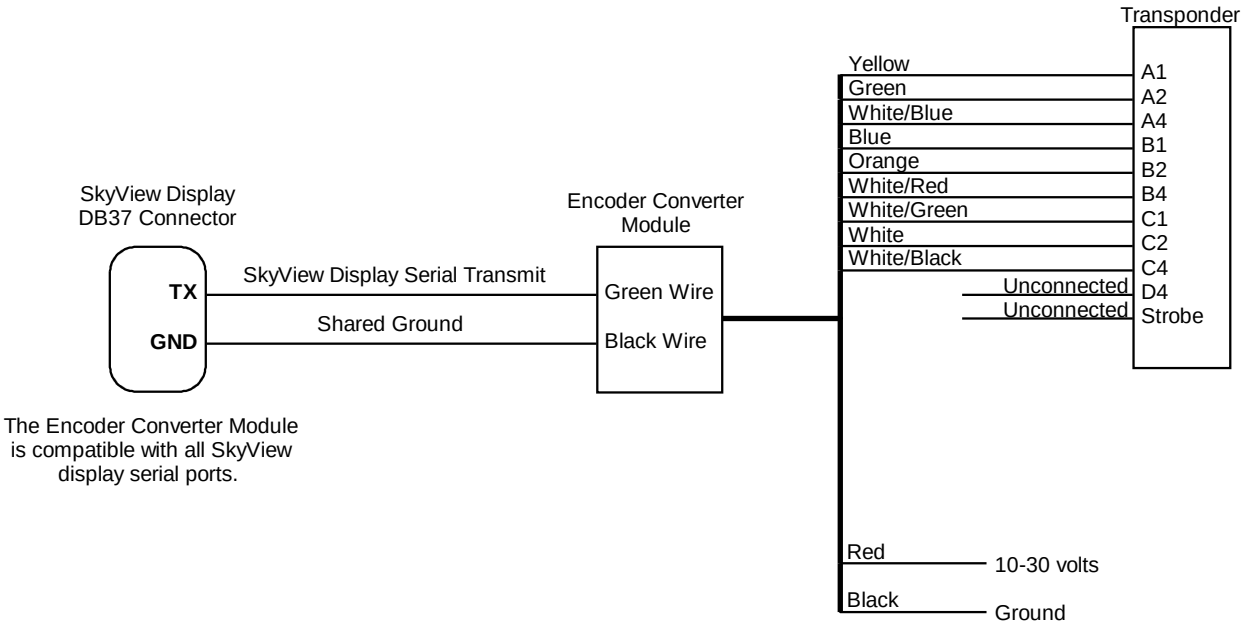

Figure 171 – Encoder Converter Module Electrical Connections

Serial Port Setup–DYNON CONVERTER Format

Enter the Serial Port Setup Menu (SETUP MENU > SYSTEM SETUP > SERIAL PORT SETUP) on each display and configure the appropriate serial port for use with the Encoder Serial-to-Gray Code Converter module with the following settings:

SERIAL # IN DEVICE:	NONE
SERIAL # IN FUNCTION:	NONE
SERIAL # IN/OUT BAUD RATE:	1200
SERIAL # OUT DEVICE:	DYNON CONVERTER

Capacitance to Voltage Converter for Van's Capacitive Plates

Dynon Avionics Capacitance to Voltage Converter for Van's Capacitive Plates (P/N 100654-000) is designed to interface the capacitive plates fuel level sensor option for Van's Aircraft RV aircraft to Dynon Avionics EMS units, including the SkyView SV-EMS-220/221. The capacitance signal is via a BNC Male connector (the connector for the Van's capacitive plates is a BNC Female) and the output is a 0-5 volts DC. Input power for the Capacitance to Voltage Converter for Van's Capacitive Plates is 10 to 15 volts DC. We recommend that you connect the Capacitance to Voltage Converter for Van's Capacitive Plates to the SV-EMS-220/221 power input as shown in the table below, but it will also work properly when connected directly to standard 12 volt DC aircraft power. If your aircraft runs on 24 volt DC power, you must connect the Capacitance to Voltage Converter for Van's Capacitive Plates to the SV-EMS-220/221 for power - voltage inputs higher than 15 volts DC will damage the unit.

The Dynon Avionics Capacitance to Voltage Converter for Van's Capacitive Plates (P/N 100654-000) is designed for use only with the capacitive plates fuel level sensor option for Van's Aircraft RVs with a capacitance range of 50 – 1000 pF. While some installers have installed the Dynon Avionics Capacitance to Voltage Converter for Van's Capacitive Plates to interface to other capacitive fuel level sensors, *it was not designed for such use*. We recommend that you do not purchase and install this product for use with any capacitive fuel level sensor other than the Van's Aircraft RV capacitive plates fuel level sensor.

General Installation Recommendations

Connect the BNC Male connector of the Dynon Avionics Capacitance to Voltage Converter for Van's Capacitive Plates to the BNC Female connector on your Van's RV fuel tank. Connect the wires as shown in the table below. If you need to extend the wire beyond the supplied length, we recommend avionics grade 22 AWG wire with Tefzel® type insulation.

Wire	SV-EMS-220/221 Pin	Function
Black	Any of 5, 13, 16, 17, or 30	Ground
White	Any of 8, 22, 23, or 31	Capacitance converter output to EMS fuel level input (0V DC to 5V DC)
Red	15	12V DC Power (normally used for fuel flow sensor)

Table 87 – Capacitance to Voltage Converter for Van's Capacitive Plates Wiring

After installing and wiring the Capacitance to Voltage Converter for Van's Capacitive Plates, refer to the Fuel Level Sensor Section for EMS configuration and other setup information. This section walks you through the general steps to setup and calibration of your Van's RV capacitance fuel level sensors.

SkyView Video Input Adapter

Display of video from the SkyView Video Input Adapter is not supported in SkyView SE. If you intend to install and use SkyView SE, do not purchase or install a SkyView Video Input Adapter.

The SkyView Video Input Adapter (P/N 102211-000) allows display of a video source (nominally, a camera), displayed either 100% (*SkyView Classic only*), or 50% of the SkyView Classic or SkyView HDX display to which it is connected. The video image on one SkyView display cannot be "shared" to other SkyView displays. Only one Video Input Adapter can be used per SkyView display.

The SkyView Video Input Adapter works with:
SV-D700 displays S/N 4000 and higher
SV-D1000 displays S/N 6000 and higher
All SV-D1000T (SkyView Touch) displays (including units upgraded from SV-D1000)
All SV-HDX800 displays
All SV-HDX1100 displays
If you have a display with an earlier S/N, please contact Dynon Avionics Technical Support (contact information at the beginning of this manual). The Video Input Adapter is supported only in SkyView Software v11.0 (and later). It is not functional in any earlier version of SkyView Software.

Figure 172 - SkyView Video Input Adapter

SkyView Classic and SkyView HDX only support the Video Input Adapter available from Dynon Avionics. Although other similar adapters are available, they will likely not function with SkyView and are not supported by Dynon Avionics.

The Video Input Adapter includes various connectors for multiple input sources, but in SkyView, only the Composite Video (the middle cable in the illustration at left – Yellow, single RCA connector) and the S-Video (the left cable in the illustration at right, 4-pin mini-DIN) inputs are functional. The Composite Video and S-Video inputs are compatible with both NTSC (US analog video standard) and PAL (non-US analog video standard) video sources.

There is only one video input – you can use *either* the Composite input *or* the S-Video input, but *not* both.

Dynon Avionics does not supply cameras or other video sources, or cabling associated with video devices. The video device will require power that is not supplied or controlled by SkyView.

Video quality of analog video devices such as cameras that output composite or S-Video is extremely sensitive to the quality of cable used. It is recommended to use high quality video cable for the connection between the video source (especially a camera) and the Video Input Adapter.

Installation

The Video Input Adapter is small and light, and therefore does not have any built-in mounting hardware. You should ensure that it is installed and secured in a manner that will provide for reliable operation. Take care to not damage the connector that mates the Video Adapter's body and its S-video / composite video input cable assembly.

The Video Input Adapter is supplied with a USB extension cable. The intent is to mount the Video Input Adapter in a suitable location behind the panel, in reasonable proximity to the SkyView display, and route the USB extension cable to the SkyView display and plug it into one of the two USB connectors on the back of the SkyView display. (It is not recommended to plug the Video Input Adapter into the USB cable connected to the 37-pin connector.) If the supplied USB extension cable is unsuitable for your installation, another (longer) USB cable may be substituted.

If video extension cables are used, consider using heat shrink tubing over the extension cable connectors to minimize the possibility of the connectors migrating loose over time.

Setup Configuration

Unlike the typical "plug and play" experience with USB devices, a SkyView display only checks for a Video Input Adapter connected during bootup. If your SkyView display is powered on when you connect the Video Input Adapter, reboot the SkyView display (push buttons 1+2+5 simultaneously) for the Video Input Adapter to be recognized.

When the SkyView display has recognized the Video Input Adapter, a small blue indicator will illuminate on the Video Input Adapter.

To configure the Video Input Adapter:

SETUP MENU > LOCAL DISPLAY SETUP >

VIDEO INPUT >

- NTSC COMPOSITE – Your video source is connected to the Composite (Yellow RCA) connector and it complies with NTSC (US analog video standard)
- PAL COMPOSITE – Your video source is connected to the Composite (Yellow RCA) connector and it complies with PAL (non-US analog video standard)
- NTSC S-VIDEO – Your video source is connected to the S-Video (Mini-DIN) connector and it complies with NTSC (US analog video standard)

- PAL S-VIDEO – Your video source is connected to the S-Video (Mini-DIN) connector and it complies with PAL (non-US analog video standard)

FLIP HORIZONTAL: YES | NO - Select as appropriate for the image from your video input device to display correctly on the SkyView display.
FLIP VERTICAL: YES | NO - Select as appropriate for the image from your video input device to display correctly on the SkyView display.

Note that this menu will not be visible if no Video Input Adapter has been detected.

Checkout and Operation

To view the video input on your *SkyView Classic* display:

TOOLS > VIDEO

If the Video Input Adapter is connected and working, but no video signal is being received by the Video Input Adapter, a blank blue field will be displayed for video on the SkyView display. If you see this blue field displayed:
1. Check your connections to your video source.
2. Check that power is on to the video source.
3. Check that that the video input is correctly configured for your video device (typically, PAL vs NTSC).

Pushing the VIDEO button repeatedly toggles the video display on and off.

Unlike the PFD, EMS, and MAP Pages, which can be displayed in various sizes, video can only be displayed as a 100% (full screen) in SkyView Classic or 50% (split screen) page in SkyView Classic or SkyView HDX.

To configure video to be displayed 100% or 50% page on your SkyView Classic display:

- TOOLS > VIDEO (have video displayed) then
- SCREEN > LAYOUT. If PFG PG, EMS PG, and MAP PG are all toggled off, video will be displayed 100%.
- To display video, push the PFD PG or EMS PG or MAP PG to display these at 50% with video 50%.
- When video is 50%, push the LAYOUT button to select whether video is display on the left side of the display, or the right side of the display.

Note that this menu will not be visible if no Video Input Adapter has been detected. More operational detail on using video is provided in the SkyView Pilot's User Guide.

To view the video input on your *SkyView HDX* display:

DISPLAY button, then tap the VIDEO icon in the SPLIT CONTENT section.

Depending on the layout of your SkyView HDX display, the VIDEO window will appear on the left, or right 50% window, overlaying the non-primary 50% window, or converting a 100% window into 50% / 50% windows.

If the Video Input Adapter is connected and working, but no video signal is being received by the Video Input Adapter, a blank blue field will be displayed for video on the SkyView display. If you see this blue field displayed:
1. Check your connections to your video source.
2. Check that power is on to the video source.
3. Check that that the video input is correctly configured for your video device (typically, PAL vs NTSC).

Pushing the VIDEO button repeatedly toggles the video display on and off.

Unlike the PFD, EMS, and MAP Pages, which can be displayed in various sizes, video can only be displayed as a 100% (full screen) in SkyView Classic or 50% (split screen) page in SkyView Classic or SkyView HDX.

To configure video to be displayed 100% or 50% page on your SkyView Classic display:

- TOOLS > VIDEO (have video displayed) then
- SCREEN > LAYOUT. If PFG PG, EMS PG, and MAP PG are all toggled off, video will be displayed 100%.
- To display video, push the PFD PG or EMS PG or MAP PG to display these at 50% with video 50%.
- When video is 50%, push the LAYOUT button to select whether video is display on the left side of the display, or the right side of the display.

Note that this menu will not be visible if no Video Input Adapter has been detected. More operational detail on using video is provided in the SkyView Pilot's User Guide.

SkyView Wi-Fi Adapter

Use of Wi-Fi is not supported in SkyView SE. If you intend to install and use SkyView SE, do not purchase or install a SkyView Wi-Fi Adapter.

The SkyView Wi-Fi Adapter allows communication with selected Wi-Fi devices and selected applications (apps) on those devices. When equipped for Wi-Fi, it is required that a SkyView Wi-Fi Adapter be installed on each SkyView display in the plane. The SkyView Wi-Fi Adapter is the only Wi-Fi adapter that Dynon Avionics supports for use with SkyView.

Figure 173 - SkyView Wi-Fi Adapter

The SkyView Wi-Fi Adapter functions as a Wi-Fi Access Point (AP) – compatible devices connect to the SkyView display as you would connect to a Wi-Fi AP for Internet Access.

While selected devices can connect to a SkyView Wi-Fi Adapter in a manner similar to connecting to a Wi-Fi AP, a SkyView system does not provide Internet Access.

On the back side of the SkyView Wi-Fi Adapter (opposite the Dynon Avionics label) there is a small pushbutton. This pushbutton is not activated for use with SkyView; it has no function.

The SkyView Wi-Fi Adapter is compatible with all SkyView displays – SV-D700, SV-D1000, and SV-D1000T.

Physical installation of the SkyView Wi-Fi Adapter is simple. With the SkyView display powered off, plug it into an available USB port on the back of the SkyView display. It is not recommended to plug the SkyView Wi-Fi Adapter into the USB cable that is part of the SV-HARNESS-D37. Each SkyView Wi-Fi Adapter is shipped with a short USB extension cable which may increase performance and/or range in certain SkyView installations, such as tandem planes where SkyView displays are not located close to each other in a panel.

Although you must have a SkyView Wi-Fi Adapter connected to each SkyView display, they work together as a system. Thus, configuration of SkyView's Wi-Fi system only needs to be done on one SkyView display and those settings will take effect on all SkyView displays.

To configure the SkyView Wi-Fi Adapter, push buttons 7+8 to access the SETUP MENU. Then, select SYSTEM SETUP > WI-FI SETUP.

STATUS: Displays the status of the Wi-Fi system:

- **ONLINE** – The SkyView Wi-Fi system is configured and operating normally.
- **OFFLINE** – The SkyView Wi-Fi system is not configured, disabled, or not functioning.

- **OFFLINE: NO ADAPTER OTHER SCREEN** – A SkyView Wi-Fi Adapter connected to another SkyView display(s) is not connected or not functioning.
- **OFFLINE: NO ADAPTER THIS SCREEN** – A SkyView Wi-Fi Adapter connected to this SkyView display is not connected or not functioning.
- **OFFLINE: NOT ENABLED** – A SkyView Wi-Fi Adapter connected to this SkyView display is not connected or not functioning.
- **OFFLINE: PASSWORD NOT SET** – A valid password must be set [see WI-FI PASSWORD (WPA2) requirements below] before the SkyView Wi-Fi system can be used.
- **OFFLINE: TAIL NUMBER NOT SET** – The tail number must be set (see SETUP MENU > SYSTEM SETUP > AIRCRAFT INFORMATION) before the SkyView Wi-Fi system can be used. The tail number is part of the WI-FI NETWORK NAME (see below).

WI-FI NETWORK NAME: Displays the Wi-Fi Network name that will be displayed on a connected device; this name is selected by the system and cannot be changed by the installer.

WI-FI ENABLED:

- YES – Normal operation of SkyView Wi-Fi System (Wi-Fi signal is transmitted).
- NO – Disable the SkyView Wi-Fi System (Wi-Fi signal is not transmitted).

WI-FI PASSWORD (WPA2):

- Minimum of 8 characters
- Maximum of 12 characters
- Valid characters are a-z, A-Z, 0-9, and _ (underscore)
- Uppercase and lowercase is significant – the password typed in on the device must match the uppercase and lowercase.
- After entering the password, push the ACCEPT button. When in the WI-FI SETUP menu the password will be displayed as **********, but the password you created can be seen by re-entering the WI-FI PASSWORD (WPA2) menu.
- Push the DEFAULT button to delete the password and start over with blank spaces.
- Write down the password for future reference and easy recall, such as in the plane's logbook.

WI-FI ICON ON APPLE DEVICES:

(Help text shown on screen) This setting should only be set to NO for Apple devices that have both Wi-Fi and Cellular data capabilities. When set to YES, Apple devices will show the Wi-Fi icon. However, Cellular data will not be usable. When set to NO, Apple devices will not show the Wi-Fi icon (even if connected to SkyView), but Cellular data will still be usable.

- YES – Choose YES if you are using an Apple iPad that does not have cellular capability (Wi-Fi only), or an Apple iPod Touch.

- NO – Choose NO if you have an Apple iPhone or Apple iPad with cellular capability AND you wish to use the cellular Internet connection at the same time as being connected to the SkyView Wi-Fi system.

Wi-Fi Operations

Instructions for using the SkyView Wi-Fi System with specific devices and applications is included in the SkyView Pilot's User Guide, which is updated when additional devices and applications are added to SkyView's Software.

Advanced Flight Systems (AFS) ADVANCED Control Module (ACM)

SkyView SE does not integrate with any IFR navigation sources, and excludes features and components commonly used in an aircraft equipped for IFR flight. If you intend to use SkyView SE incorporated into an ADVANCED Quick Panel System, confirm (with Advanced Flight Systems) that your choice of (optional) navigation units is compatible with SkyView SE.

The ADVANCED Control Module (ACM) is only sold as part of a pre-integrated ADVANCED Quick Panel System sold by Advanced Flight Systems (AFS). If you have purchased a Quick Panel System, all wiring will be preinstalled and all necessary settings will be preconfigured. Support for the ACM was added as of SkyView Software v13.0.

Because this manual is often used as part of preplanning an avionics system, note that the ACM requires the following connections:

- Serial Port 1 is used to communicate with the ACM.
- Serial Port 2 TX is used to communicate with the ELT.
- Serial Port 3 is used for the SV-XPNDR-261/262 transponder.,
- Serial Port 4 is used for the SV-ADSB-470/472 ADS-B IN receiver
- Serial Port 5 is used for the SV-GPS-250/2020 GPS receiver,
- SkyView Network (in addition to the serial port)

SV-BUTTON-LEVEL

Note that on SkyView SE, installation of the SV-BUTTON-LEVEL is the only method that can be used to engage the AP LEVEL mode.

To provide a prominent LEVEL button on the panel, Dynon Avionics offers the SV-BUTTON-LEVEL; P/N 102553-000 – see Figure 175 for the SV-BUTTON-LEVEL kit, AND Figure 174 for the SV-BUTTON-LEVEL button. Like most other Dynon Avionics panel units, the SV-BUTTON-LEVEL is backlit and the degree of backlighting is controlled by SkyView. The SV-BUTTON-LEVEL is the same width, and similar appearance, as Dynon Avionics panel units such as SV-AP-PANEL, SV-COM-PANEL, SV-KNOB-PANEL, and SV-INTERCOM-2S.

Pressing an External LEVEL Button such as the SV-BUTTON-LEVEL, the SkyView's AP LEVEL mode is engaged.

In SkyView, this is equivalent to pressing MAIN MENU > AUTOPILOT > LEVEL and the LEVEL button on the (optional) SV-AP-PANEL.

Figure 175
SV-BUTTON-LEVEL Kit

Figure 174
SV-LEVEL-BUTTON

Installation:

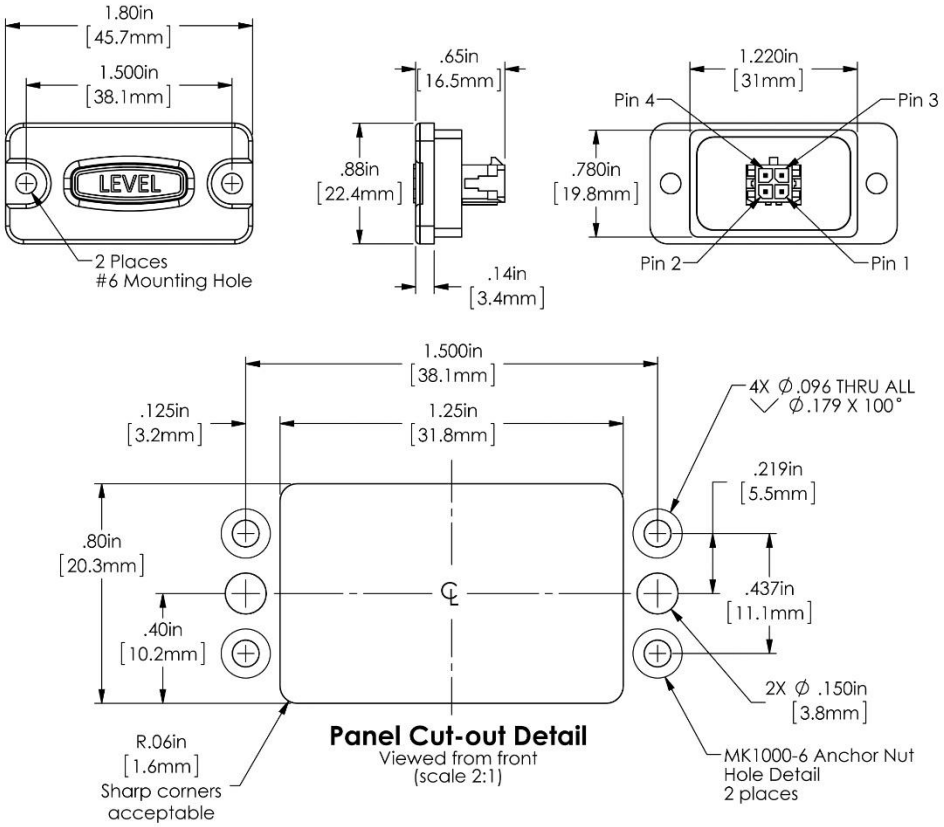

Figure 176 – SV-BUTTON-LEVEL Installation Dimensions

Pin	Wire Color	Connection Points / Notes
1	Red	Aircraft Power; connect to same point as SkyView display Power (Red) wires, Pins 1 and 20
2	White	SkyView Pin 26 – White wire 24V electrical systems require a 1.1KΩ resistor (included in the kit) in series with the SV-BUTTON-LEVEL's white wire and the SkyView display's Pin 26 white wire. If you have multiple SkyView displays, connect this wire to only one display.
3	Orange / Black	SkyView Pin 28 – Orange / Black Connect wire. If you have multiple SkyView displays, see the note below – Considerations for SV-BUTTON-LEVEL…
4	Black	Aircraft Ground; connect to the same point as SkyView display Ground (Black) wires, Pins 21 and 22

Table 88 – Connections for SV-BUTTON-LEVEL

Considerations for SV-BUTTON-LEVEL in SkyView Systems with Multiple SkyView Displays

Prior revisions of the SkyView System Installation Guide recommended that in SkyView systems with multiple displays, for redundancy the External LEVEL Button should be connected to all SkyView displays in parallel. The following recommendations supersede that earlier guidance.

Do not connect the Orange / Black wire of the SV-BUTTON-LEVEL *directly* to the Orange / Black Wire (Pin 28) of multiple SkyView displays. If you do so, when one display is powered off, it will cause displays that are powered on to see the LEVEL input as being pushed (the display powered off will "ground" this input). This could cause the unintentional activation of LEVEL mode or could prevent the SV-BUTTON-LEVEL from operating.

Installation Options for SV-BUTTON-LEVEL on Multiple SkyView Displays

Choose one of these options if you have multiple SkyView displays and you want to connect SV-BUTTON-LEVEL to all displays for failover / redundancy:

- Connect the SV-BUTTON-LEVEL to only one display. The SV-BUTTON-LEVEL will operate for all displays in the SkyView system as long as the display the SV-BUTTON-LEVEL is wired to is powered on and operating normally. As a non-flight-critical function, the loss of the SV-BUTTON-LEVEL in some display failures may be acceptable for your installation.
    - In SkyView, use of the LEVEL function via the soft keys via any operating SkyView display is still possible, as well as pushing the LEVEL button on the (optional) SV-AP-PANEL.
- Install a diode for each individual display's connection to the SV-BUTTON-LEVEL (not included in the SV-BUTTON-LEVEL kit). The diode should be installed with the cathode end (painted band on the diode) oriented towards the SV-BUTTON-LEVEL, and should be installed in-line with the contact wire between the SkyView display and the SV-BUTTON-LEVEL. One diode is needed per button, per display. Any diode will work for this

application. An example diode is the very common 1N914, available from Radio Shack (P/N 276-1122). With a diode installed for each display, the SV-BUTTON-LEVEL will work correctly with any combination of displays powered on and powered off.

Configuration:

There is no configuration necessary for installation of the SV-BUTTON-LEVEL.

Troubleshooting:

During bootup, SkyView checks the status of the External LEVEL Button input (SV-BUTTON-LEVEL). If SkyView detects that the External LEVEL Button is pressed (the input is grounded) during bootup, the External LEVEL Button is assumed to be stuck (or incorrectly installed), resulting in:

Figure 177 – EXT LEVEL BUTTON STUCK Message

- A Message is displayed: EXT LEVEL BUTTON STUCK
- The External LEVEL Button input is ignored for the remainder of the time SkyView is operational (will be checked again at next bootup).

Pitot/Static/AOA Pneumatic Installation Kit

Figure 178 – Dynon Avionics Pitot/Static/AOA Pneumatic Installation Kit, P/N 102628-000

The instructions in this section is adapted from "AOA, Pitot, Static Installation Guide – Plumbing Kit, Document 102708-000, Rev A that is included with this kit. That documentation is more generic, intended for use with all Dynon Avionics products that require AOA, Pitot, Static pneumatic connections. The instructions in this section are streamlined specifically for SkyView systems.

These installation instructions are intended to make the task of plumbing this kit into your aircraft as easy and understandable as possible. If there are questions which you find are not answered within these instructions, please feel free to email or call Dynon Avionics Technical Support (contact information at the front of this manual) for assistance. Photos sent via email are very helpful and can improve our understanding of your situation or issue.

This kit does not include a Dynon Avionics AOA/Pitot Probe. For guidance on installing a Dynon Avionics AOA/Pitot Probe, please reference the Dynon Avionics Heated and Unheated AOA/Pitot Probe Installation Guide, Rev C (Document 100740-001).

For quick reference:
Blue tubing is intended for use with the ANGLE OF ATTACK (AOA) port.
Green tubing is intended for use with the PITOT port.
White tubing is intended for use with the STATIC port

Kit Contents				
Dynon Avionics P/N	**QTY**	**Part Description**	**Part Symbol**	**Part Image**
102631-000	6	Straight Male		
102631-001	2	Elbow Male		
102639-000	3	Y-Union		
102639-001	1	T-Union		
102559-000	2	Static Air Port		

102632-000 102632-001 102632-002	25 ft. 25 ft. 35 ft.	Polyethylene Tube Blue (-000) Green (-001) White (-002)	BLUE GREEN WHITE	
102642-000	30	Snap Bushing	N/A	
102641-000	1	Tubing Cutter	N/A	
102630-000 102642-000 102643-000 102644-000	2	Flared Coupling Assembly		See Below

Please read this installation information in its entirety before beginning your installation of your AOA/Pitot/Static pneumatic system. Modifications or adjustments may be necessary for your individual aircraft.

The Dynon Avionics Pitot/Static/AOA Pneumatic Installation Kit uses Quick-Disconnect fittings for the plumbing of this kit. Tubing is mounted into these fittings using stainless steel retainers that allow tubing to enter the fitting but prevent the tubing from sliding back out unless the

retainers are properly retracted by pressing the outer release ring. This allows for connection, disconnection, and reconnection of tubing easily with only one hand. A fresh cut of the tubing with the supplied tubing cutter is recommended before re-inserting the tubing. With the use of these Quick-Disconnect fittings, maintenance and instrument removal are made significantly easier from the standpoint of a builder such as yourself.

Recommended Tools & Installation Accessories

Dynon Avionics has tried to provide you with as many parts and tools as necessary to make the tasks involved in installing your Dynon Avionics Pitot/Static/AOA Pneumatic Installation Kit go more smoothly. Tools that Dynon Avionics recommends for installations that use different tubing are listed below along with an optional retailer to purchase them from if necessary.

Recommended Tools

Aviation Grade Flaring Tool (37 degrees)

www.aircraftspruce.com/catalog/topages/hidutyflaringtool.php?clickkey=4577

www.aircraftspruce.com/catalog/topages/flaringtools2.php?clickkey=4577

Or search “flaring tool” from any trusted aircraft retailer

Automotive or other non-aviation grade flaring tools will cause aluminum to work harden and fail due to flaring in excess of 37 degrees. Dynon Avionics strongly recommends using trusted tools designed specifically for aircraft.

Unique and additional fittings are available through Coast Pneumatics and can be ordered here- http://www.coastpneumatics.com

Installation

Static Port

Two static ports are provided in the Dynon Avionics Pitot/Static/AOA Pneumatic Installation Kit; one to mount on each side of the aircraft, to further increase accuracy in pressure readings.

Static air pressure is obtained through both of the static port fittings mounted into the side of the aircraft. The static port fittings should be mounted appropriately and in accordance with the specific aircraft – in a place where the port can access relatively undisturbed air flow. The static ports furnished as part of the Dynon Avionics Pitot/Static/AOA Pneumatic Installation Kit are designed to be mounted “proud of” (slightly projecting from) the aircraft skin, in order to provide more accurate readings.

After the placement of the static port is determined, verify there is enough room inside the aircraft for the flange and fitting of the static port. Drill a ½” (12 mm) diameter hole from which the static port will protrude. The circular groove on the back side of the port is meant to help

with the alignment and drilling of 2 to 4 evenly spaced rivets. Another option is to use a compound, such as Pro-Seal, to mount the static port and seal out moisture.

Structural Penetration and Pass-Thru

30 snap bushings have been provided in this kit to make plumbing within the fuselage and passing through internal structures easier and reduce possible chafing of the tubing. Once a 3/8" (~9.5mm) diameter hole is drilled through the structure that needs to be bypassed, the snap bushing can be installed by pushing it into the hole. The tubing will fit snugly through the snap bushing and eliminate the possibility of chafing. Do not route tubing through a bulkhead without using a snap bushing.

Tubing

The most important consideration when installing tubing for the AOA, Pitot, Static system is to avoid damage or deformation of the tubing. The tubing cutter provided in the kit is an excellent way to ensure the tubing will not be crushed or given a jagged edge that scissors or other cutting tools might produce. Poor cuts can lead to leaky tubes or damage to the fitting to which they are connected. These leaks may not be obvious at first but can develop over time.

When connecting a tube to a fitting it is important to ensure that the tubing is completely sealed in and has bottomed out. Push the tubing into the fitting until you feel it stop. Push with more pressure and the tube will slide in further and finally bottom out. One way to ensure the tube has been pushed in all the way is to draw a small mark ½" (12mm) up from the end of the tubing going into the fitting. When the tubing is fully inserted into the fitting that mark should fall completely below the lip of the fitting and no longer be visible.

Terminating the AOA, Pitot, Static lines into an SV-ADAHARS-200/201 is discussed in Section 5.

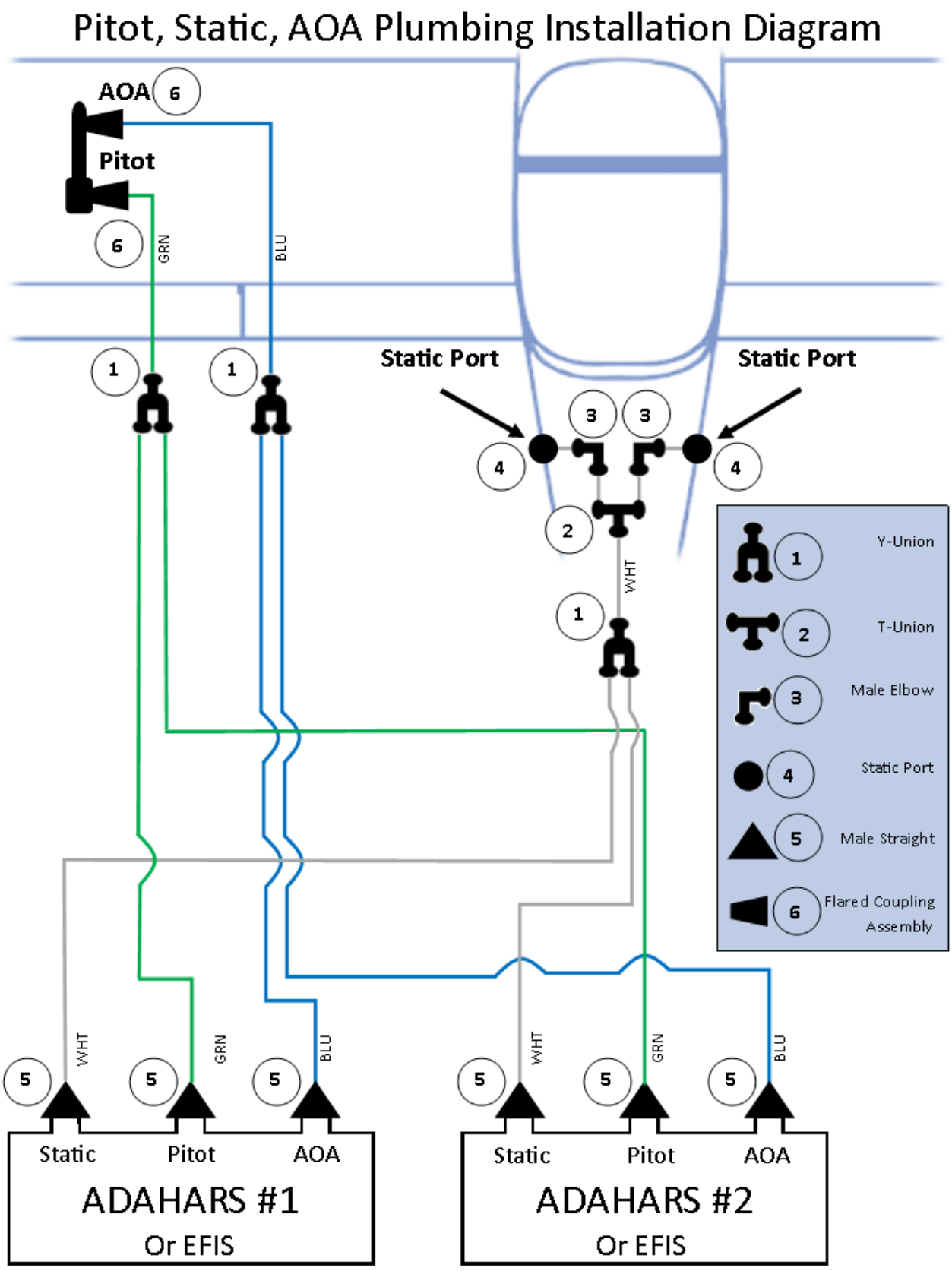
Pitot, Static, AOA Plumbing Installation Diagram
AOA
6
Pitot
6
GRN
BLU
1
1
Static Port
Static Port
3
3
4
4
2
WHT
1
Y-Union
T-Union
Male Elbow
Static Port
Male Straight
Flared Coupling Assembly
5
5
5
WHT
GRN
BLU
Static
Pitot
AOA
ADAHARS #1
Or EFIS
5
5
5
WHT
GRN
BLU
Static
Pitot
AOA
ADAHARS #2
Or EFIS

Panel Module Faceplate Blank

Dynon Avionics offers the Panel Module Faceplate Blank (SV-BLANK-PANEL; P/N 102542-000) – see Figure 179. The Panel Module Faceplate Blank is the same dimensions and screw positions as other Dynon Avionics panel units such as SV-AP-PANEL, SV-COM-PANEL, SV-KNOB-PANEL, and SV-INTERCOM-2S. For dimensional information on installing the Panel Module Faceplate Blank, see any of the panel unit sections.

Figure 179
Panel Module Faceplate Blank

If you have not installed all of the above panel units, but eventually intend to, or if you want to cut your panel with the idea of expansion (such as eventually providing the copilot position with its own SV-KNOB-PANEL or SV-COM-PANEL), the Panel Module Faceplate Blank allows you to cut the panel in advance of purchasing and installing that panel unit, and covering the blank cutout with a cover panel that is complementary to the other Dynon Avionics panel units.

The Panel Module Faceplate Blank is also an ideal place, and method, to locate misc. “external” switches and indicators that are involved in the SkyView system. Placing those switches or indicators on a Panel Module Faceplate Blank acts as a visual demarcation that those buttons, switches, or indicators are related to SkyView, not other aircraft systems. See Appendix K: Switches, etc. External to SkyView Units for a list of all such buttons, switches, and indicators.

SV-KNOB-DIMMER

For manual, fine control of brightness of SkyView displays and SkyView panel units, Dynon Avionics offers the SV-KNOB-DIMMER; P/N 102801-000) – see Figure 180. The SV-KNOB-DIMMER is the same width, and similar appearance, as Dynon Avionics panel units such as SV-AP-PANEL, SV-COM-PANEL, SV-KNOB-PANEL, and SV-INTERCOM-2S.

Figure 180
SV-KNOB-DIMMER

Note that on SkyView SE, installation of the SV-KNOB-DIMMER is the only method to manually control brightness of display and panel modules.

Installation:

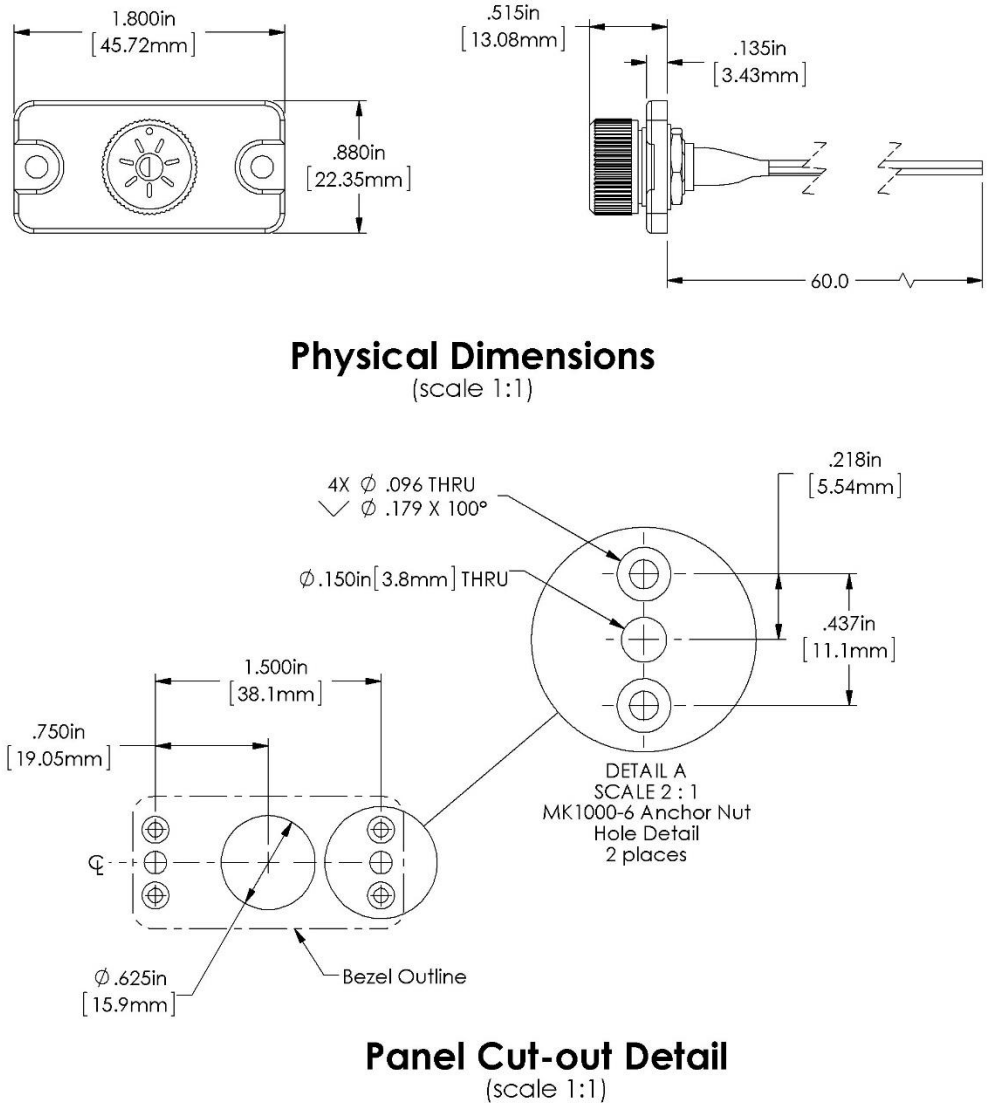

Figure 181 – SV-KNOB-DIMMER Installation Dimensions

Wire Color	Connection Points / Notes
Black	Connect to same point as SkyView display Ground (Black) wires, Pins 21 and 22
Red (electrical system)	Connect to same point as SkyView display Power (Red wires), Pins 1 and 20
Violet	Connect to Violet wire (Pin 25) of SkyView display. If you have more than one SkyView display, connect this wire to Pin 25 on all SkyView displays.

Table 89 – Connections for SV-KNOB-DIMMER

Configuration:

The SV-KNOB-DIMMER allows the brightness level of SkyView displays, and Dynon Avionics panel units, to be adjusted incrementally.

To set the backlight level so that it is controlled by an external variable voltage input (0-30V DC), set BRIGHTNESS SOURCE to EXTERNAL. When this option is selected, dimming is controlled automatically via an external signal. If backlight control is set to external, you must configure the brightness settings on the BRIGHTNESS SETUP Menu. This menu displays several parameters, which are listed and briefly explained below.

- EXTERNAL BRIGHTNESS VOLTAGE – This is the voltage level of the external control signal. Use this value to characterize the ambient light levels in your installation during characterization.
- BRIGHTNESS TARGET – This is a percentage ranging from 0% to 100% that represents the calculated target backlight level based on the sensed ambient light level and the percent brightness voltage map. Note that this is a calculated value and is not set by the user. *The actual brightness never drops below 20% when the Brightness Setup Page is displayed, even though the target value may be below 20%.*
- xx% Brightness Voltage – There are four percent brightness values: 25%, 50%, 75% and 100%. These percentages are correlated to a brightness voltage, which are to the right of the percent value. These percentages along with the minimum brightness voltage (explained below) form the calibration points for the backlight management profile. When the current brightness voltage matches one of these points, the target backlight level is adjusted to that percentage. When the current brightness voltage is in between these points, the display interpolates between the points and calculates an appropriate target backlight level. These voltages must be set by the user.
- MINIMUM BRIGHTNESS VOLTAGE – This is a voltage that represents the external control signal's minimum voltage level. This must be set by the user.

Press the ACCEPT button to save any changes you make.

16. SV-COM-C25 Installation and Configuration

Note: SV-COM-C25 is the complete radio system, consisting of the SV-COM-PANEL control panel installed on the panel, and the SV-COM-425 transceiver installed elsewhere.

Installation instructions for the SV-INTERCOM-2S (referenced in these instructions) has its own, separate manual with much more technical detail than is included in this guide, available for download at http://docs.dynonavionics.com.

Do not transmit without an antenna connected. Doing so will damage your SV-COM-C25.

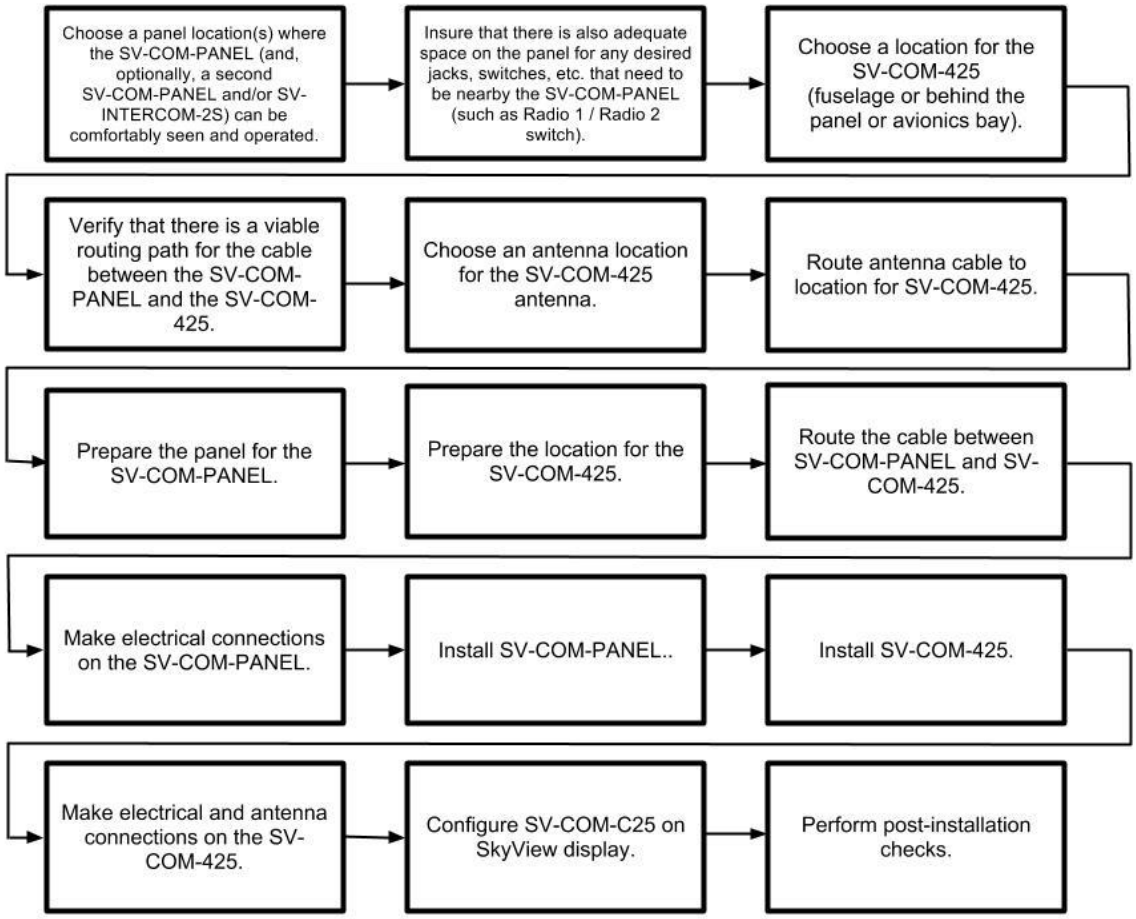

Figure 182 – Suggested SV-COM-C25 Installation, Configuration, and Testing Procedure

Physical Installation: SV-COM-PANEL

SV-COM-PANEL Dimensions

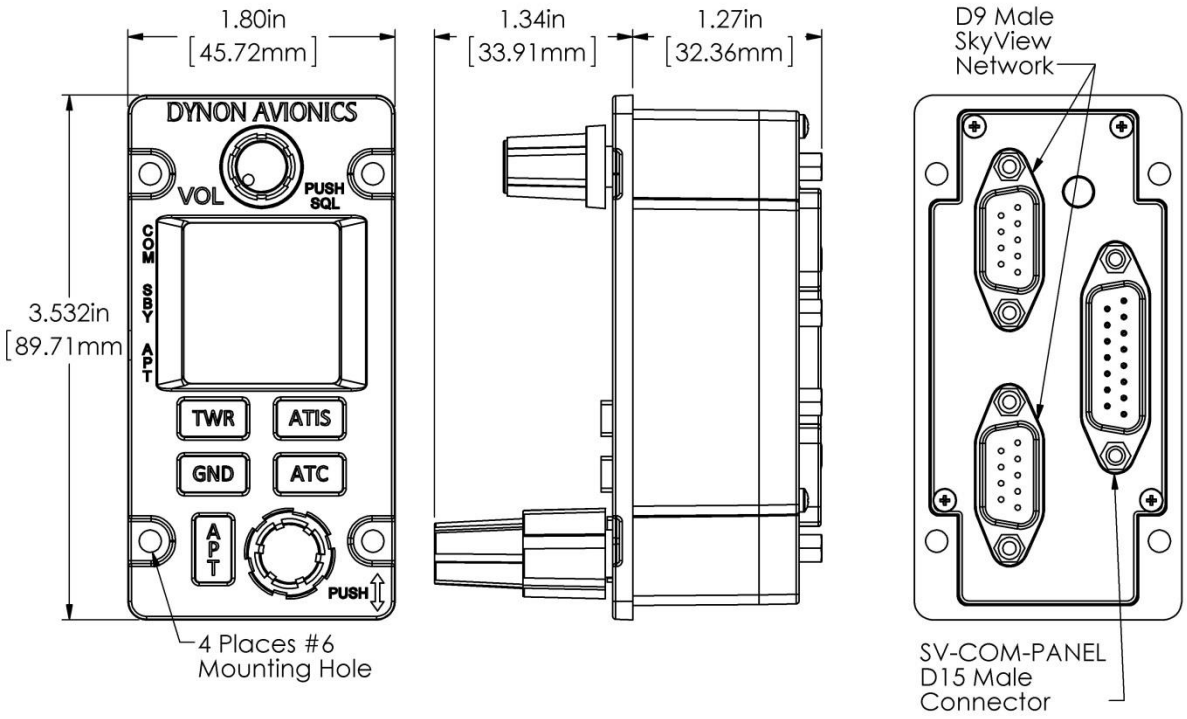

Figure 183 – SV-COM-PANEL Dimensions

Physical Installation

SV-COM-PANEL – VERTICAL Installation Dimension Quick Overview

- Panel Cutout: (irregular – see drawing)
- Bezel Outline: 1.80” W x 3.532” T (45.72 mm W x 89.71 mm T)
- Note that the SV-COM-PANEL/V is sized such that two units can be stacked to the same height as the height of an SV-D1000 display.

SV-COM-PANEL - HORIZONTAL Installation Dimension Quick Overview

- Panel Cutout: (irregular – see drawing)
- Bezel Outline: 3.532” W x 1.80” T (89.71 mm W x 45.72 mm T)

The figures on the following pages show recommended panel cutouts, mounting hole patterns, and mechanical dimension for the SV-COM-PANEL/V (vertical) and SV-COM-PANEL/H (horizontal). Use these diagrams to plan for the space required by the display.

To mount an SV-COM-PANEL, cut the opening in your panel, drill out the mounting holes, install nutplates, and use the included mounting screws to fasten the display to the panel.

Your SV-COM-C25 is shipped with #6-32 hex-drive round head fasteners. Fasteners are 5/8” long and require a 5/64” hex drive tool. Dynon Avionics recommends fastening the included mounting screws to nut plates installed behind the panel. If access behind the panel allows, standard #6-32 lock nuts or nuts with lock washers can be used. *Do not rivet the SV-COM-PANEL to the panel as this will hinder future removal if necessary.*

The following installation procedure should be followed to install the SV-COM-425 remote transceiver module, remembering to allow adequate space for installation of cables and connectors.

- If you are installing two COM radios, it is acceptable to co-locate the two SV-COM-425 transceiver modules.
- Select a position in the aircraft for the SV-COM-425 that is not too close to any high external heat source and where reasonable airflow is available. The SV-COM-425 is not a significant heat source itself and does not need to be kept away from other devices for this reason.
- Avoid sharp bends and placing the cables too near to the aircraft control cables.
- Secure the SV-COM-425 to the aircraft via the four (4) mounting holes. The unit should be mounted to a flat surface.

Additional items you will require for installation of SV-COM-C25, but which are not in the SV-COM-C25 package, include:

- Nutplates for mounting SV-COM-PANEL to the panel
- Circuit breaker or fuse for power to SV-COM-425
- Power wires to SV-COM-425
- SV-COM-425 to SV-COM-PANEL wiring
- SkyView Network cables to connect the SV-COM-PANEL to SkyView Network

- COM Antenna, coaxial cable, terminated to BNC Male connector (or cable and connector is included with your COM antenna). The SV-COM-C25 is compatible with aircraft COM antennas commonly available.

Mounting Dimensions

The following diagrams are NOT to scale. However, paper templates are included with your SV-COM-C25 and may also be downloaded from http://docs.dynonavionics.com.

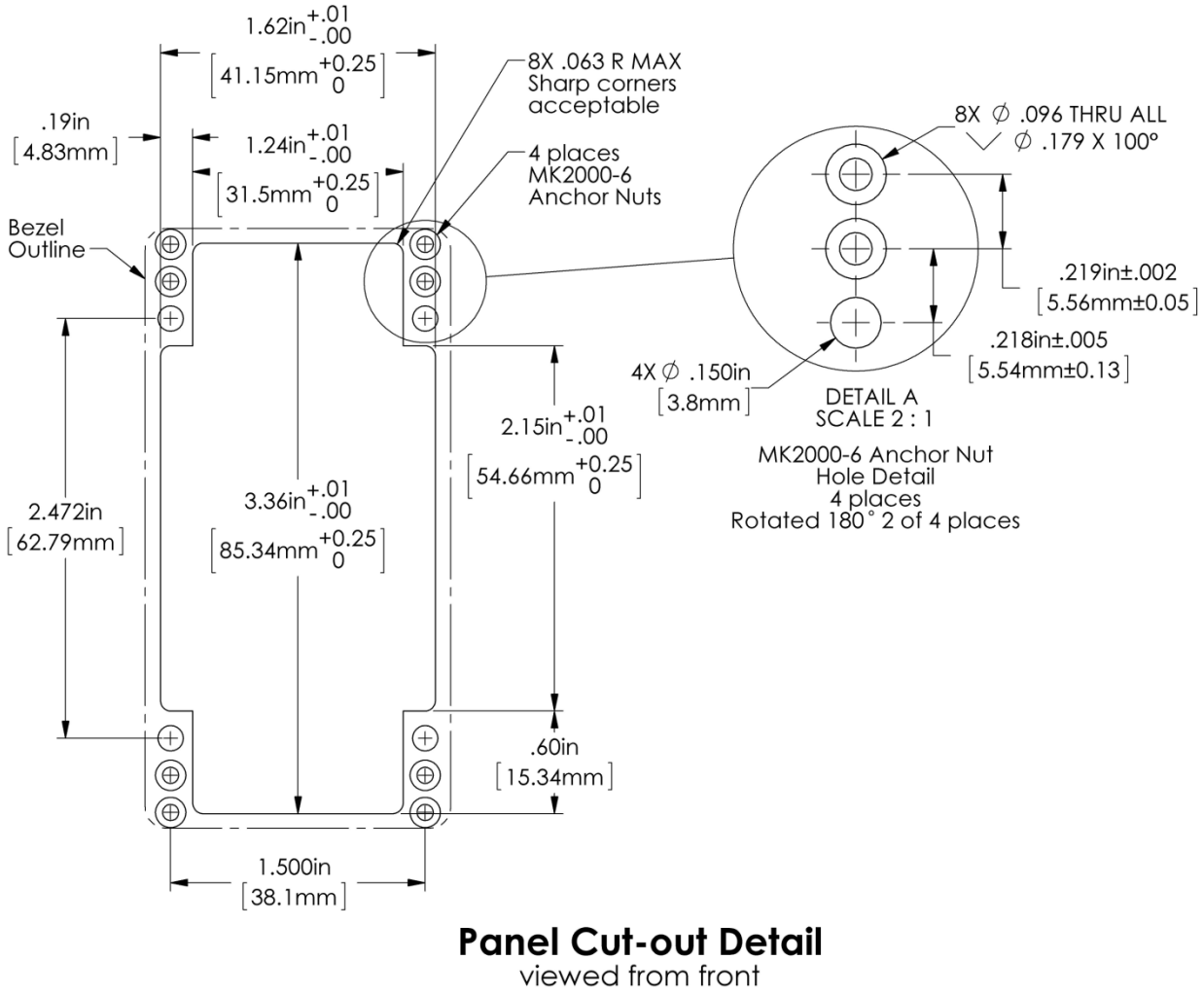

Figure 184 – SV-COM-PANEL - VERTICAL Panel Cutout and Mounting Hole Dimensions - NOT ACTUAL SIZE

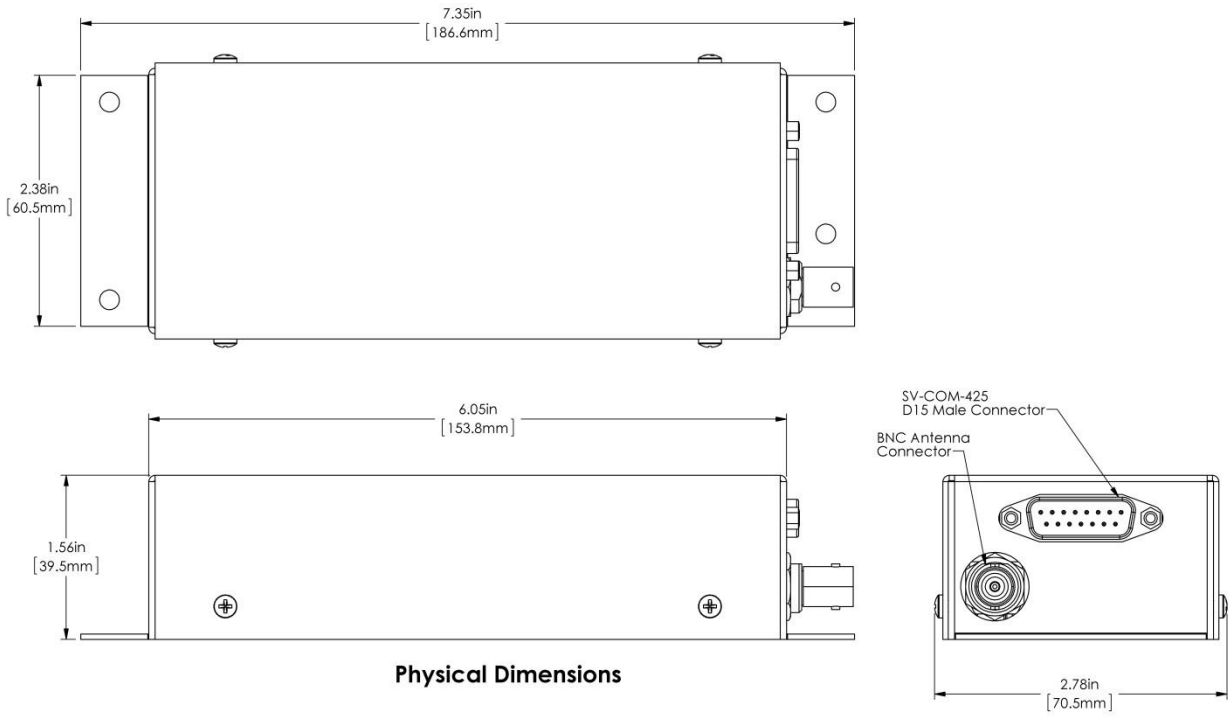

Figure 185 – SV-COM-425 Dimensions – NOT ACTUAL SIZE

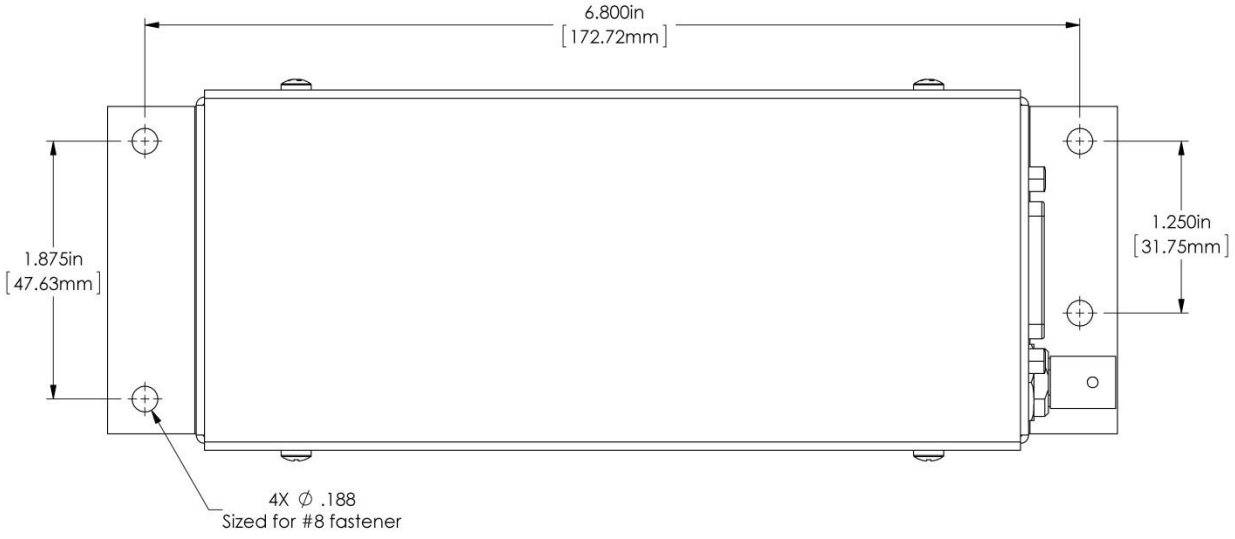

Figure 186 – SV-COM-425 Mounting Hole Pattern – NOT ACTUAL SIZE

Electrical Installation

Use this section in conjunction with the information contained in Appendix C: Wiring and Electrical Connections *(notably Figure 223 on page 23-9).*

Power Input

The SV-COM-C25 is compatible with 12 volt and 24 volt systems (10 to 30 volts DC). Power input is connected to the SV-COM-425, which then supplies power to the SV-COM-PANEL via the 5-wire cable between the two units. See wiring diagrams and pinouts for details.

Audio Signal Grounding

Ensure that audio input and output grounds terminate at a single point - typically the intercom or audio panel. Do not connect an audio input or output ground to aircraft frame ground or a power or data ground. You should run dedicated wires from audio devices to the single point audio input and output ground.

Audio Shielding

Shielded cable must be used for all audio connections. The shield should be connected to ground only at the single point audio ground.

SkyView Network Connectors

The two D9 connectors on the back of a SV-COM-PANEL display are SkyView network connectors. They have identical pinouts and are electrically connected inside the SV-COM-PANEL (i.e., they are completely interchangeable). Installers may use either connector or both connectors in SkyView installations. Using both of these connectors allows installers to “daisy-chain” another SkyView Network module (such as the SV-EMS-22X) that may be co-located behind the panel. Reference Table 117 on page 23-10 for SkyView Network Connector pinout information.

Note that these connectors are not serial port connectors.

Electrical Connections

Harness Construction

Because the SV-COM-C25 (SV-COM-PANEL connected to SV-COM-425) can be mounted in a variety of locations, the harness length requirements will vary from airplane to airplane. Thus, Dynon Avionics does not supply pre-manufactured harnesses for the SV-COM-C25. Instead, your SV-COM-C25 includes connectors and pins to generate a wide variety of harness configurations. Refer to the sections below for detailed wiring information.

Additional harness construction and wiring information can be found in Appendix C: Wiring and Electrical Connections.

The SV-COM-PANEL has two (electrically identical) D9M connectors for connection to SkyView Network and one D15M connector for connection with the SV-COM-425 and an optional Frequency Flip/Flop pushbutton input.

The SV-COM-425 has one D15M connector for connection to the SV-COM-PANEL, power, audio, and Push to Talk (PTT). A single BNC Female connector attaches to the antenna.

SV-COM-PANEL – D15M Pinout

Pin	Function	Notes
1	Power In	From SV-COM-425 Pin 7
2	Ground In	From SV-COM-425 Pin 13
3	Ground Out	Optional - For Grounding Pin 7 (Flip/Flop Switch). Switch may also be grounded locally.
4	Panel RX / 425 TX	From SV-COM-425 Pin 6
5	Panel TX / 425 RX	From SV-COM-425 Pin 14
6	Enable	From SV-COM-425 Pin 3
7	External Flip/Flop (optional)	Push Button Normally Open to Ground (Pin 3 or local ground)
8	No Connection	(Pin not used)
9	No Connection	(Pin not used)
10	No Connection	(Pin not used)
11	No Connection	(Pin not used)
12	No Connection	(Pin not used)
13	No Connection	(Pin not used)
14	No Connection	(Pin not used)
15	No Connection	(Pin not used)

Table 90 – SV-COM-PANEL D15M Pinout

SV-COM-425 – D15M Pinout

Pin	Function	Notes
1	MICROPHONE IN	SV-INTERCOM-2S Pin 25
2	MICROPHONE / PTT GROUND	See diagram below.
3	SV-COM-PANEL ENABLE	To SV-COM-PANEL Pin 6
4	GROUND OUT	Do not connect
5	PTT IN	SV-INTERCOM-2S Pin 12 or Push Button Normally Open (PBNO) to Ground (Pins 4, 11, or 15)
6	DATA TX to SV-COM-PANEL	To SV-COM-PANEL Pin 4
7	SV-COM-PANEL POWER	To SV-COM-PANEL Pin 1
8	POWER IN	10-30V DC @ 5A
9	PHONES GROUND	SV-COM-425 Pin 2 SV-INTERCOM-2S Pin 1 Shielded Cable – shield of Pin 10
10	PHONES OUT	SV-INTERCOM-2S Pin 14 Shielded Cable – center conductor of Pin 10
11	GROUND OUT	Do not connect
12	GROUND IN	Connect to Ground Bus
13	SV-COM-PANEL GROUND	SV-COM-PANEL Pin 2
14	DATA RX from SV-COM-PANEL	SV-COM-PANEL Pin 5
15	GROUND OUT	Do not connect

Table 91 – SV-COM-PANEL D15M Pinout

The following figure depicts how a single SV-COM-C25 is connected to an SV-INTERCOM-2S.

Note that SkyView Network connection(s) on SV-COM-PANEL are not shown, nor are additional connections between the SV-INTERCOM-2S and other devices that it connects to.

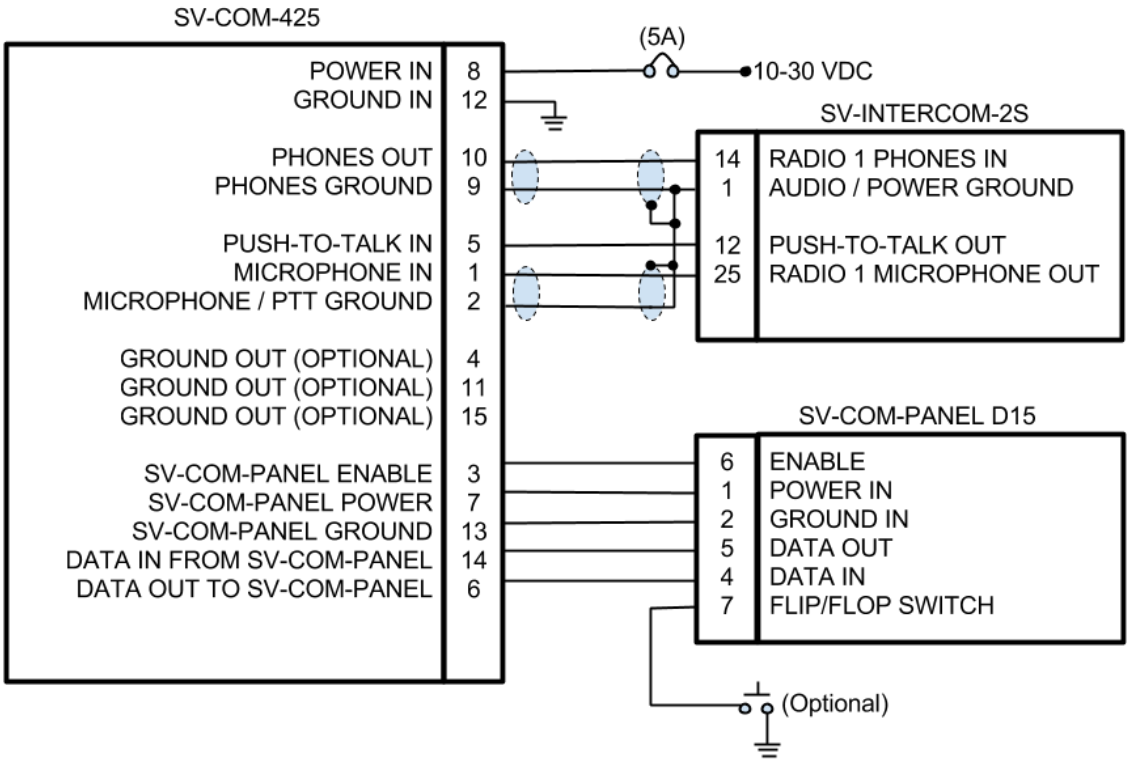

Figure 187 – Single SV-COM-C25 to SV-INTERCOM-2S

Single SV-COM-C25 to SV-INTERCOM-2S Harness Construction Notes

Shielded cable between SV-COM-425 Pins 9 and 10, and SV-INTERCOM-2S Pins 1 and 14:

- This cable consists of *two* wires *plus* shield.
- Use one of the wires to connect SV-COM-425 Pin 10 to SV-INTERCOM-2S Pin 14.
- Use the other wire to connect SV-COM-425 Pin 9 to SV-INTERCOM-2S Pin 1 (see instructions below - Terminating Shielded Cables to Pin 1 of SV-INTERCOM-2S).
- On the SV-COM-425 end, continue the shield as far into the connector as possible until you're forced to pare it back to access the two inner wires. Put some heat shrink tubing over the shield to keep it electrically isolated - the shield at the SV-COM-425 end of this cable is *not* electrically connected at the SV-COM-425.
- On the SV-INTERCOM-2S end, prep the shield into a "pigtail" so that you can solder to it (see below).

Shielded cable between SV-COM-425 Pins 1 and 2, and SV-INTERCOM-2S Pins 1 and 25:

- This cable consists of *two* wires *plus* shield.
- Use one of the wires to connect SV-COM-425 Pin 1 to SV-INTERCOM-2S Pin 25.
- Use the other wire to connect SV-COM-425 Pin 2 to SV-INTERCOM-2S Pin 1 (see instructions below - Terminating Shielded Cables to Pin 1 of SV-INTERCOM-2S).
- On the SV-COM-425 end, continue the shield as far into the connector as possible until you're forced to pare it back to access the two inner wires. Put some heat shrink tubing over the shield to keep it electrically isolated - the shield at the SV-COM-425 end of this cable is *not* electrically connected at the SV-COM-425.
- On the SV-INTERCOM-2S end, prep the shield into a "pigtail" so that you can solder to it (see below).

Terminating Shielded Cables to Pin 1 of SV-INTERCOM-2S

- Four connections terminate into SV-INTERCOM-2S Pin 1:
    - SV-COM-425 Pin 9
    - Shield of the cable from SV-COM-425 Pins 9 and 10
    - SV-COM-425 Pin 2
    - Shield of the cable from SV-COM-425 Pins 1 and 2
- Rather than trying to terminate these four connections directly to the SV-INTERCOM-2S Pin 1, we suggest connecting a wire to Pin 1, then bond all five connections together. One method is to tie-wrap the bundle of wires and shields together, twist the wires together, and solder the five wires and shields. After the solder cools, use heat shrink tubing to insulate the connection.

The following figure depicts connecting a SV-COM-425 directly to a single headset (headphone + microphone) and a Push-To-Talk Switch when no intercom is used in a single-place aircraft.

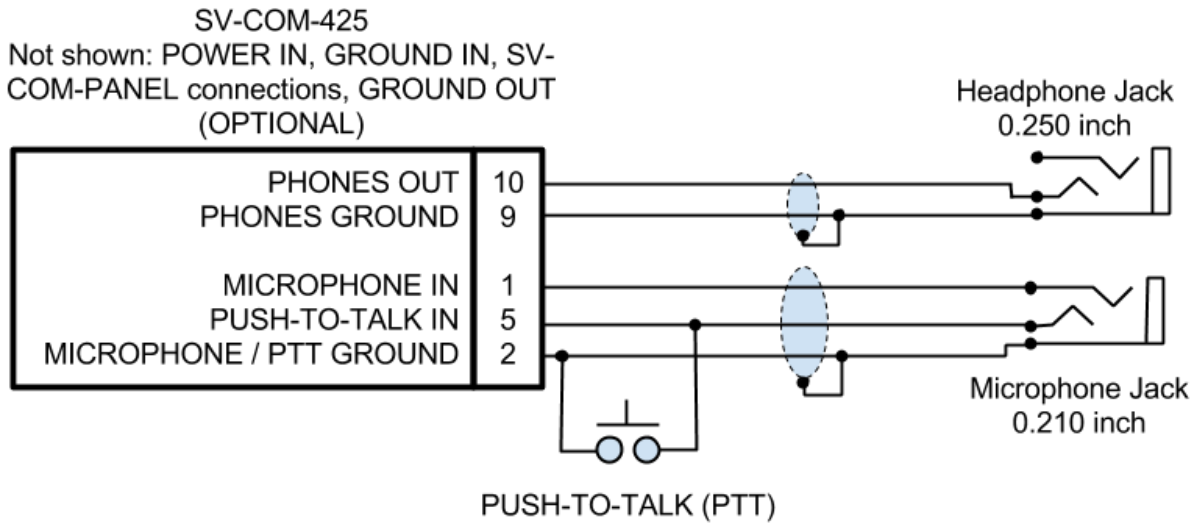

Figure 188 – SV-COM-425 to Headset

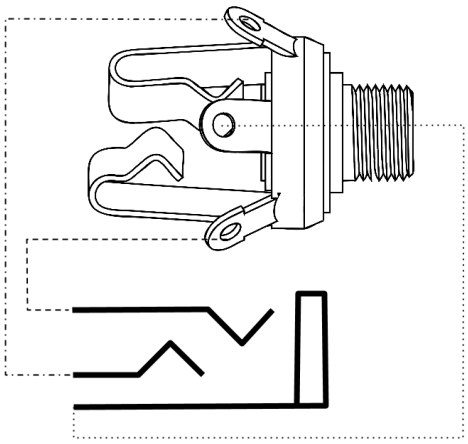

Figure 189 – Headset Jack Schematic Interpretation

Power/Ground Input

The SV-COM-C25 requires 10-30V DC. For wire runs from power distribution to the SV-COM-425 up to 6', 22 AWG wire is sufficient for power and ground wires. For wire runs from power distribution to the SV-COM-425 longer than 6', 20 AWG wire is recommended for power and ground wires. For the cable between the SV-COM-425 and the SV-COM-PANEL, 22 AWG power and ground wire is sufficient. Use a 5 Amp fuse or circuit breaker for power supply protection to each SV-COM-C25.

Power Specifications	Approximate current consumption at 12 volts DC	Approximate current consumption at 24 volts DC
SV-COM-C25 – Transmit	3.0 Amps (average)	1.5 Amps (average)
SV-COM-C25 – Receive	0.2 Amps (average)	0.1 Amps (average)

Table 92 – SV-COM-C25 Power Consumption

SV-COM-425 Pin	SV-COM-PANEL Pin	Notes
3	**6**	ENABLE SV-COM-425 -> SV-COM-PANEL
7	**1**	POWER SV-COM-425 -> SV-COM-PANEL
13	**2**	GROUND SV-COM-425 -> SV-COM-PANEL
14	**5**	DATA OUT SV-COM-PANEL -> SV-COM-425)
6	**4**	DATA IN SV-COM-425 -> SV-COM-PANEL

Table 93 – SV-COM-PANEL to SV-COM-425 Interconnections

Optional Flip / Flop Button

Pin 7 of the SV-COM-PANEL can be connected to a Push Button Normally Open (PBNO) and GROUND. Pushing this button “flip flops” the ACTIVE and STANDBY frequency selection - the same function as pressing in the TUNE knob on the SV-COM-PANEL. Typically, this signal is used with a button on the stick.

Phones / Headset Connections for SV-INTERCOM-2S

SV-COM-425 Pin	SV-INTERCOM-2S Pin	Notes
10	**14**	PHONES OUT Audio signal from radio to headset phones
9	**1**	PHONES GROUND Shield connection for PHONES OUT
5	**12**	PUSH TO TALK IN When connected to GROUND, SV-COM-C25 switches from Receive to Transmit
1	**25**	MICROPHONE IN Audio signal from headset microphone to radio
2	**1**	MICROPHONE / PTT GROUND Shield connection for MICROPHONE IN

Table 94 – Phones / Headset Connections for SV-INTERCOM-2S

To avoid noise, hum, and other undesirable signals, always use shielded cable for any low-level audio signals such as microphone inputs, and connect the shield of the cable as directed.

Antenna Installation

Dynon Avionics does not supply COM antennas, radio coaxial cable, or antenna BNC connectors. The antenna (including coaxial cable and connector) should be installed according to the manufacturer's instructions.

The following considerations should be taken into account when siting the antenna:

- The antenna should be well removed from any projections, the engine(s) and propeller(s). It should also be well removed from landing gear doors, access doors or others openings which will break the ground plane for the antenna.
- Separation of COM antenna(s) from transponder(s) and GPS receivers / antennas: 1 foot (12 inches).
- Separation of COM antenna(s) from Automatic Direction Finder (ADF) or 121.5 MHz Emergency Locator Transmitter (ELT): 4 feet (48 inches)
- Separation of COM antenna from another COM or NAV antenna: Recommended separation between COM antenna(s), NAV antenna(s), and ELT antennas is 6 feet (72 inches). Minimum required separation between antennas is 4 feet (48 inches). Ideally, install the primary COM antenna on the lower fuselage, and install the secondary / standby COM antenna on the upper fuselage.

- The COM antenna(s) should not be installed in close proximity to SkyView displays, modules, or servos to avoid RF interference.
- Where practical, plan the antenna location to keep the cable lengths as short as possible and avoid sharp bends in the cable to minimize the VSWR (voltage standing wave ratio).
- Double-shielded coaxial cable is superior to single shield coax – more of the transmit power will be coupled to the antenna, and less received signal will be lost.
- Electrical connection to the antenna should be protected to avoid loss of efficiency as a result of the presence of liquids or moisture. All antenna feeders shall be installed in such a way that a minimum of RF energy is radiated inside the aircraft.

Antenna Ground Plane

When a conventional aircraft monopole antenna is used it relies on a ground plane for correct behaviour. For ideal performance the ground plane should be very large compared to the wavelength of the transmission, which is approx. 7.5 feet. In a metal skinned aircraft this is usually easy to accomplish, but is more difficult in a composite or fabric skinned aircraft. In such cases, a metallic ground plane should be fabricated and fitted under the antenna.

As the ground plane is made smaller, the actual dimensions of the ground plane become more critical, and small multiples of the wavelength should be avoided, as should circles. Rectangles or squares are much less likely to create a critical dimension that resonates with the transmissions. The thickness of the material used to construct the ground plane is not critical, providing it is sufficiently conductive. A variety of proprietary mesh and grid solutions are available. Heavyweight cooking foil meets the technical requirements, but obviously needs to be properly supported.

Antenna Cable

When routing the cable, ensure that you:

- Route the cable away from sources of heat.
- Avoid routing antenna cables together.
- Route the cable away from potential interference sources such as ignition wiring, 400Hz generators, fluorescent lighting and electric motors.
- Allow a minimum separation of 300 mm (12 inches) from an ADF antenna cable.
- Keep the cable run as short as possible.
- Avoid routing the cable around tight bends.
- Avoid kinking the cable even temporarily during installation.
- Secure the cable so that it cannot interfere with other systems.

SkyView System Settings for SV-COM-C25

Network Setup

As with all other SkyView Network devices, the SV-COM-C25 must be configured into the SkyView Network:

- Go to SETUP MENU > SYSTEM SETUP > SKYVIEW NETWORK SETUP > CONFIGURE > (right click) > DETECT (button).
- The SV-COM-C25 will be listed as SV-COM-PANEL.
- FINISH (button) > EXIT (button)

COM RADIO Setup

To adjust Squelch, Sidetone, and Microphone Gain, go to SETUP MENU > COM RADIO SETUP:

> SQUELCH LEVEL – Adjust squelch level so that the audio is heard during transmissions, and muted when transmissions are not present.

> SIDETONE VOLUME – Adjust for your personal preference of how much microphone audio is heard in the headset when transmitting.

The SV-COM-425's MIC GAIN setting is applied to the microphone audio signal *after* any microphone gain provided by a "powered" headset (especially higher-end noise-cancelling headsets). It may be necessary to *interactively* adjust the headset's microphone gain *and* the SV-COM-425 MIC GAIN setting to result in acceptable audio quality / audio level being transmitted.

For example, an "unpowered" (conventional) headset may require a MIC GAIN setting of 70 for acceptable audio quality / audio level being transmitted. A noise-cancelling headset with a microphone adjustment may require a MIC GAIN setting of 30 for acceptable audio quality / audio level being transmitted.

> MIC GAIN – The default setting of 50 should work for most installations.

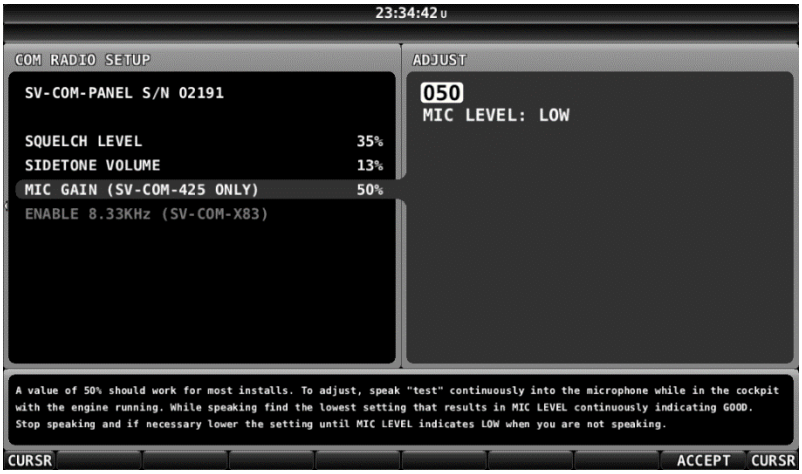

To assist in setting SV-COM-425's microphone gain, the COM RADIO SETUP > MIC GAIN (SV-COM-425 ONLY) menu includes a diagnostic feature (MIC LEVEL: LOW / GOOD / HIGH), as shown on screen:

To adjust, speak "test" continuously into the microphone while in the cockpit with the engine running. While speaking, find the lowest setting that results in MIC LEVEL continuously indicating GOOD. Stop speaking and if necessary lower the setting until MIC LEVEL indicates LOW when you are not speaking.

In practice, a more reliable method to determine the correct setting of MIC GAIN is to ask a helper to listen on another radio while you talk in brief intervals, allowing for other transmissions to be heard by the helper. For such a test to be valid, depending on the particular radio, aircraft, antennas, and terrain (buildings), it may be necessary to have some distance

between you and the helper (being right next to each other will not be a valid test). With the helper listening on your (not heavily in use) test frequency, adjust MIC GAIN slowly up or down, pausing between transmissions.

For example, set MIC GAIN to 55, speak "*Test1, Test2, Test3, Test4, Test5*", then pause a minute or so for other transmissions to be heard. The helper should reply whether your transmission was weaker, or stronger than the other transmissions. If the helper indicated your transmission was stronger than the other transmissions, adjust MIC GAIN lower, and do another set of transmissions. When the helper hears your audio to be about the same volume as the other transmissions, MIC GAIN is set correctly.

If other people report that your transmissions fade off at the end or can't be heard at all, you may need increase MIC GAIN. If your transmissions are reported to sound "hollow", "robotic" or if they have a lot of background noise, you may need to decrease MIC GAIN. Also note these issues can only be heard on real transmissions by third parties.

The audio you hear in your headset (Sidetone) when you transmit is unaffected by the MIC GAIN setting. As explained above, the best method to set MIC GAIN correctly is to work with a helper who is listening to your transmissions on a different radio.

Displayed COM (Top Bar)

The status of one COM radio can be displayed on the top bar. The radio that is selected here is also the radio that you can send airports and frequencies to via SkyView's Map Menu APT>COM and TUNE COM buttons. See the SkyView Pilot's User Guide for additional details.

- Go to SETUP MENU > SYSTEM SETUP > DISPLAYED COM and select which COM radio status to display on the Top Bar (or NONE). (To display status of a non-Dynon Avionics radio, a serial port connection must be installed FROM the radio TO the SkyView display(s).

Post Installation Checks

- On ground
    - Do all SV-COM-PANEL buttons and knobs function normally?
    - Verify dim commands from SkyView display dim the backlighting of the SV-COM-PANEL.
    - Does the (optional) FLIP/FLOP pushbutton swap the STBY and COM frequencies?
    - Does pushing the PTT switch cause the SV-COM-C25 to transmit (only) when pushed?

Do not transmit without an antenna connected. Doing so will damage your SV-COM-C25.

- (Optional, if two SV-COM-C25s installed) Does the PTT Select Switch cause only the selected radio to transmit when PTT switch is pushed?
- Temporarily install a VSWR meter between the SV-COM-C25 and the antenna. Using brief test transmissions, is the VSWR 3:1 or below? A good installation should have VSWR of 2:1 or even 1:1. *The maximum acceptable VSWR for SV-COM-C25 is 3:1.*
- When transmitting on SV-COM-C25, is there any interference to other aircraft systems?
- Power off the SkyView display(s) by pushing and holding Button #1 on the display. The SV-COM-C25 should continue to operate normally, with the exception that auto-population of the buttons frequencies will not occur, and a NO SV error message will appear approx. 3 seconds after SV is not operating.

- In Flight
  - Does the SV-COM-C25 receive other aircraft and ground transmissions at reasonable ranges?
  - Does the SV-COM-C25 receive other aircraft and ground transmissions equally well at the low end, middle, and high end of the Aviation band?
  - Is received audio clear at most volume levels on the SV-COM-C25? (Distortion at high volume levels is normal.)
  - Are transmissions from the SV-COM-C25 heard by others at reasonable ranges? (Keep in mind that the power output of the SV-COM-C25 is 6 watts.)
  - Are transmissions from the SV-COM-C25 clear (when received by others)?

Continued Airworthiness and Maintenance

- Periodically inspect the COM antenna for wear and weather-tight seal to the fuselage. Water intrusion could corrode the antenna connection.
- As with all wiring, periodically inspect the COM antenna's coaxial cable for wear; repair or replace if significant wear is found.
- Periodic function checks as required by your aviation authority.

17. SV-COM-X25 and SV-COM-X83 Installation and Configuration

The SV-COM-X25 is a complete radio system with 25 kHz tuning that consists of an SV-COM-PANEL control panel installed on the instrument panel and an SV-COM-T25 transceiver installed elsewhere.

The SV-COM-X83 is a complete radio system with 8.33 kHz or 25 kHz tuning that consists of an SV-COM-PANEL control panel installed on the instrument panel and an SV-COM-T8 transceiver installed elsewhere.

Installation instructions for the SV-INTERCOM-2S (referenced in these instructions) has its own, separate manual with much more technical detail than is included in this guide, available for download at http://docs.dynonavionics.com.

Do not transmit without an antenna connected. Doing so will damage your SV-COM-X25/X83.

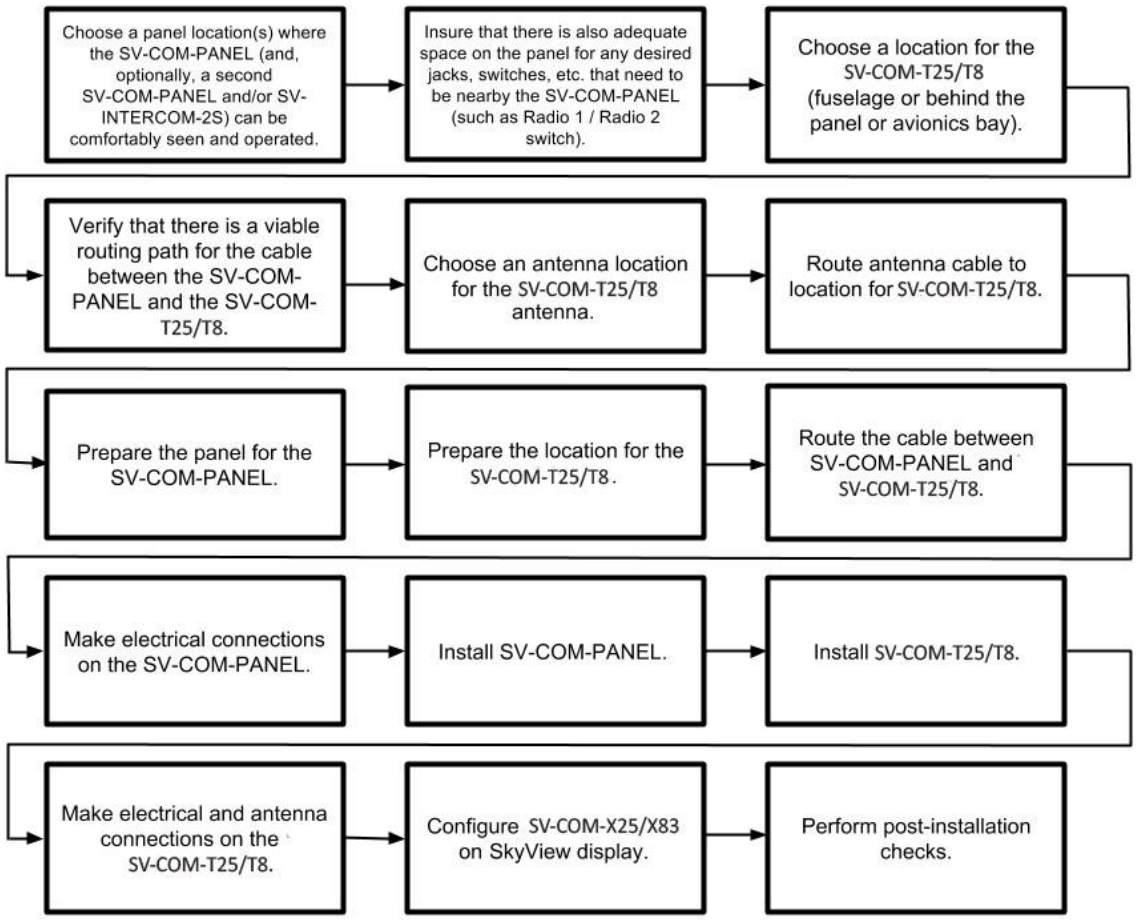

Figure 190 – Suggested SV-COM-X25/X83 Installation, Configuration, and Testing Procedure

Considerations for SV-COM-X83

The SV-COM-T8 VHF COM Transceiver Module is supplied to Dynon Avionics by Trig Avionics Limited and is derived from the Trig TY91 VHF radio system. The TY91 VHF radio unit supplied by Trig communicates only with the TC90 Front Panel Controller. The Dynon Avionics SV-COM-T8 communicates only with the Dynon Avionics SV-COM-PANEL. Modifications to the TY91 to create the SV-COM-T8 involved only control and interface – the transmitter/receiver sections were not modified.

The TY91/TC90 is an ED-23C compliant class C (25 kHz offset carrier) and class E (8.33 kHz single carrier) VHF radio. The TY91 has a nominal power output of 6 watts and meets the power output requirements for Class 4 and Class 6. The TY91/TC90 combination is certified to ETSO 2C169a 2C128a, TSO C169a and TSO C128a.

Note that the SV-COM-PANEL control panel is not certified. It is the installer's responsibility to determine the suitability of the SV-COM-X83 for use in the intended locale.

Physical Installation: SV-COM-PANEL

The figures on the following pages show recommended panel cutouts, mounting hole patterns, and mechanical dimension for the SV-COM-PANEL/V (vertical) and SV-COM-PANEL/H (horizontal). Use these diagrams to plan for the space required by the display.

SV-COM-PANEL Dimensions

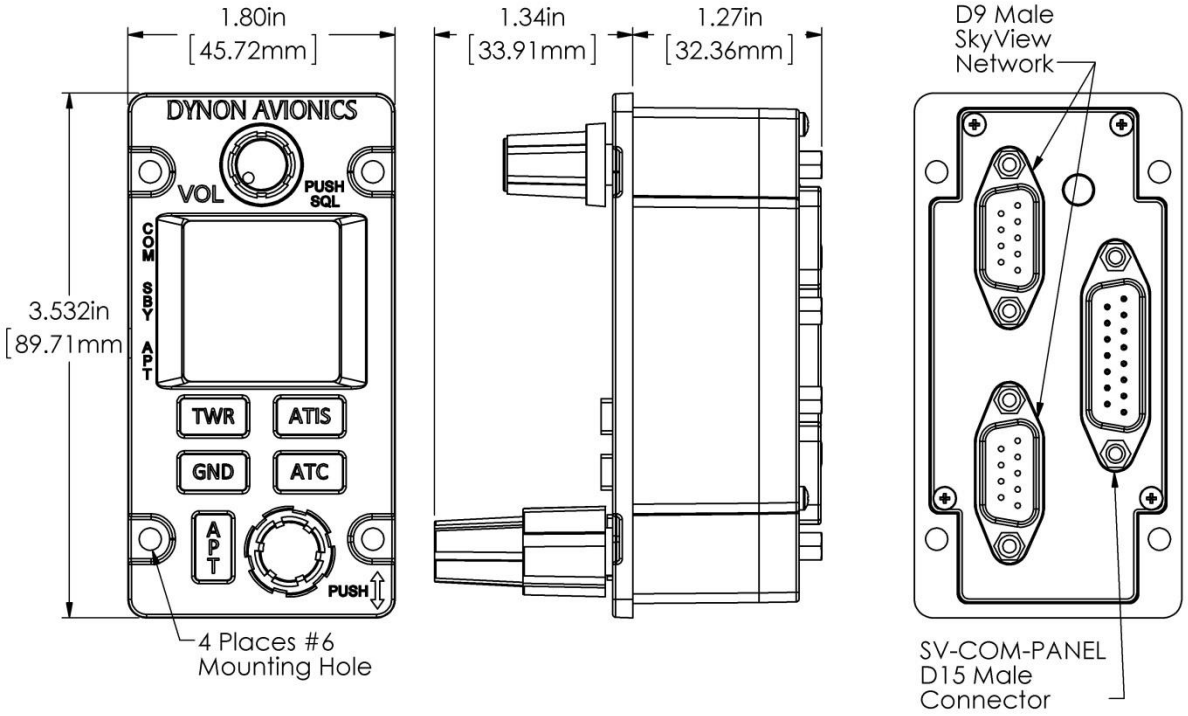

Figure 191 – SV-COM-PANEL Dimensions

Physical Installation

SV-COM-PANEL – VERTICAL Installation Dimension Quick Overview

- Panel Cutout: (irregular – see drawing)
- Bezel Outline: 1.80” W x 3.532” T (45.72 mm W x 89.71 mm T)
- Note that the SV-COM-PANEL/V is sized such that two units can be stacked to the same height as the height of an SV-D1000 display.

SV-COM-PANEL - HORIZONTAL Installation Dimension Quick Overview

- Panel Cutout: (irregular – see drawing)
- Bezel Outline: 3.532” W x 1.80” T (89.71 mm W x 45.72 mm T)

To mount an SV-COM-PANEL, cut the opening in your panel, drill out the mounting holes, install nutplates, and use the included mounting screws to fasten the display to the panel.

The SV-COM-X25/X83 is shipped with #6-32 hex-drive round head fasteners. Fasteners are 5/8” long and require a 5/64” hex drive tool. Dynon Avionics recommends fastening the included mounting screws to nut plates installed behind the panel. If access behind the panel allows, standard #6-32 lock nuts or nuts with lock washers can be used. *Do not rivet the SV-COM-PANEL to the panel as this will hinder future removal if necessary.*

Mounting Dimensions

The following diagrams are NOT to scale. However, paper templates are included with your SV-COM-X25/X83 and may also be downloaded from http://docs.dynonavionics.com.

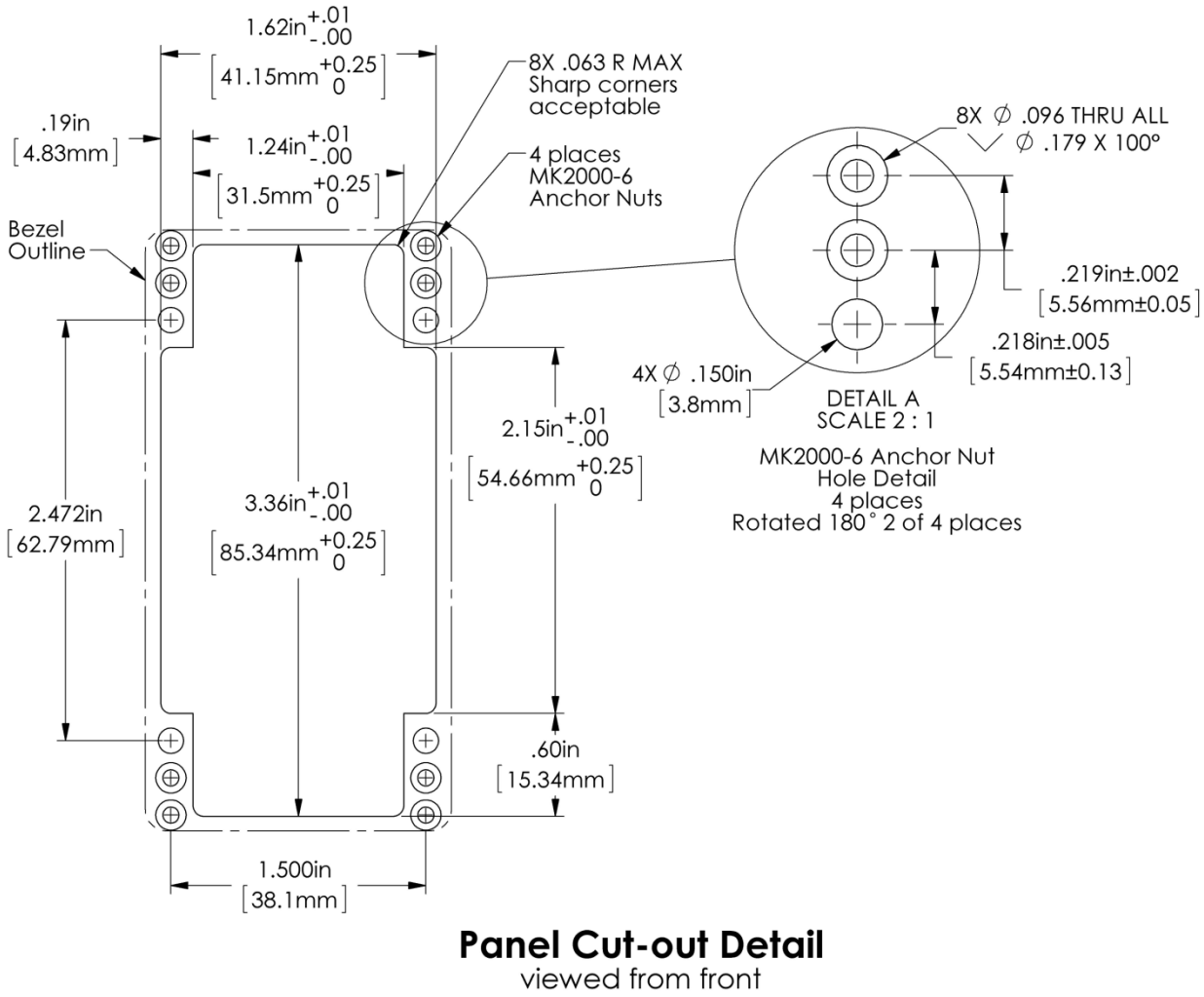

Figure 192 – SV-COM-PANEL - VERTICAL Panel Cutout and Mounting Hole Dimensions - NOT ACTUAL SIZE

Physical Installation: SV-COM-T25 and SV-COM-T8

The figures on the following pages show mechanical dimensions for the SV-COM-T25/T8.

The following installation procedure should be followed to install an SV-COM-T25/T8 remote transceiver module, remembering to allow adequate space for installation of cables and connectors.

- If you are installing two SV-COM-X25/X83s, or combination thereof, it is acceptable to co-locate the two transceiver modules.
- Select a position in the aircraft for the SV-COM-T25/T8 that is not too close to any high external heat source and where reasonable airflow is available. The SV-COM-T25/T8 is not a significant heat source itself and does not need to be kept away from other devices for this reason.
- Avoid sharp bends and placing the cables too near to the aircraft control cables.
- Secure the SV-COM-T25/T8 to the aircraft via the three (3) mounting holes in the plate. The unit should be mounted to a flat surface – it is important that the tray is supported at the dimples as well as the three mounting points.
- Put the SV-COM-T25/T8 into the secured mounting tray by hooking the connector end under the lip on the tray.
- Lock the SV-COM-T25/T8 into the mounting tray by clipping the retaining wire over the lugs on the opposite end.

Additional items you will require for installation of an SV-COM-X25/X83, but which are not in the packaging, include:

- Nutplates for mounting SV-COM-PANEL to the panel
- To secure the SV-COM-T25/T8 tray to the airframe you will need least 3 flat head screws and three self-locking nuts. If the aircraft does not have existing mounting provisions you may need to fabricate additional brackets to support the tray.
- Circuit breaker or fuse for power to the SV-COM-T25/T8 and SV-COM-PANEL
- Power wires to SV-COM-T25/T8.
- SV-COM-T25/T8 to SV-COM-PANEL wiring.
- SkyView Network cables to connect the SV-COM-PANEL to SkyView Network
- COM Antenna, coaxial cable, terminated to TNC Male connector or cable and TNC Male connector is included with your COM antenna. The SV-COM-X25/X83 are compatible with aircraft COM antennas commonly available (may require a TNC Male to BNC Female adapter).

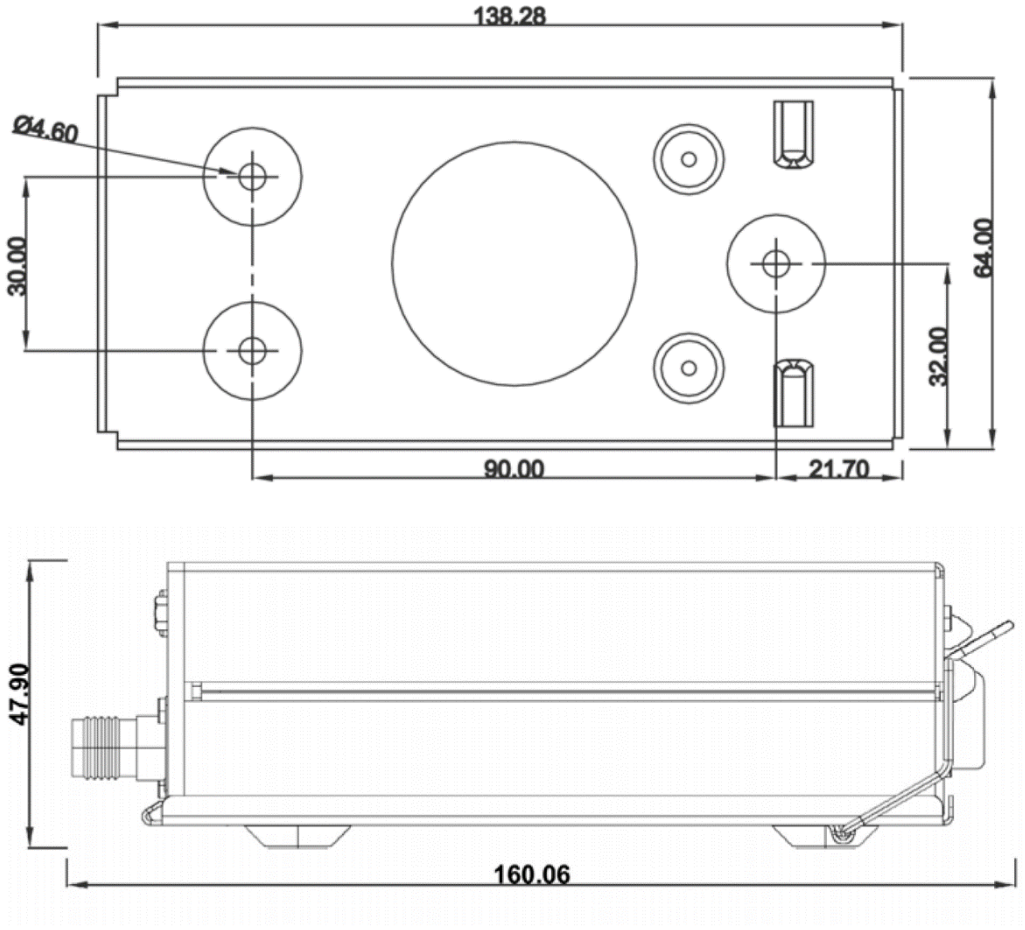

Figure 193 – SV-COM-T25/T8 Dimensions – NOT ACTUAL SIZE

Electrical Installation

Use this section in conjunction with the information contained in Appendix C: Wiring and Electrical Connections *(notably Figure 223 on page 23-9).*

Power Input

When the voltage supplied to the SV-COM-X25/X83 is below 11V, the transmit power will be reduced below the nominal output of 6 watts.

The SV-COM-X25/X83 is compatible with 12 volt and 24 volt systems (10 to 30 volts DC). Power input is connected to the SV-COM-T25/T8 and the SV-COM-PANEL. See wiring diagrams and pinouts for details. Note that on the SV-COM-T25/T8 there are two pins for POWER input (Pins 24 and 25) and two pins for GROUND (Pins 19 and 22). Use BOTH Pins 24 and 25 for POWER input to the transceiver and use BOTH Pins 19 and 22 for GROUND to the transceiver.

Audio Signal Grounding

Ensure that audio input and output grounds terminate at a single point - typically the intercom or audio panel. Do not connect an audio input or output ground to aircraft frame ground or a power or data ground. You should run dedicated wires from audio devices to the single point audio input and output ground.

Audio Shielding

Shielded cable must be used for all audio connections. The shield should be connected to ground only at the single point audio ground.

SkyView Network Connectors

The two D9 connectors on the back of an SV-COM-PANEL display are SkyView network connectors. They have identical pinouts and are electrically connected inside the SV-COM-PANEL (i.e., they are completely interchangeable). Installers may use either connector or both connectors in SkyView installations. Using both connectors allows installers to “daisy-chain” another SkyView Network module (such as the SV-EMS-22X) that may be co-located behind the panel. Reference Table 117 on page 23-10 for SkyView Network Connector pinout information.

Note that these connectors are not serial port connectors.

Electrical Connections

Harness Construction

Because the SV-COM-X25/X83 (SV-COM-PANEL connected to an SV-COM-T25/T8) can be mounted in a variety of locations, the harness length requirements will vary from airplane to airplane. Thus, Dynon Avionics does not supply pre-manufactured harnesses for the SV-COM-X25/X83. Instead, your SV-COM- X25/X83 includes connectors and pins to generate a wide variety of harness configurations. Refer to the sections below for detailed wiring information.

Additional harness construction and wiring information can be found in Appendix C: Wiring and Electrical Connections.

The SV-COM-PANEL has two (electrically identical) D9M connectors for connection to SkyView Network and one D15M connector for connection with the SV-COM-T25/T8 and an optional Frequency Flip/Flop pushbutton input.

The SV-COM-T25/T8 have one D25M connector for connection to the SV-COM-PANEL, power, audio, and Push to Talk (PTT). A single TNC Female connector attaches to the antenna.

SV-COM-PANEL – D15M Pinout

Pin	Function	Notes
1	POWER IN	10-30V DC @ 5A
2	GROUND IN	Connect to Ground Bus
3	Ground Out	Optional - For Grounding Pin 7 (Flip/Flop Switch). Switch may also be grounded locally.
4	Panel RX / Transceiver TX	Connect to SV-COM-T25/T8 Pin 6
5	Panel TX / Transceiver RX	Connect to SV-COM-T25/T8 Pin 5
6	Enable	Connect to SV-COM-T25/T8 Pin 13
7	External Flip/Flop (optional)	Push Button Normally Open to Ground (Pin 3 or local ground)
8	No Connection	(Pin not used)
9	No Connection	(Pin not used)
10	No Connection	(Pin not used)
11	No Connection	(Pin not used)
12	No Connection	(Pin not used)
13	No Connection	(Pin not used)
14	No Connection	(Pin not used)
15	No Connection	(Pin not used)

Table 95 – SV-COM-PANEL D15M Pinout

SV-COM-T8 – D25M Pinout

Pin	Function	Notes
1	PHONES GROUND	Connect to SV-INTERCOM-2S Pin 1 (Inside shielded cable)
2	PHONES OUT	Connect to SV-INTERCOM-2S Pin 14 (Inside shielded cable)
3	No connection	Do not connect
4	No connection	Do not connect
5	DATA RX from SV-COM-PANEL	Connect to SV-COM-PANEL Pin 5
6	DATA TX to SV-COM-PANEL	Connect to SV-COM-PANEL Pin 4
7	No connection	Do not connect
8	No connection	Do not connect
9	MICROPHONE / PTT GROUND	Connect to SV-INTERCOM-2S Pin 1 See diagram below
10	GROUND	Do not connect
11	No connection	Do not connect
12	No connection	Do not connect
13	SV-COM-PANEL ENABLE	Connect to SV-COM-PANEL Pin 6
14	No connection	Do not connect
15	PTT IN	Connect to SV-INTERCOM-2S Pin 12 or Push Button Normally Open (PBNO) to Ground (Pin 9)
16	No connection	Do not connect
17	No connection	Do not connect
18	TRANSMIT INTERLOCK	(Use only when there are two SV-COM-X25s/X83s installed.) Connect to the other radio's PTT.
19	GROUND IN	Connect to Ground Bus
20	No connection	Do not connect
21	No connection	Do not connect
22	GROUND IN	Connect to Ground Bus
23	MICROPHONE IN	Connect to SV-INTERCOM-2S Pin 25 (Inside shielded cable)
24	POWER IN	10-30V DC @ 5A
25	POWER IN	10-30V DC @ 5A

Table 96 – SV-COM-T25/T8 D25M Pinout

The following figure depicts how a single SV-COM-T25/T8 is connected to an SV-INTERCOM-2S. Note that SkyView Network connection(s) on SV-COM-PANEL are *not shown*, nor are additional connections between the SV-INTERCOM-2S and other devices that it connects to.

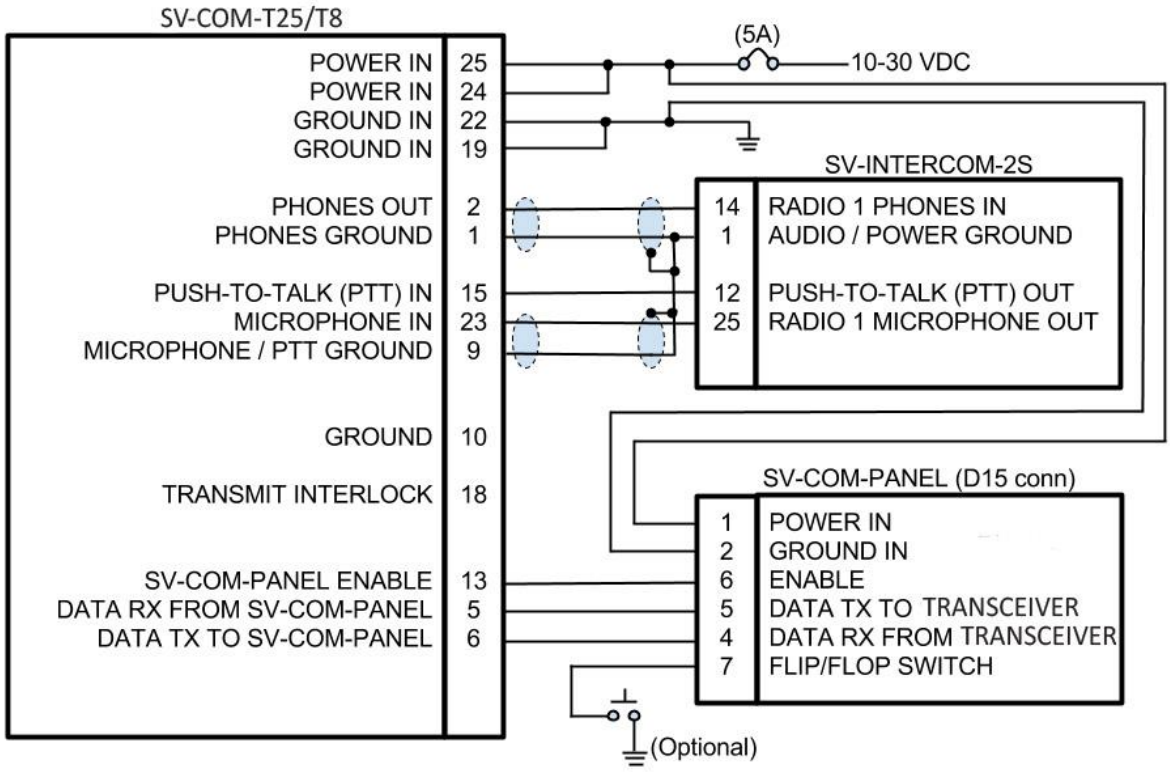

Figure 194 – Single SV-COM-T25/T8 to SV-INTERCOM-2S

Single SV-COM-X25/X83 to SV-INTERCOM-2S Harness Construction Notes

Shielded cable between SV-COM-T25/T8 Pins 2 and 1, and SV-INTERCOM-2S Pins 1 and 14:

- This cable consists of *two* wires *plus* shield.
- Use one of the wires to connect SV-COM-T25/T8 Pin 2 to SV-INTERCOM-2S Pin 14.
- Use the other wire to connect SV-COM-T25/T8 Pin 1 to SV-INTERCOM-2S Pin 1 (see instructions below - Terminating Shielded Cables to Pin 1 of SV-INTERCOM-2S).
- On the SV-COM-T25/T8 end, continue the shield as far into the connector as possible until you're forced to pare it back to access the two inner wires. Put some heat shrink tubing over the shield to keep it electrically isolated - the shield at the SV-COM-T25/T8 end of this cable is *not* electrically connected at the SV-COM-T25/T8.
- On the SV-INTERCOM-2S end, prep the shield into a "pigtail" so that you can solder to it (see below).

Shielded cable between SV-COM-T25/T8 Pins 23 and 9, and SV-INTERCOM-2S Pins 1 and 25:

- This cable consists of *two* wires *plus* shield.
- Use one of the wires to connect SV-COM-T25/T8 Pin 23 to SV-INTERCOM-2S Pin 25.
- Use the other wire to connect SV-COM-T25/T8 Pin 9 to SV-INTERCOM-2S Pin 1 (see instructions below - Terminating Shielded Cables to Pin 1 of SV-INTERCOM-2S).
- On the SV-COM-T25/T8 end, continue the shield as far into the connector as possible until you're forced to pare it back to access the two inner wires. Put some heat shrink tubing over the shield to keep it electrically isolated - the shield at the SV-COM-T25/T8 end of this cable is *not* electrically connected at the SV-COM-T25/T8.
- On the SV-INTERCOM-2S end, prep the shield into a "pigtail" so that you can solder to it (see below).

Terminating Shielded Cables to Pin 1 of SV-INTERCOM-2S

- Four connections terminate into SV-INTERCOM-2S Pin 1:
  - SV-COM-T25/T8 Pin 1
  - Shield of the cable from SV-COM-T25/T8 Pins 1 and 2
  - SV-COM-T25/T8 Pin 9
  - Shield of the cable from SV-COM-T25/T8 Pins 23 and 9
- Rather than trying to terminate these four connections directly to the SV-INTERCOM-2S Pin 1, we suggest connecting a wire to Pin 1, then bond all five connections together. One method is to tie-wrap the bundle of wires and shields together, twist the wires together, and solder the five wires and shields. After the solder cools, use heat shrink tubing to insulate the connection. The following figure depicts how dual SV-COM-T25/T8s are connected to an SV-INTERCOM-2S. Note that the additional connections between the SV-INTERCOM-2S and other devices that it connects to are not shown. Note that the associated SV-COM-PANELs are also not shown; there are no changes in the SV-COM-PANEL to SV-COM-T25/T8 wiring from the single SV-COM-T25/T8 to SV-INTERCOM-2S previously shown.

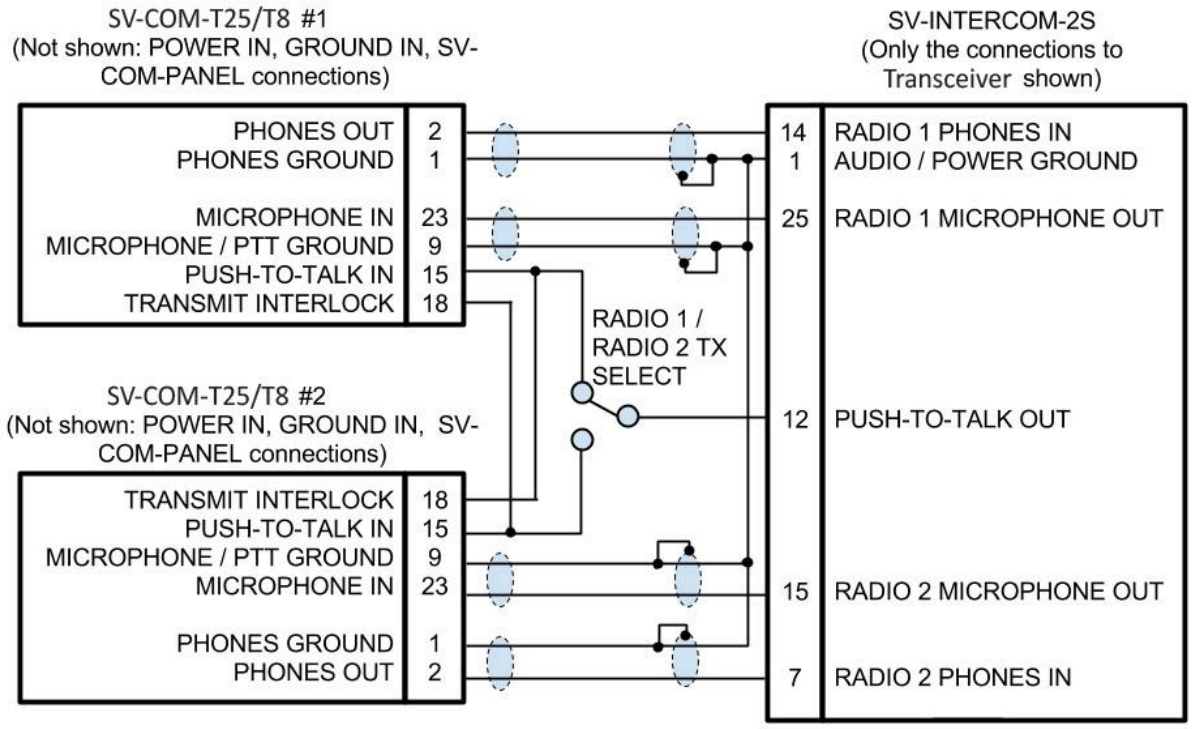

Figure 195 – Dual SV-COM-T25/T8s to SV-INTERCOM-2S

Transmit Interlock

When two SV-COM-X25/X83 radios are installed, the TRAMIT INTERLOCK pin can be connected to reduce “break-through” (noise being heard as the squelch opens) in one COM radio when the other COM radio is transmitting. The PTT IN signal (Pin 15) is connected to the TRANSMIT INTERLOCK (Pin 18) of the other radio, as shown above.

Dual SV-COM-T25/T8 to SV-INTERCOM-2S Harness Construction Notes

Shielded cable between *SV-COM-T25/T8 #1* Pins 1 and 2, and SV-INTERCOM-2S Pins 1 and 14:

- This cable consists of *two* wires *plus* shield.
- Use one of the wires to connect SV-COM-T25/T8 #1 Pin 2 to SV-INTERCOM-2S Pin 14.
- Use the other wire to connect SV-COM-T25/T8 #1 Pin 1 to SV-INTERCOM-2S Pin 1 (see instructions below - Terminating Shielded Cables to Pin 1 of SV-INTERCOM-2S).
- On the SV-COM-T25/T8 #1 end, continue the shield as far into the connector as possible until you're forced to pare it back to access the two inner wires. Put some heat shrink tubing over the shield to keep it electrically isolated - the shield at the SV-COM-T25/T8 #1 end of this cable is *not* electrically connected at SV-COM-T25/T8 #1.
- On the SV-INTERCOM-2S end, prep the shield into a "pigtail" so that you can solder to it (see instructions below - Terminating Shielded Cables to Pin 1 of SV-INTERCOM-2S).

Shielded cable between *SV-COM-T25/T8 #1* Pins 23 and 9, and SV-INTERCOM-2S Pins 1 and 25:

- This cable consists of *two* wires *plus* shield.
- Use one of the wires to connect *SV-COM-T25/T8 #1* Pin 23 to SV-INTERCOM-2S Pin 25.
- Use the other wire to connect *SV-COM-T25/T8 #1* Pin 9 to SV-INTERCOM-2S Pin 1 (see instructions below - Terminating Shielded Cables to Pin 1 of SV-INTERCOM-2S).
- On the *SV-COM-T25/T8 #1* end, continue the shield as far into the connector as possible until you're forced to pare it back to access the two inner wires. Put some heat shrink tubing over the shield to keep it electrically isolated - the shield at the *SV-COM-T25/T8 #1* end of this cable is *not* electrically connected at *SV-COM-T25/T8 #1*.
- On the SV-INTERCOM-2S end, prep the shield into a "pigtail" so that you can solder to it (see instructions below - Terminating Shielded Cables to Pin 1 of SV-INTERCOM-2S).

Shielded cable between *SV-COM-T25/T8 #2* Pins 1 and 2, and SV-INTERCOM-2S Pins 1 and 7:

- This cable consists of *two* wires *plus* shield.
- Use one of the wires to connect *SV-COM-T25/T8 #2* Pin 2 to SV-INTERCOM-2S Pin 7.
- Use the other wire to connect *SV-COM-T25/T8 #2* Pin 1 to SV-INTERCOM-2S Pin 1 (see instructions below - Terminating Shielded Cables to Pin 1 of SV-INTERCOM-2S).
- On the *SV-COM-T25/T8 #2* end, continue the shield as far into the connector as possible until you're forced to pare it back to access the two inner wires. Put some heat shrink tubing over the shield to keep it electrically isolated - the shield at the *SV-COM-T25/T8 #2* end of this cable is *not* electrically connected at *SV-COM-T25/T8 #2*.
- On the SV-INTERCOM-2S end, prep the shield into a "pigtail" so that you can solder to it (see instructions below - Terminating Shielded Cables to Pin 1 of SV-INTERCOM-2S).

Shielded cable between *SV-COM-T25/T8 #2* Pins 23 and 9, and SV-INTERCOM-2S Pins 1 and 15:

- This cable consists of *two* wires *plus* shield.
- Use one of the wires to connect *SV-COM-T25/T8 #2* Pin 23 to SV-INTERCOM-2S Pin 15.
- Use the other wire to connect *SV-COM-T25/T8 #2* Pin 9 to SV-INTERCOM-2S Pin 1 (see instructions below - Terminating Shielded Cables to Pin 1 of SV-INTERCOM-2S).
- On the *SV-COM-T25/T8 #2* end, continue the shield as far into the connector as possible until you're forced to pare it back to access the two inner wires. Put some heat shrink tubing over the shield to keep it electrically isolated - the shield at the *SV-COM-T25/T8 #2* end of this cable is *not* electrically connected at *SV-COM-T25/T8 #2*.
- On the SV-INTERCOM-2S end, prep the shield into a "pigtail" so that you can solder to it (see instructions below - Terminating Shielded Cables to Pin 1 of SV-INTERCOM-2S).

Terminating Shielded Cables to Pin 1 of SV-INTERCOM-2S

- *Eight* connections terminate into SV-INTERCOM-2S Pin 1:
  - *SV-COM-T25/T8 #1* Pin 1
  - Shield of the cable from *SV-COM-T25/T8 #1* Pins 1 and 2
  - *SV-COM-T25/T8 #1* Pin 9

- Shield of the cable from *SV-COM-T25/T8 #1* Pins 23 and 9
- *SV-COM-T25/T8 #2* Pin 1
- Shield of the cable from *SV-COM-T25/T8 #2* Pins 1 and 2
- *SV-COM-T25/T8 #2* Pin 9
- Shield of the cable from *SV-COM-T25/T8 #2* Pins 23 and 9

Rather than trying to terminate these eight connections directly to SV-INTERCOM-2S Pin 1, we suggest connecting a wire to Pin 1, then bond all *nine* connections together. One method is to tie-wrap the bundle of wires and shields together, twist the wires together, and solder the nine wires and shields. After the solder cools, use heat shrink tubing to insulate the connection. The following figure depicts connecting an SV-COM-T25/T8 directly to a single headset (headphone + microphone) and a Push-To-Talk Switch when no intercom is used in a single-place aircraft.

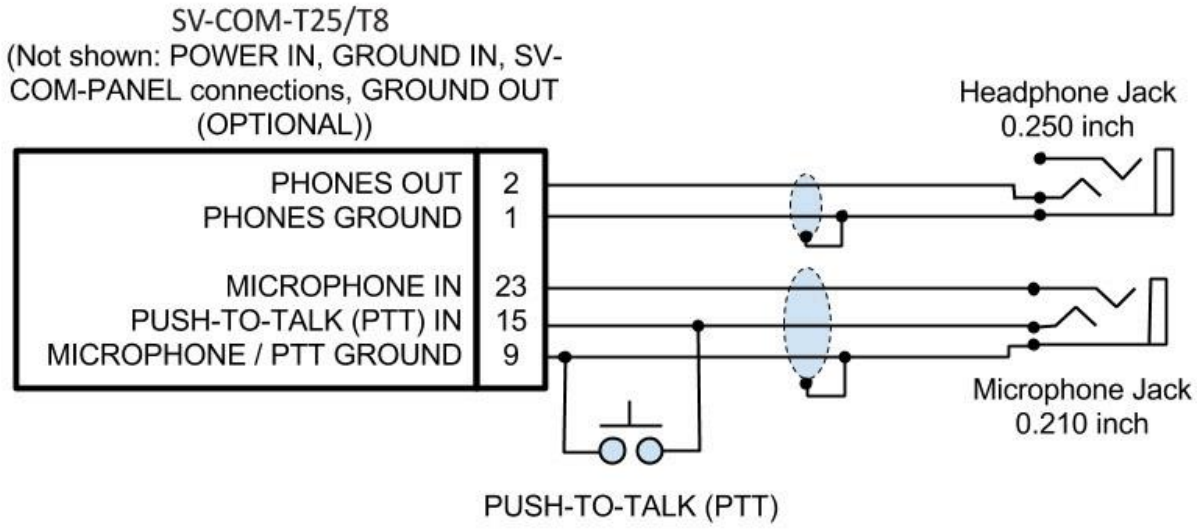

Figure 196 – SV-COM-T25/T8 to Headset

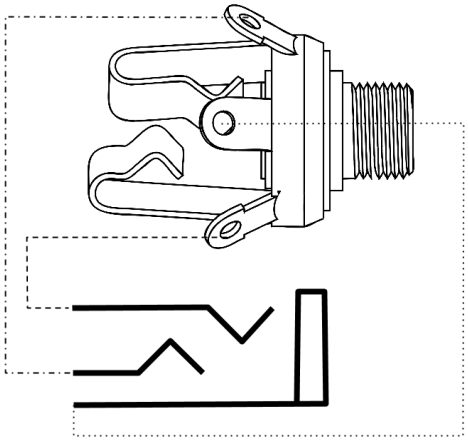

Figure 197 – Headset Jack Schematic Interpretation

Power/Ground Input

The SV-COM-T25/T8 and SV-COM-PANEL require 10-30V DC. 20 AWG wire is recommended for power and ground wires for the SV-COM-T25/T8. For all other connections, 22 AWG wire is recommended.

SV-COM-T25/T8 Pin	SV-COM-PANEL Pin	Notes
13	**6**	ENABLE SV-COM-T25/T8 -> SV-COM-PANEL
5	**5**	DATA OUT SV-COM-PANEL -> SV-COM-T25/T8)
6	**4**	DATA IN SV-COM-T25/T8 -> SV-COM-PANEL

Table 97 – SV-COM-PANEL to SV-COM-T25/T8 Interconnections

Optional Flip / Flop Button

Pin 7 of the SV-COM-PANEL can be connected to a Push Button Normally Open (PBNO) and GROUND. Pushing this button “flip flops” the ACTIVE and STANDBY frequency selection - the same function as pressing in the TUNE knob on the SV-COM-PANEL. Typically, this signal is used with a button on the stick.

Phones / Headset Connections for SV-INTERCOM-2S

SV-COM-T25/T8 Pin	SV-INTERCOM-2S Pin	Notes
2	**14**	PHONES OUT Audio signal from radio to headset phones
1	**1**	PHONES GROUND Shield connection for PHONES OUT
15	**12**	PUSH TO TALK IN When connected to GROUND, SV-COM-X25/X83 switches from Receive to Transmit
23	**25**	MICROPHONE IN Audio signal from headset microphone to radio
9	**1**	MICROPHONE / PTT GROUND Shield connection for MICROPHONE IN

Table 98 – Phones / Headset Connections for SV-INTERCOM-2S

To avoid noise, hum, and other undesirable signals, always use shielded cable for any low-level audio signals such as microphone inputs and connect the shield of the cable as directed.

Antenna Installation

Dynon Avionics does not supply COM antennas, radio coaxial cable, or antenna TNC connectors. The antenna (including coaxial cable and connector) should be installed according to the manufacturer's instructions.

The following considerations should be taken into account when siting the antenna:

- If two COM radios (including SV-COM-X25 or SV-COM-X83) are installed, the two COM antennas should be installed as far apart as practical, ideally installing one COM antenna on the upper fuselage and the other COM antenna on the lower fuselage.
- The antenna should be well removed from any projections, the engine(s) and propeller(s). It should also be well removed from landing gear doors, access doors or other openings which will break the ground plane for the antenna.
- Separation of COM antenna(s) from transponder(s) and GPS receivers / antennas: 2 feet (24 inches).
- Separation of COM antenna(s) from Automatic Direction Finder (ADF) or 121.5 MHz Emergency Locator Transmitter (ELT): 4 feet (48 inches)

- Separation of COM antenna from another COM or NAV antenna: Recommended separation between COM antenna(s), NAV antenna(s), and ELT antennas is 6 feet (72 inches). Minimum required separation between antennas is 4 feet (48 inches). Ideally, install the primary COM antenna on the lower fuselage, and install the secondary / standby COM antenna on the upper fuselage.
- The COM antenna(s) should not be installed in close proximity to SkyView displays, modules, or servos to avoid RF interference.
- Where practical, plan the antenna location to keep the cable lengths as short as possible and avoid sharp bends in the cable to minimize the VSWR (voltage standing wave ratio).
- Double-shielded coaxial cable is superior to single shield coax – more of the transmit power will be coupled to the antenna, and less received signal will be lost.
- Electrical connection to the antenna should be protected to avoid loss of efficiency as a result of the presence of liquids or moisture. All antenna feeders shall be installed in such a way that a minimum of RF energy is radiated inside the aircraft.

Antenna Ground Plane

When a conventional aircraft monopole antenna is used it relies on a ground plane for correct behaviour. For ideal performance the ground plane should be very large compared to the wavelength of the transmission, which is approx. 7.5 feet. In a metal skinned aircraft this is usually easy to accomplish, but is more difficult in a composite or fabric skinned aircraft. In such cases, a metallic ground plane should be fabricated and fitted under the antenna.

As the ground plane is made smaller, the actual dimensions of the ground plane become more critical, and small multiples of the wavelength should be avoided, as should circles. Rectangles or squares are much less likely to create a critical dimension that resonates with the transmissions. The thickness of the material used to construct the ground plane is not critical, providing it is sufficiently conductive. A variety of proprietary mesh and grid solutions are available. Heavyweight cooking foil meets the technical requirements, but obviously needs to be properly supported.

Antenna Cable

It is recommended that a high quality 50 Ω (50 Ohms) coaxial cable, such as RG400 or RG142B is used.

When routing the cable, ensure that you:

- Route the cable away from sources of heat.
- Avoid routing antenna cables together.
- Route the cable away from potential interference sources such as ignition wiring, 400Hz generators, fluorescent lighting and electric motors.
- Allow a minimum separation of 300 mm (12 inches) from an ADF antenna cable.
- Keep the cable run as short as possible.
- Avoid routing the cable around tight bends.
- Avoid kinking the cable even temporarily during installation.
- Secure the cable so that it cannot interfere with other systems.

Antenna TNC Connector

BNC connectors are more common for COM radio installations than TNC connectors. TNC Male to BNC Female adapters such as Amphenol P/N 242149 are readily available and inexpensive and will allow an antenna system terminated in a BNC Male connector to be used with the SV-COM-T25/T8.

This section describes the technique for attaching the antenna cable to a TNC connector. A TNC connector is not supplied with the SV-COM-X25/X83. The SV-COM-T25/T8 has a TNC Female connector. Therefore, you will need to source a TNC Male connector that is compatible with the antenna cable type that meets your aircraft's needs.

A dual crimp style TNC connector can be completed using a wide range of commercial crimp tools (for example the Tyco 5-1814800-3). The die apertures for the inner pin and the outer shield should be approximately 1.72 mm and 5.41 mm respectively.

- Strip back the coax cable to the dimensions in the table, as shown in the diagram below. Slide 25 mm (1 inch) of heat shrink tubing over the cable.
- Slide the outer crimp sleeve over the cable – it must go on before securing the center contact.

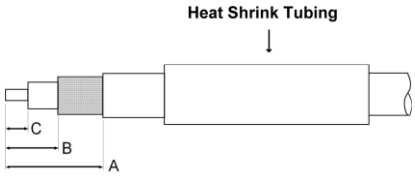

Dimension	Cut size (mm)	Cut size (inches)
A	17.5	0.69
B	7.2	0.28
C	4.8	0.19

- Crimp the center contact to the cable.
- Insert the cable into the connector – the center contact should click into place in the body, the inner shield should be inside the body of the connector and the outer shield should be outside the body.
- Crimp the outer sleeve over the shield.
- Slide heat shrink tubing forward (flush to connector) and heat to shrink the tubing.

TNC to BNC Adapter

If you have purchased a COM antenna that has coaxial cable and a BNC connector already installed, you can use a "TNC Male to BNC Female" adapter to adapt the SV-XPNDR-261/262's TNC connector to a BNC connector. We recommend that you purchase an adapter by a reputable manufacturer of radio frequency connectors and adapter such as Amphenol. The part pictured at right is an Amphenol P/N 242149, and is available from Digi-Key as P/N ACX1378-ND.

SkyView System Settings for SV-COM-X25 and SV-COM-X83

Network Setup

As with all other SkyView Network devices, the SV-COM-X25/X83 must be configured into the SkyView Network:

- Go to SETUP MENU > SYSTEM SETUP > SKYVIEW NETWORK SETUP > CONFIGURE > (right click) > DETECT (button).
- The SV-COM-X25/X83 will be listed as SV-COM-PANEL.
- FINISH (button) > EXIT (button)

COM RADIO Setup

To adjust Squelch and Sidetone, go to SETUP MENU > COM RADIO SETUP:

> SQUELCH LEVEL – Adjust squelch level so that the audio is heard during transmissions, and muted when transmissions are not present.

> SIDETONE VOLUME – Adjust for your personal preference of how much microphone audio is heard in the headset when transmitting.

Displayed COM (Top Bar)

The status of one COM radio can be displayed on the top bar. The radio that is selected here is also the radio that you can send airports and frequencies to via SkyView's Map Menu APT>COM and TUNE COM buttons. See the SkyView Pilot's User Guide for additional details.

- Go to SETUP MENU > SYSTEM SETUP > DISPLAYED COM and select which COM radio status to display on the Top Bar (or NONE). (To display status of a non-Dynon Avionics radio, a serial port connection must be installed FROM the radio TO the SkyView display(s).

SV-COM-X83 – 8.33 kHz / 25 kHz Tuning Steps

The default tuning step (channel size) for the SV-COM-X83 is 8.33 kHz, not the traditional 25 kHz for aviation communications. To change to 25 kHz tuning steps (channel size):

SETUP MENU > ENABLE 8.33 KHZ (SV-COM-X83) > NO.
This setting can be changed back to 8.33 kHz at any time.

Post Installation Checks

- On Ground
  - Do all SV-COM-PANEL buttons and knobs function normally?
  - Verify dim commands from SkyView display dim the backlighting of the SV-COM-PANEL.
  - Does the (optional) FLIP/FLOP pushbutton swap the STBY and COM frequencies?
  - Does pushing the PTT switch cause the SV-COM-X25/X83 to transmit (only) when pushed?

Do not transmit without an antenna connected. Doing so will damage your SV-COM-X25/X83.

  - (Optional, if two SV-COM-X25/X83s installed) Does the PTT Select Switch cause only the selected radio to transmit when PTT switch is pushed?
  - Temporarily install a VSWR meter between the SV-COM-X25/X83 and the antenna. Using brief test transmissions, is the VSWR 2.5:1 or below? *The maximum acceptable VSWR for SV-COM-X25/X83 is 2.5:1.*
  - When transmitting on SV-COM-X25/X83, is there any interference to other aircraft systems?
  - Power off the SkyView display(s) by pushing and holding Button #1 on the display. The SV-COM-X25/X83 should continue to operate normally, with the exception that auto-population of the button frequencies will not occur, and a NO SV error message will appear approx. 3 seconds after SV is not operating.
- In Flight
  - Does the SV-COM-X25/X83 receive other aircraft and ground transmissions at reasonable ranges?
  - Does the SV-COM-X25/X83 receive other aircraft and ground transmissions equally well at the low end, middle, and high end of the Aviation band?
  - Is received audio clear at most volume levels on the SV-COM-X25/X83? (Distortion at high volume levels is normal.)
  - Are transmissions from the SV-COM-X25/X83 heard by others at reasonable ranges? (Keep in mind that the power output of the SV-COM-X25/X83 is 6 watts.)
  - Are transmissions from the SV-COM-X25/X83 clear (when received by others)?

Continued Airworthiness and Maintenance

- Periodically inspect the COM antenna for wear and weather-tight seal to the fuselage. Water intrusion could corrode the antenna connection.
- As with all wiring, periodically inspect the COM antenna's coaxial cable for wear; repair or replace if significant wear is found.
- Periodic function checks as required by your aviation authority.

18. SV-AP-PANEL Installation and Configuration

If you intend to install and use SkyView SE, be advised that the buttons on the SV-AP-PANEL will not function.

The SV-AP-PANEL's Trim Control Subsystem, used for Electric Trim Control, and SkyView AP Auto-trim, can be used with SkyView SE.

This section contains pre-installation considerations, installation instructions, and details to install the SV-AP-PANEL/H (Horizontal orientation) and SV-AP-PANEL/V (Vertical orientation). Physically, electronically, and operationally, the two versions are identical, and hereafter referred to SV-AP-PANEL.

The SV-AP-PANEL is an optional control panel for a SkyView system that provides one-button controls for the SkyView Autopilot that are otherwise operated from the SkyView display menu buttons (which are still accessible after the installation of an SV-AP-PANEL). As the SV-AP-PANEL allows for expert autopilot mode controls including IAS, VNAV, and approach sequencing, the buttons on the SV-AP-PANEL are enabled only when the SkyView AP is set to EXPERT mode (SETUP MENU > AUTOPILOT SETUP > AUTOPILOT CONTROLS > EXPERT). Up to two SV-AP-PANELs can be installed in a SkyView system.

Setting the SkyView AP to EXPERT mode requires that two SkyView AP servos (Roll *and* Pitch) are installed. If only one servo (either Roll only, or Pitch only) is installed, the SkyView AP can only be set to SIMPLIFIED mode, and thus, the SV-AP-PANEL cannot be used.

SV-AP-PANEL NOSE UP and NOSE DN BUTTONS

The NOSE UP button on the SV-AP-PANEL commands the AP System, if engaged, to incrementally pitch the AP "Nose Up" via IAS or VS adjustments depending on what mode the AP is in.

Similarly, the NOSE DN button on the SV-AP-PANEL commands the AP system, if engaged, to incrementally pitch the AP "Nose Down" via IAS or VS adjustments depending on what mode the AP is in.

The SV-AP-PANEL NOSE UP and NOSE DN buttons command the AP; *these buttons do not command trim controls (via the D15 connector).* The only controls for trim are button inputs to the D15 connector – see details below).

Figure 198
SV-AP-PANEL
UP / DN Buttons

Figure 199 is an overview of suggested steps for SV-AP-PANEL installation.

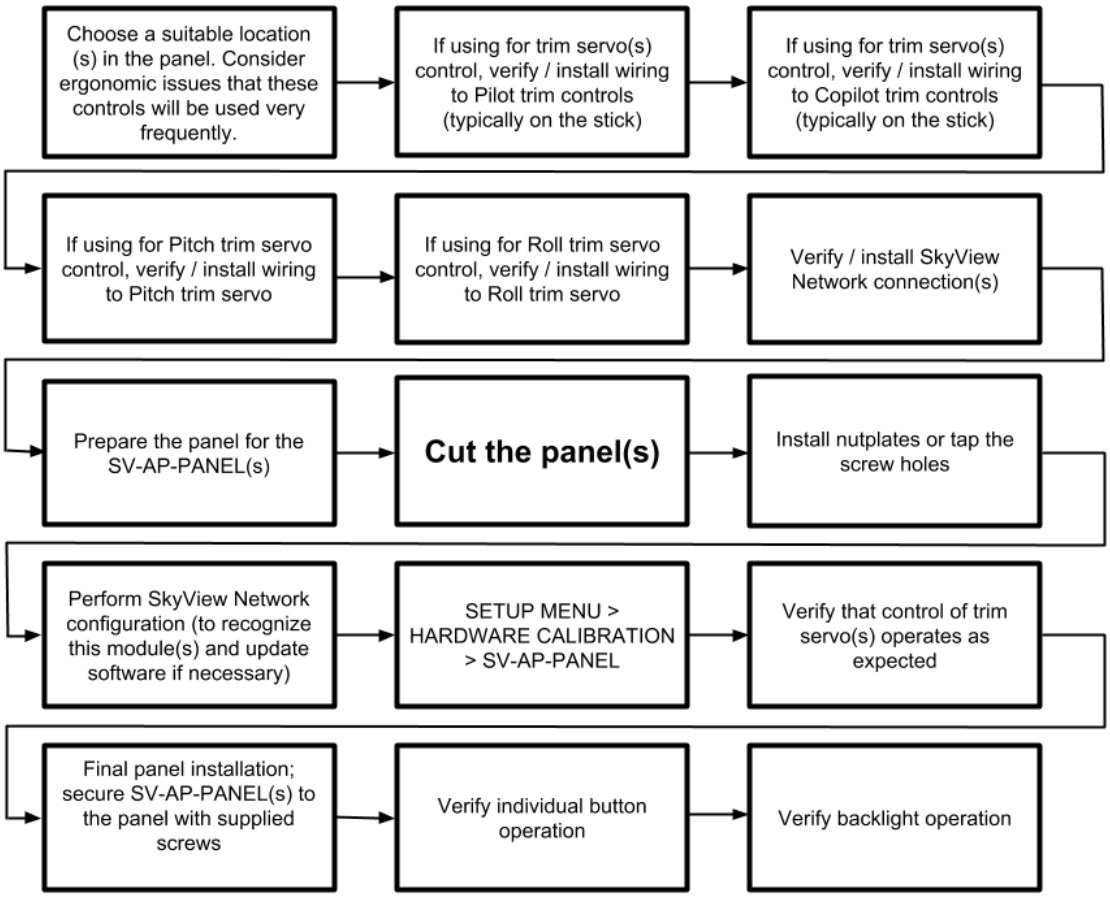

Figure 199 – Overview of SV-AP-PANEL Installation

Physical Installation

The following diagrams as printed are NOT to scale, NOT actual size. 1:1 template drawings and CAD models (same as SV-COM-PANEL) are available for download at http://docs.dynonavionics.com.

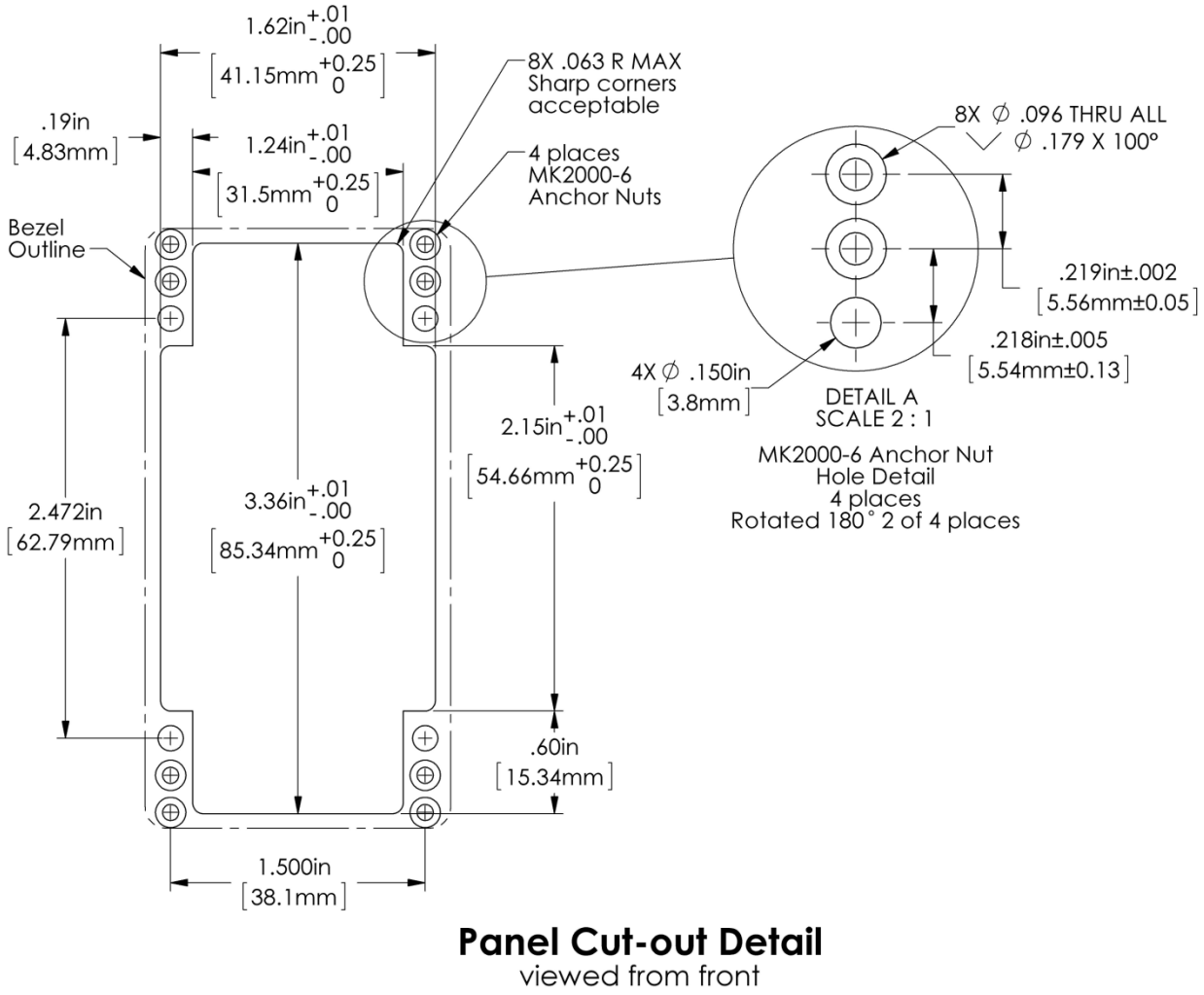

Figure 200 – SV-AP-PANEL Panel Cutout and Mounting Hole Dimensions - NOT ACTUAL SIZE

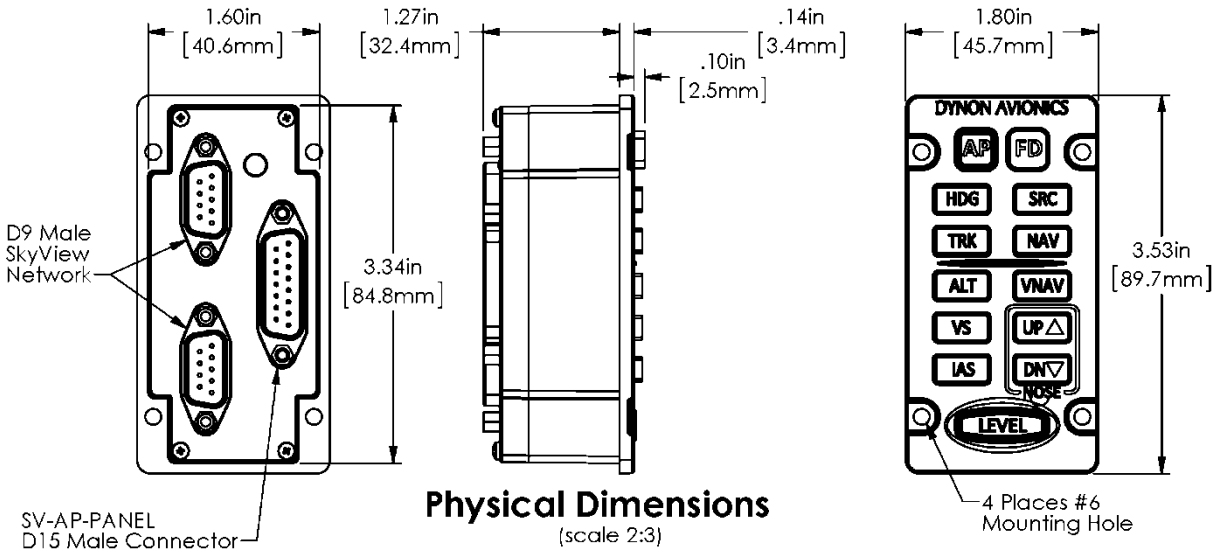

Figure 201 – SV-AP-PANEL Dimensions

Electrical Installation

SkyView Network

The SV-AP-PANEL has two SkyView Network connections (D9M connectors). Both connectors are electrically identical and are internally connected. Thus, the SV-AP-PANEL can be installed in the SkyView Network as a "pass-through" device, or "daisy chained" from one SkyView Network device, through the SV-AP-PANEL, to the next SkyView Network device. The SV-NET-1.5CC is an 18-inch SkyView Network cable that is ideal for such situations. The SV-AP-PANEL receives power (for operation of the buttons) from SkyView Network. Dimming of the SV-AP-PANEL is controlled by the SkyView display(s).

Trim Motor Control

In addition to the AP mode buttons, the SV-AP-PANEL includes an adjustable, speed-sensitive trim controller, eliminating the need for relay packs or a separate trim controller. The integrated trim controller is wired to a D15M connector that can be connected to Aircraft power (12V only), pushbuttons (typically, on the stick), and power to and control of up to two trim motors - such as those made by Ray Allen. A set of pushbuttons can optionally be installed for the copilot. The pilot's pushbuttons take priority over the copilot's pushbuttons. Pushbuttons used for Trim Motor Control must be Push Button Normally Open (PBNO) – a momentary switch with a contact that is closed only when the button is pushed. One terminal of the pushbutton is connected to the selected pin; the other terminal of the pushbutton is connected to avionics ground (can be common with Pin 2).

Note that the SV-AP-PANEL's trim controller only connects to the trim *motors*. The SV-AP-PANEL does not connect to or monitor trim *position*. Monitoring trim position is done by connecting the trim motor's potentiometer (position sensor) that is mechanically ganged to the trim motor to a General Purpose Input pin on the SkyView SV-EMS-220/221 as described in

Trim and Flaps Position Potentiometers in the SV-EMS-220/221 Installation and Configuration section.

Trim Motor Control Safety Features

- Pilot trim controls override Copilot trim controls.
- If SkyView Network connection or SkyView power is lost, the trim motor functions will continue to function as long as avionics power is available at Pin 9. When SkyView is not powered on (not communicating with the SV-AP-PANEL) the speed scheduling features (QUICKEST TRIM SPEED / SLOWEST TRIM SPEED) are not available. In this failsafe mode, the trim motors will run at their full speed when trim buttons are pushed.
- If a trim control button is detected as pushed when power is first applied to Pin 9, trim control will not activate until the button is first released.
- If a trim control button is pushed for more than five seconds (or longer, such as a stuck button), trim control on that axis will be temporarily inactivated until the button is first released.
- Motor outputs are protected against short circuits.

If two SV-AP-PANELs are installed, connect only one SV-AP-PANEL to control trim motors. Do *not* connect the second SV-AP-PANEL's D15M connector in parallel with the first SV-AP-PANEL's D15M connector – doing so could cause unexpected behaviour and/or damage to the units and the trim motors.

On the D15M connector, Power (Pin 9) and Ground (Pin 2) connections are only required to control a Pitch trim motor and/or a Roll trim motor. If the trim motor outputs are not used, Power (Pin 9) and Ground (Pin 2) should *not* be connected.

Ray Allen trim motors are known to work - connect the white wires to Pins 7 and 8 (MOTOR 1) and/or Pins 14 and 15 (MOTOR 2). If using other trim motors, ensure that the trim motor's maximum current does not exceed 2A.

The functions assigned to each pin in Table 99 below reflect Motor 1 being used for TRIM UP/DOWN and Motor 2 being used for TRIM RIGHT/LEFT.

D15M Pin	Pin Function	Notes
1	This pin is not used, do not connect.	This pin is not used, do not connect.
2	Aircraft Electrical Ground	If trim motor(s) control is *not* used, do *not* connect. Power and ground for the SV-AP-PANEL front panel buttons is provided by SkyView Network.
3	PILOT TRIM UP	Motor 1: Pin 7 polarity is +, Pin 8 polarity is -
4	PILOT TRIM DOWN	Motor 1: Pin 7 polarity is -, Pin 8 polarity is +
5	COPILOT TRIM UP	Motor 1: Pin 7 polarity is +, Pin 8 polarity is -
6	COPILOT TRIM DOWN	Motor 1: Pin 7 polarity is -, Pin 8 polarity is +

D15M Pin	Pin Function	Notes
7	MOTOR 1 WIRE #1	Pin 3 or Pin 5 grounded: Pin 7 polarity is +, Pin 8 polarity is - (Motor rotates in one direction) Pin 4 or Pin 6 grounded: Pin 7 polarity is -, Pin 8 polarity is + (Motor rotates in the other direction)
8	MOTOR 1 WIRE #2	
9	12 Volts @ 4A	If trim motor(s) control is *not* used, do *not* connect. Power and ground for SV-AP-PANEL front panel buttons is provided by SkyView Network.
10	PILOT TRIM RIGHT	Motor 2: Pin 14 polarity is +, Pin 15 polarity is -
11	PILOT TRIM LEFT	Motor 2: Pin 14 polarity is -, Pin 15 polarity is +
12	COPILOT TRIM RIGHT	Motor 2: Pin 14 polarity is +, Pin 15 polarity is -
13	COPILOT TRIM LEFT	Motor 2: Pin 14 polarity is -, Pin 15 polarity is +
14	MOTOR 2 WIRE #1	Pin 10 or Pin 12 grounded Pin 14 polarity is +, Pin 15 polarity is - (Motor rotates in one direction) Pin 11 or Pin 13 grounded Pin 14 polarity is -, Pin 15 polarity is + (Motor rotates in the other direction)
15	MOTOR 2 WIRE #2	

Table 99 – SV-AP-PANEL Trim Motor Control Pinout

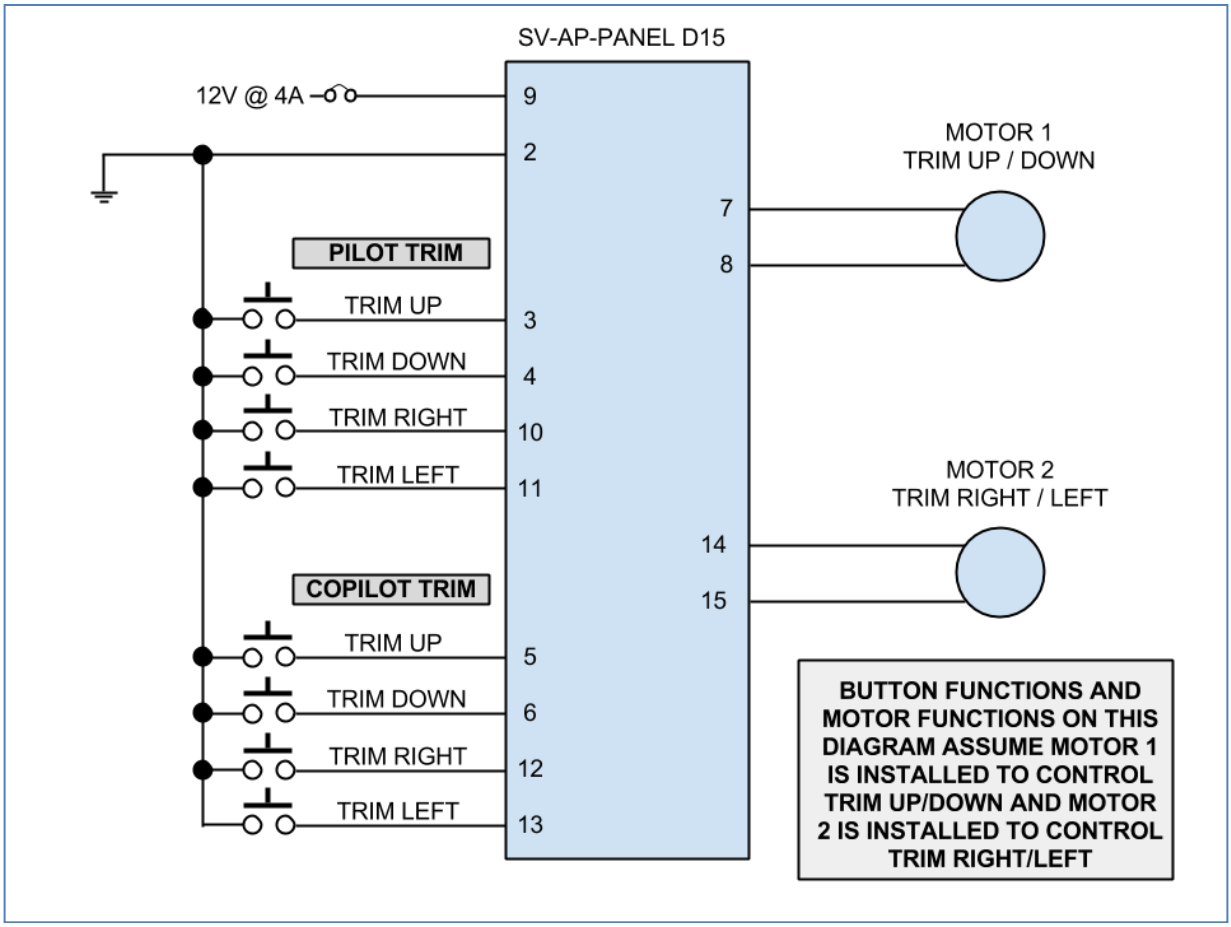

Figure 202 – SV-AP-PANEL Trim control wiring diagram

Network Setup

As with all other SkyView Network devices, the SV-AP-PANEL must be configured into the SkyView Network:

- Go to SETUP MENU > SYSTEM SETUP > SKYVIEW NETWORK SETUP > CONFIGURE > (right click) > DETECT (button).
- The SV-AP-PANEL(s) will be listed.
- FINISH (button) > EXIT (button)

SkyView Configuration for SV-AP-PANEL (Trim Motor Control)

The SV-AP-PANEL's trim controller can adjust the speed at which the trim motors run. In many aircraft, this allows you have finer trim control for a given pushbutton press or hold by having the trim motor movement slowed down at higher airspeeds.

SETUP MENU > HARDWARE CALIBRATION > TRIM CALIBRATION:

(If you connected trim control pushbuttons and the motors per Table 99 above, MOTOR 1 will control PITCH trim.)

> MOTOR 1:

> AUTO-TRIM FUNCTION: NONE (right click to enter the menu)

Follow the on-screen instructions to define which trim surface the Autopilot auto-trim feature will move. This process also determines the correct auto-trim motor directions. Pushing the RESET button will restart the calibration process.

After the calibration is complete, the AUTO-TRIM FUNCTION: (label) will reflect the trim surface that will be automatically trimmed by the autopilot when that autopilot axis is engaged.

> QUICKEST TRIM SPEED

> TRIM MOTOR SPEED: xxx%

Set as appropriate for your aircraft's performance.

> AT AND BELOW AIRSPEED: xxx KNOTS

Set as appropriate for your aircraft's performance.

> SLOWEST TRIM SPEED

> TRIM MOTOR SPEED: xxx%

Set as appropriate for your aircraft's performance.

> AT AND ABOVE AIRSPEED: xxx KNOTS

Set as appropriate for your aircraft's performance.

> TRIM MOTOR PULSE RATE: <numerical value>

Set as appropriate for your aircraft's performance. Dynon suggests leaving default value and fine-tuning during flight. See Autopilot Auto-Trim section below.

(If you connected trim control pushbuttons and the motors per Table 99 above, MOTOR 2 will control ROLL trim.)

> MOTOR 2 CONFIG:

> AUTO-TRIM FUNCTION: NONE (right click to enter the menu)

Follow the on-screen instructions to define which trim surface the Autopilot auto-trim feature will move. This process also determines the correct auto-trim motor directions. Pushing the RESET button will restart the calibration process.

After the calibration is complete, the AUTO-TRIM FUNCTION: (label) will reflect the trim surface that will be automatically trimmed by the autopilot when that autopilot axis is engaged.

> QUICKEST TRIM SPEED

> TRIM MOTOR SPEED: xxx%

Set as appropriate for your aircraft's performance.

> AT AND BELOW AIRSPEED: xxx KNOTS

Set as appropriate for your aircraft's performance.

> SLOWEST TRIM SPEED

> TRIM MOTOR SPEED: xxx%

Set as appropriate for your aircraft's performance.

> AT AND ABOVE AIRSPEED: xxx KNOTS
Set as appropriate for your aircraft's performance.

> TRIM MOTOR PULSE RATE: <numerical value>
Set as appropriate for your aircraft's performance. Dynon suggests leaving default value and fine-tuning during flight. See Autopilot Auto-Trim section below.

Autopilot Auto-trim

SkyView can provide automatic trim control (AP Auto-trim) if your plane's electric trim motor(s) are operated through the SV-AP-PANEL's trim controller (trim control pushbuttons on the stick, and the electric trim motors, are connected to the SV-AP-PANEL). The SV-AP-PANEL can provide AP Auto-trim whether the SkyView AP is configured to EXPERT AP mode, or SIMPLIFIED AP mode.

Auto-trim control of PITCH TRIM is only active when the SkyView AP's PITCH axis is engaged.

Auto-trim control of ROLL TRIM is only active when the SkyView AP's ROLL axis is engaged.

After MOTOR 1 and/or MOTOR 2 calibration is completed through the AUTO-TRIM FUNCTION menus described above, Autopilot Auto-trim is enabled on those axes.

If you want to disable Autopilot Auto-trim, push buttons 7+8 to enter the SETUP MENU, then

- AUTOPILOT SETUP > ROLL AXIS > AUTO-TRIM ENABLED – set to NO
- AUTOPILOT SETUP > PITCH AXIS > AUTO-TRIM ENABLED – set to NO

In-Flight Auto-Trim Tuning

If trim control oscillates back and forth in level flight, reduce TRIM MOTOR PULSE RATE (see instructions below).

1. Configure airplane for cruise flight.
2. When safe to do so, engage Autopilot in HDG and ALT mode.
3. Allow airplane to fly undisturbed for at least 60 seconds, observing pitch and roll (if equipped) trim control. If trim control oscillates back and forth in level flight:
   a. Press and hold Button #7 and #8 simultaneously to enter IN-FLIGHT SETUP MENU.
   b. Navigate to TRIM MOTOR CONFIGURATION > MOTOR 1 (Pitch) or MOTOR 2 (Roll).
   c. Reduce TRIM MOTOR PULSE RATE until oscillation stops, and then monitor trim control performance for 60 seconds after changing setting.
   d. Press EXIT.
4. With Autopilot engaged, steadily reduce airplane speed to 10 knots above minimum Autopilot speed, confirming Autopilot applies appropriate trim input during speed change.

5. If needed, repeat Step 3.

If pilot-activated electric trim functions normally, but Auto-Trim is not moving trim controls at all or enough, increase TRIM MOTOR PULSE RATE by (see instructions below).

1. Configure airplane for cruise flight.
2. When safe to do so, engage Autopilot in HDG and ALT mode.
3. Allow airplane to fly undisturbed for at least 60 seconds, and then activate electric trim functions manually, observing pitch and roll (if equipped) trim control. If pilot-activated electric trim functions normally, but Auto Trim is not moving trim controls at all or enough:
   a. Press and hold Button #7 and #8 simultaneously to enter IN-FLIGHT SETUP MENU.
   b. Navigate to TRIM MOTOR CONFIGURATION > MOTOR 1 (Pitch) or MOTOR 2 (Roll).
   c. Increase TRIM MOTOR PULSE RATE until Auto Trim moves trim controls without oscillations, and then monitor trim control performance for 60 seconds after changing setting.
   d. Press EXIT.
4. With Autopilot engaged, steadily reduce airplane speed to 10 knots above minimum Autopilot speed, confirming Autopilot applies appropriate trim input during speed change.
5. If needed, repeat Step 3.

Post Installation Checks

- Verify buttons operate all AP modes.
- Verify dim commands from SkyView display dim the backlighting of the SV-AP-PANEL.
- Verify that trim controls operate as commanded from Pilot and (optional) Copilot controls.
- During a test flight, use the PITCH trim pushbuttons to bring the plane slightly out of PITCH trim. Verify that PITCH auto-trim automatically trims the PITCH as needed. (Assumes that PITCH auto-trim is enabled.)
- During a test flight, use the ROLL trim pushbuttons to bring the plane slightly out of ROLL trim. Verify that ROLL auto-trim automatically trims the ROLL as needed. (Assumes that ROLL auto-trim is enabled.)

19. SV-KNOB-PANEL Installation

This section contains pre-installation considerations and installation instructions and details to install the SV-KNOB-PANEL/H (Horizontal orientation) and SV-KNOB-PANEL/V (Vertical orientation). Physically, electronically, and operationally, the two versions are identical, and hereafter referred to SV-KNOB-PANEL.

SV-KNOB-PANEL is an optional control panel for a SkyView system that provides dedicated function knobs for:

- ALT
- BARO
- HDG/TRK

that are otherwise operated from the multifunction knobs on a SkyView display(s). Each SV-KNOB-PANEL knob can be pressed to sync each bug/setting, the same as using the knobs on the SkyView display. When an SV-KNOB-PANEL is installed in a SkyView system, the knobs on a SkyView display can still be set to ALT, BARO, and HDG/TRK if desired. Up to two SV-KNOB-PANELs can be installed in a SkyView system.

Figure 203 is an overview of suggested steps for SV-KNOB PANEL installation.

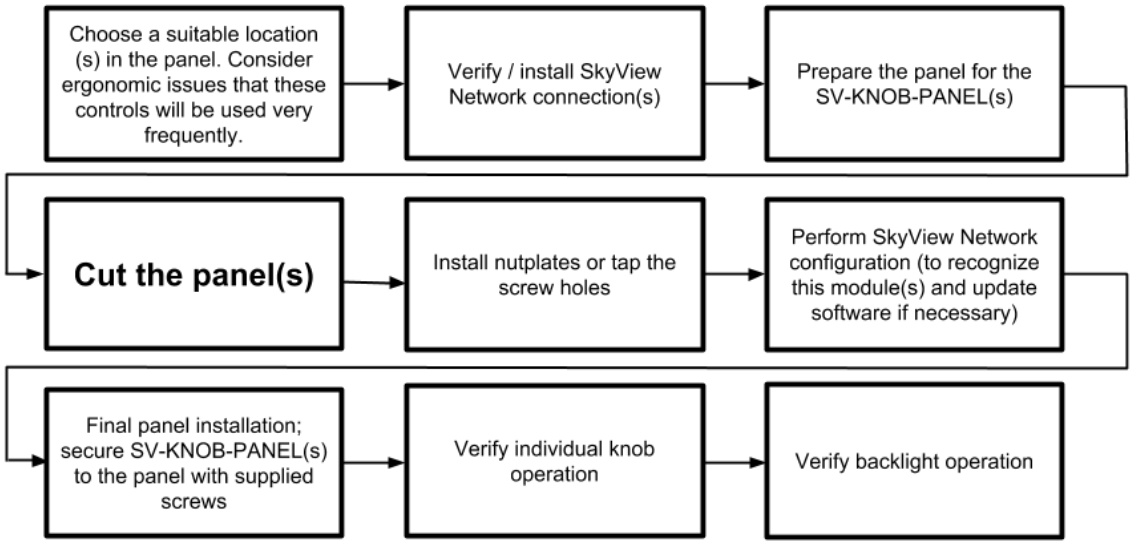

Figure 203 – Overview of SV-KNOB-PANEL Installation

Physical Installation

The following diagrams as printed are NOT to scale, NOT actual size. 1:1 template drawings and CAD models are available for download at – http://docs.dynonavionics.com (use SV-COM-PANEL drawings, which have the same dimensions as SV-AP-PANEL).

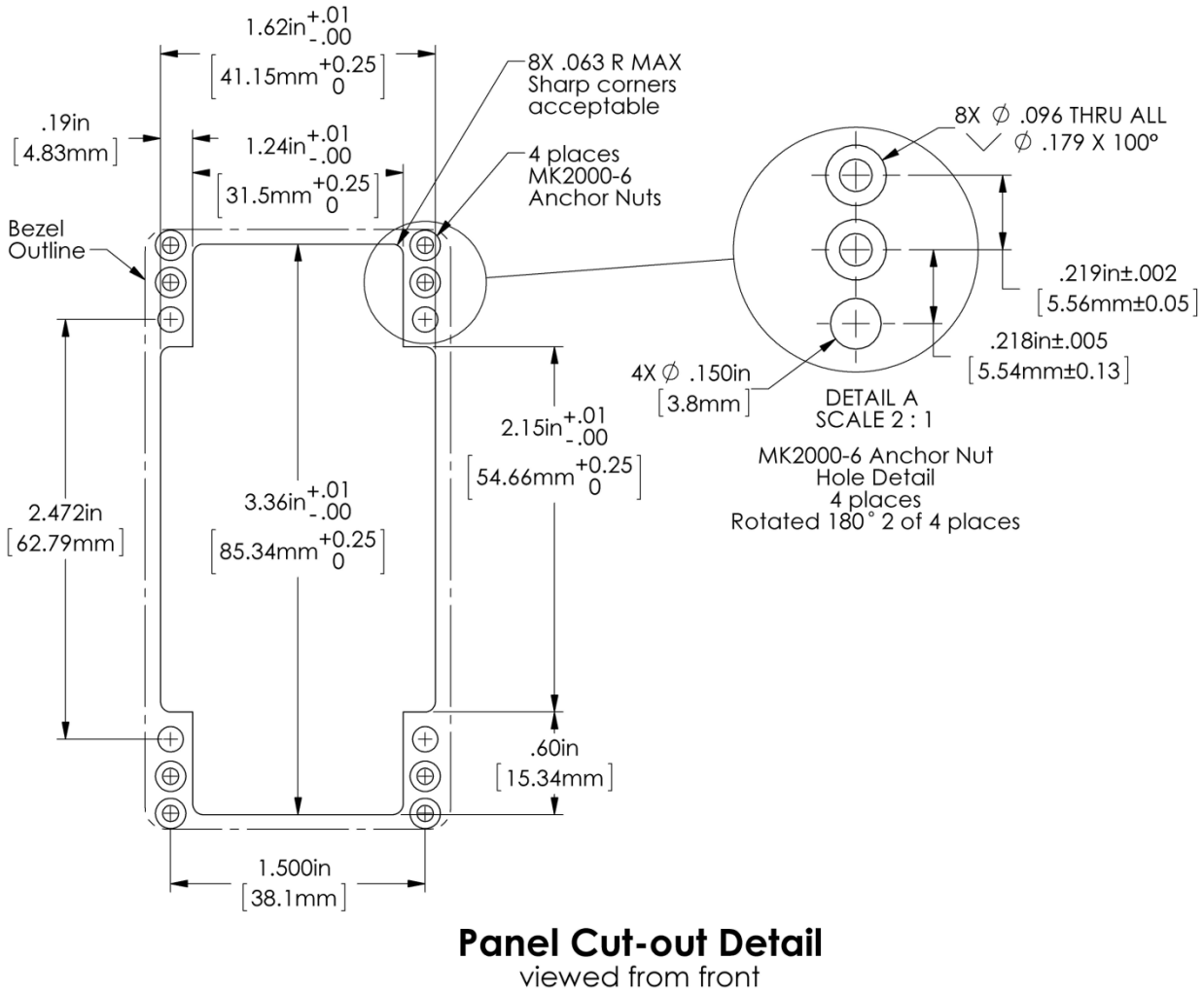

Figure 204 – SV-KNOB-PANEL Panel Cutout and Mounting Hole Dimensions - NOT ACTUAL SIZE

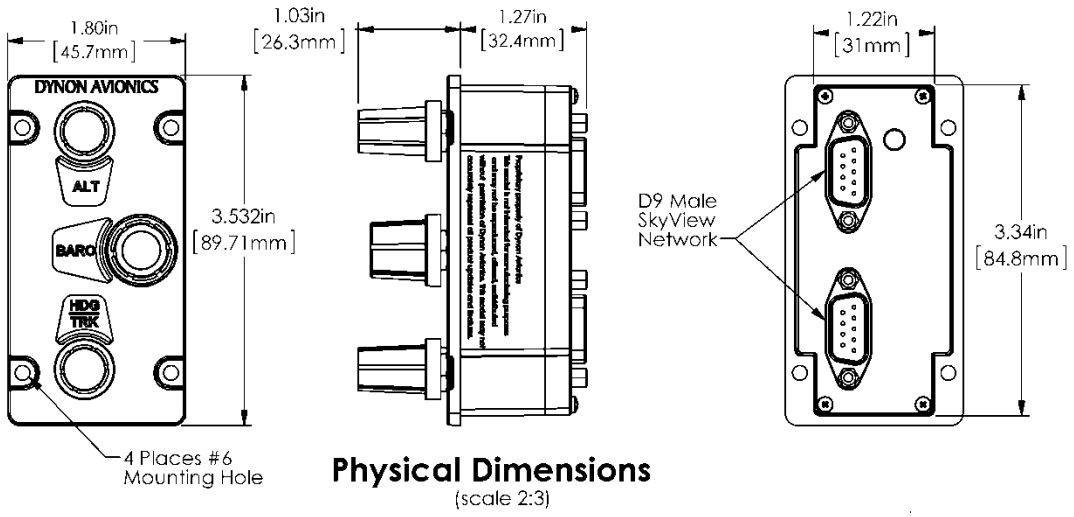

Figure 205 – SV-KNOB-PANEL Dimensions

Electrical Installation

SkyView Network

The SV-KNOB-PANEL has two SkyView Network connections (D9 connectors). Both connectors are electrically identical and are internally connected. Thus, the SV-KNOB-PANEL can be installed in the SkyView Network as a "pass-through" device, or "daisy chained" from one SkyView Network device, through the SV-KNOB-PANEL, to the next SkyView Network device. The SV-NET-1.5CC is an 18-inch SkyView Network cable that is ideal for such situations. The SV-AP-PANEL receives power (for operation of the buttons) from SkyView Network. Backlighting of the SV-KNOB-PANEL is controlled by the SkyView display(s).

Network Setup

As with all other SkyView Network devices, the SV-KNOB-PANEL must be configured into the SkyView Network:

- Go to SETUP MENU > SYSTEM SETUP > SKYVIEW NETWORK SETUP > CONFIGURE > (right click) > DETECT (button).
- The SV-KNOB-PANEL(s) will be listed.
- FINISH (button) > EXIT (button)

Post Installation Checks

- Verify the knobs work as expected.
- Verify dim commands from SkyView display dim the backlighting of the SV-KNOB-PANEL.

20. SV-MAG-236 Installation and Configuration

Figure 206 – SV-MAG-236 (Photo)

The SV-MAG-236 Remote Magnetometer was developed for situations where the SV-ADAHRS-200/201's integrated magnetometer cannot be located in an area free of magnetic disturbances while satisfying the other installation constraints (such as proximity to center of gravity) of the SV-ADAHRS-200/201. The SV-MAG-236 is particularly recommended for steel-frame aircraft.

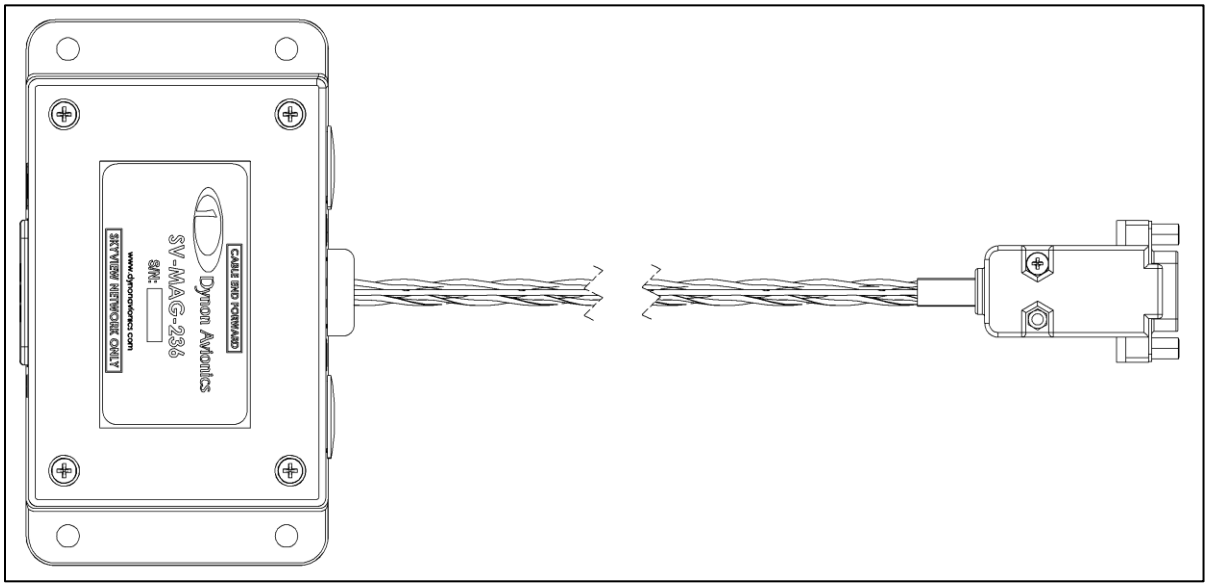

Figure 207 – SV-MAG-236 (Drawing)

To minimize the possibility of magnetic interference from the connector assembly, the SV-MAG-236 uses an 18-inch integral cable – the connector is remoted from the magnetometer sensor.

A maximum of one SV-MAG-236 can be used in a SkyView system.

Figure 208 is a high-level overview of a suggested installation and configuration procedure for the SV-MAG-236:

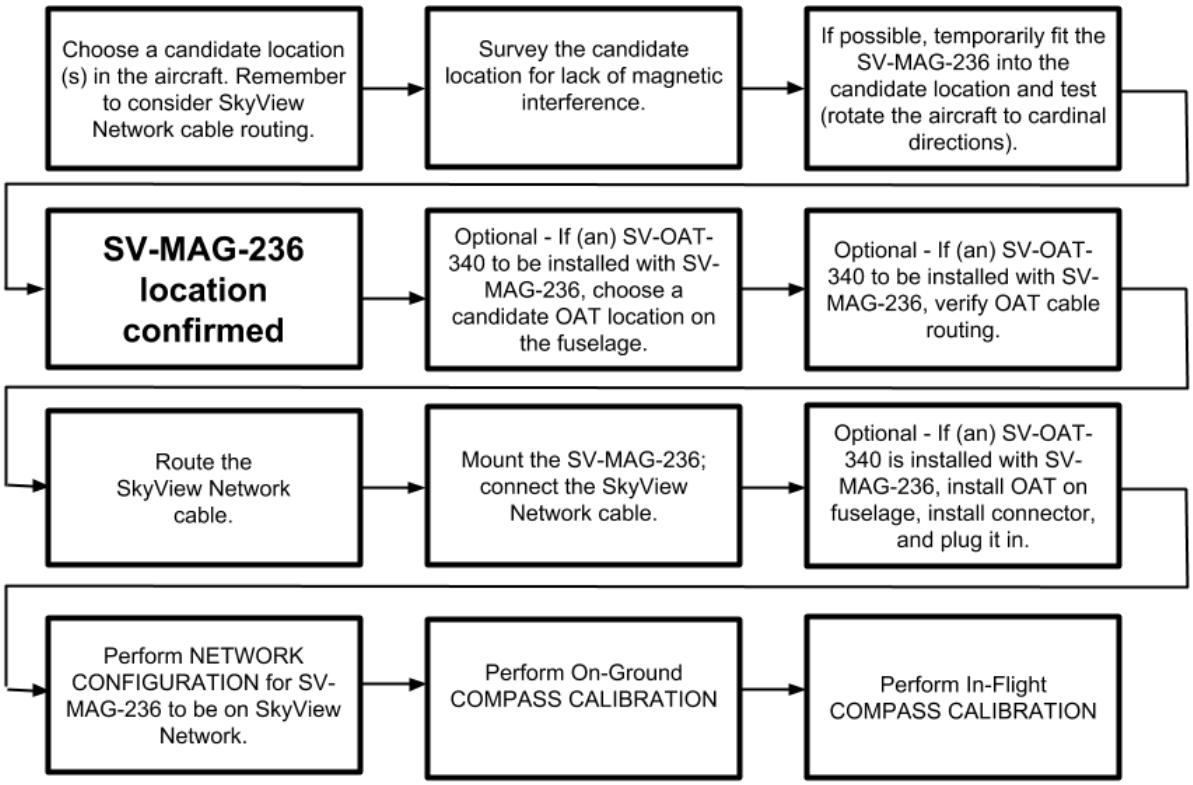

Figure 208 – Suggested Installation Sequence for the SV-MAG-236

Physical Installation

The most critical factor in the SV-MAG-236 being able to accurately sense magnetic heading is for it to be installed in an area of the plane that is *magnetically benign*.

Given that it may be difficult or impossible to avoid all sources of magnetic interference, it is possible to characterize and compensate for small, static magnetic fields with calibration. Calibration cannot, however, compensate for *dynamic* magnetic fields (e.g., AC currents, non-constant DC currents, and non-stationary ferrous material such as electric turn coordinators and control surfaces). Thus, you must avoid mounting the module close to sources of *dynamic* magnetic fields, avoid wires that carry large amounts of current, and use non-magnetic fasteners for installation (see caution below). Dynon Avionics' general rule of thumb is that 1 to 2 feet between the module and sources of magnetic fields is generally good enough, but 2 or more feet is better.

Stainless steel mounting hardware is not always non-magnetic, and thus *is not recommended*. The best type of mounting hardware (screws, bolts, washers, AND nuts) to install the SV-ADAHRS-200/201 is brass.

If you use a magnet to test whether possible interfering materials are non-magnetic, do not actually touch the magnet to the material you are testing, as this contact can cause the material you are testing to become magnetized.

Move a handheld compass throughout the space surrounding your intended location to get a rough idea of the suitability of the area. Note that this test should be done with major aircraft systems operating (e.g., strobe lights and radios on) because some systems can cause magnetic interference. If the compass needle deviates significantly from magnetic North or cycles back and forth, the location is not ideal for ADAHRS installation.

The diagram below shows the important mounting dimensions of the SV-MAG-236.

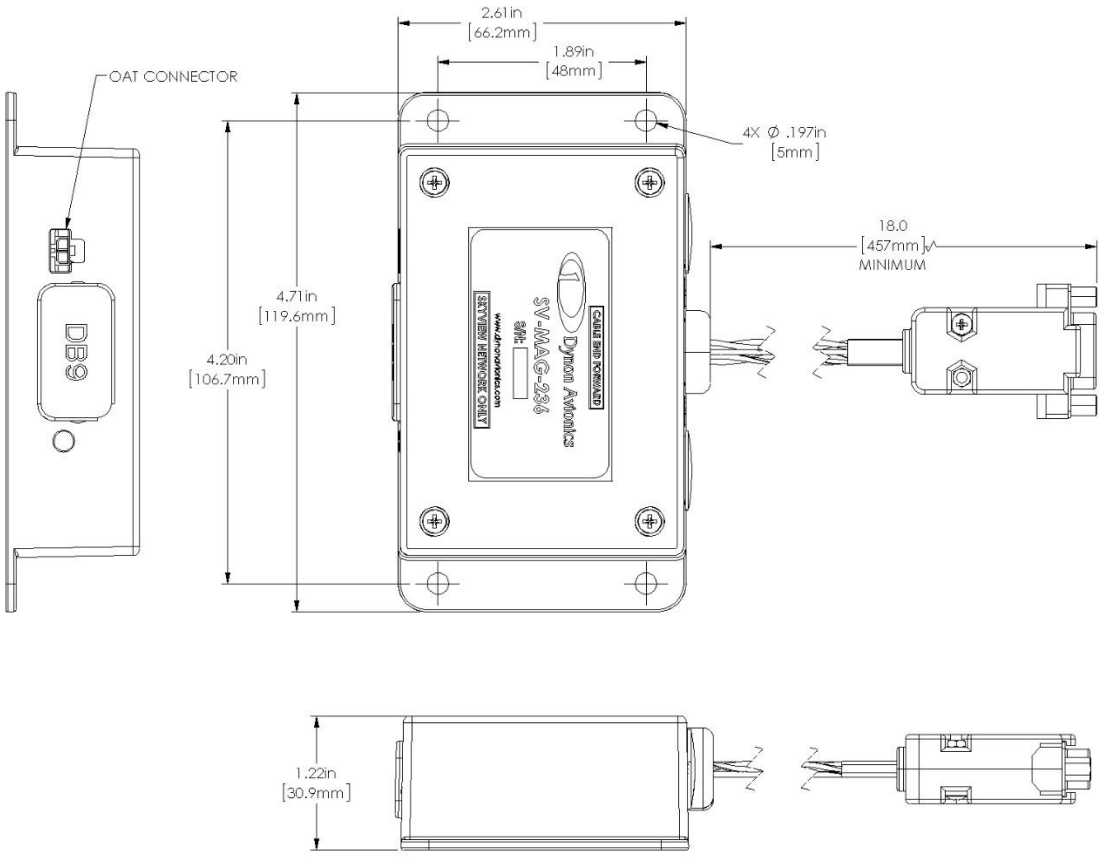

Figure 209 – SV-MAG-236 Mounting Dimensions

As with the SV-ADAHRS-200/201, an SV-MAG-236 should be mounted within one degree of parallel to all three aircraft axes. The SV-MAG-236 should be oriented such that:

- The SV-MAG-236's mounting tabs must be oriented towards the bottom of the aircraft.

- The label on the SV-MAG-236's must be oriented towards the top of the aircraft.
- The side of the SV-MAG-236 where the cable exists must be oriented towards the nose of the aircraft (as noted on the label of the unit – **CABLE END FORWARD**).
- The side of the SV-MAG-236 with the LED indicator must be oriented towards the rear of the aircraft.

The SV-MAG-236 will not be able to indicate correct heading if it is rotated or inverted in any other orientation.

The SV-MAG-236 must be installed in the same orientation as the SV-ADAHRS-200/201. The SV-ADAHRS-200/201 is required to be level, and the SV-MAG-236 is also. If the SV-ADAHRS-200/201 is installed with a pitch other than 0°, the SV-MAG-236 must be installed with the same pitch. As with the SV-ADAHRS-200/201, it may be necessary to use an *electronic* level as a "spirit" or "bubble" level may not be able to display an accurate enough degree of level.

Dynon Avionics does not provide mounting hardware with SV-MAG-236. The mounting tabs on each side of the module have holes sized for #10 fasteners, but it is up to the installer to decide how the SV-MAG-236 will be secured to the aircraft.

For best performance, it is recommended that button-head style non-ferrous (brass recommended) fasteners be used to install the SV-MAG-236in this location. Follow recommended torque practices when tightening the mounting hardware. *Do not rivet the SV-MAG-236 to the aircraft as this will hinder future removal if necessary.*

Do not use a magnetic driver when installing the SV-MAG-236. Doing so has the potential to affect the factory magnetic calibration.

Optional SV-OAT-340 Connected to SV-MAG-236

Each SV-ADAHRS-200 and SV-ADAHRS-201 includes an SV-OAT-340. The SV-MAG-236 does not include an SV-OAT-340, but one can be purchased separately – contact Dynon Avionics Sales.

Only one SV-OAT-340 is required in a SkyView system. The SV-OAT-340 can be connected to an SV-ADAHRS-200, or an SV-ADAHRS-201, or an SV-MAG-236. In a SkyView System which has an SV-ADAHRS-200, an SV-ADAHRS-201, and an SV-MAG-236, it is possible to have a total of three SV-OAT-340s, but only one SV-OAT-340 is used by the system at one time. If more than one SV-OAT-340 is installed, the system "chooses" which of the three to use for OAT.

For example, if the SV-ADAHRS-200 is installed in an area of the plane where it is inconvenient to route the SV-OAT-340 wiring, and the SV-MAG-236 is more accessible to the SV-OAT-340, just connect the SV-OAT-340 to the SV-MAG-236 (instead of to the SV-ADAHRS-200).

Because the SV-OAT-340 is optional for the SV-MAG-236, installation instructions are not included in this section – see *SV-OAT-340 Location and Installation* in the **Beginning in Software v15.0, SkyView** Classic, and SkyView HDX can provide up to ten maintenance reminders based on Date, elapsed Tach Time, or elapsed Hobbs Time. A maintenance reminder can also be displayed with no time basis (display text only).

After setup is complete, the Maintenance Log is accessed from the TOOLS > MAINTENANCE (SkyView Classic) or MENU > MAINT LOG icon (SkyView HDX). For instructions on how to use the Maintenance Log feature, see the SkyView Classic Pilot's User Guide, Rev. X and later, or the SkyView HDX Pilot's User Guide.

Each item in the maintenance log requires entry of the time basis (or NONE) to determine whether the item is not yet due, due, or overdue.

- SETUP MENU > AIRCRAFT INFORMATION > MAINTENANCE LOG
    - > LOG ITEM x
        - > NAME (user-defined text, up to 14 characters)
        - > TIME BASIS (NONE | DATE | TACH | HOBBS)
        - > END TIME, HRS (if TACH or HOBBS was selected)
          or…
          > END DAY, END MONTH, END YEAR (if DATE was selected)

SV-ADAHRS-200/201 Installation and Configuration **section** earlier in this manual.

SkyView Network Connection

Connect the SV-MAG-236 to the SkyView network using a SkyView Network Cable. To minimize any potential magnetic interference from the connector, it is recommended to *not* locate the connector near the SV-MAG-236. SkyView Network cables made by Dynon Avionics are available in various lengths, including 6 feet, 10 feet, 15 feet, 20 feet, 25 feet, and 30 feet.

If you have to install a connector on the end of a network cable, insert all pins into the D9 connector. Refer to Appendix C: Wiring and Electrical Connections for details on connector pinouts and wire colors.

Remember to configure the network as described in the Network Setup and Status section after connecting all modules to a display.

When a NETWORK CONFIGURATION is performed, the internal magnetometer of the SV-ADAHRS-200 (and SV-ADADHRS-201, if installed) is disabled.

When an SV-MAG-236 is installed in a SkyView system, if the SV-MAG-236 fails or is disconnected, GPS Ground Track (GND TRK) is substituted for magnetic heading throughout the system.

Compass Calibration

Dynon Avionics calibrates every SV-MAG-236 during manufacture. After the aircraft build is complete, an in-aircraft compass calibration must be performed. Until the on-ground or the in-flight compass calibration is performed, SkyView will display a Caution message: NEED COMPASS CAL.

SkyView Software v12.0 added an optional in-flight compass calibration procedure. Performing the in-flight compass calibration after the on-ground compass calibration can increase the accuracy of the compass' magnetic heading. The best compass performance will be achieved by performing the on-ground compass calibration, then performing the in-flight compass calibration. It is not required that the in-flight compass calibration be performed immediately after the on-ground compass calibration.

The on-ground compass calibration requires pointing the aircraft in four directions and acquiring data at each direction. An accurate method of aligning the aircraft with magnetic North, East, South, and West, such as an airport's compass rose, is required. *During the compass calibration, the aircraft's configuration and major systems should be in a state that resembles flight conditions (i.e., the canopy should be closed, the aircraft's pitch attitude matches SkyView's attitude depiction, the engine should be running, and all electronic devices used in flight should be on).*

Tail wheel equipped aircraft can be calibrated in their normal nose up ground attitude as long as the SkyView attitude display shows the correct corresponding nose up attitude.

A working GPS receiver with a view of the sky to acquire GPS data must be connected to the SkyView system in order to perform a compass calibration. SkyView uses GPS-derived position information to calculate magnetic intensity, declination, and variation.

During the on-ground compass calibration it is important to perform the compass calibration in an area that has been verified to be magnetically neutral. The presence of steel reinforcement (rebar), electrical power lines under the tarmac, or other natural deposits of ferrous metals can result in an inaccurate compass calibration. Airport compass roses are usually verified to be magnetically neutral and thus are often a good location for performing a compass calibration.
For more information on this issue see FAA Notice Number: NOTC4031:
https://www.faasafety.gov/files/notices/2012/Aug/CAUTION_TLP_031612_Rev10.pdf

On-ground Compass Calibration Procedure:

1. If you have two SkyView displays, the in-flight compass calibration can be performed from either display.
2. Turn on the SkyView system and allow it to warm up for a minimum of 5 minutes.
3. Move the aircraft into position so that it is convenient to orient it in the four cardinal directions.
4. Enter the Setup Menu on the SkyView display and go to the Compass Calibration Wizard (SETUP MENU > HARDWARE CALIBRATION > ADAHRS CALIBRATION > COMPASS CALIBRATION). Note - GPS data on the Compass Calibration Page must be green. If it is red, GPS data is not valid. You will see a screen similar to this:

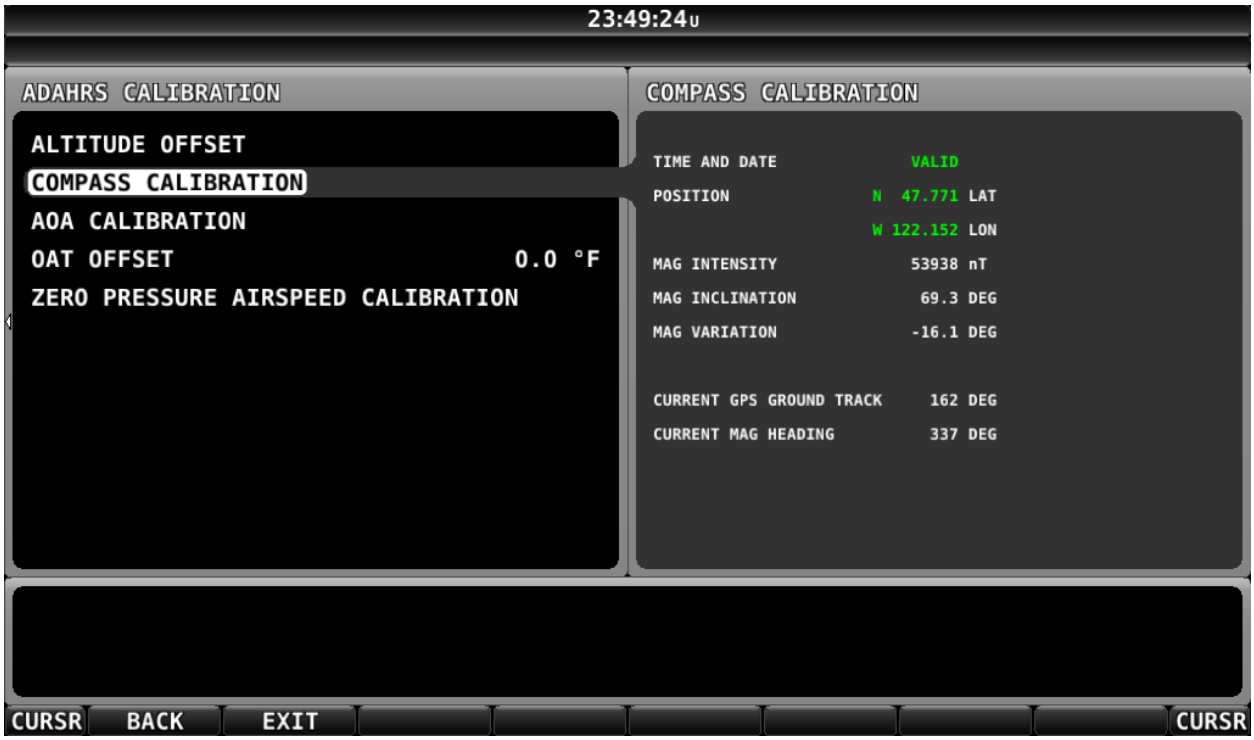

Figure 210 – On-ground COMPASS CALIBRATION Menu

5. Orient the aircraft to North, South, East, or West.
6. When the aircraft is stable at the chosen orientation, push the button indicating the direction the aircraft is oriented in. Example – when the aircraft is pointed North, push the NORTH button.
7. Wait for data collection to reach 100%.
8. Rotate to the next cardinal direction and repeat steps 4, 5, and 6 for any remaining headings.
9. If the Compass Calibration fails, a message will appear:
   CALIBRATION FAILED – S/N xxxx
10. CALIBRATION COMPLETE appears when calibration is complete. Press FINISH to return to menu navigation mode.

In-flight Compass Calibration Procedure:

The in-flight compass calibration should be conducted on a clear, VFR day. Before commencing the compass calibration, ensure that you have adequate altitude, clear weather, no traffic, no obstructions in the flight path, great visibility, no airspace conflicts, etc. It is recommended that clearing turns be performed before executing each procedure.

It is recommended that you bring someone along for the in-flight compass calibration procedure. At times the pilot's attention will be divided between documentation, configuring SkyView, and maintaining situational awareness.

Confine the flying for the in-flight compass calibration to a specific area to minimize variations in the earth's magnetic field during the calibration process (IE, don't combine the in-flight compass calibration with a cross-country flight).

While the in-flight compass calibration is optional, it will likely improve the dynamic performance of the heading indications in many aircraft. It is especially recommended for aircraft with the SV-MAG-236 are installed due to magnetic interference issues when installing the SV-ADAHRS-200/201. This is particularly true in steel framed aircraft.

The best compass performance will be achieved by performing the in-flight compass calibration *after the on-ground compass calibration has been performed*.

1. If you have two SkyView displays, the in-flight compass calibration can be performed from either display.
2. After observing the cautions above, push buttons 7+8 to enter the IN FLIGHT SETUP MENU. Note – this menu is not accessible while on the ground.
3. Select COMPASS CALIBRATION
4. Right-click the knob to enter the in-flight COMPASS CALIBRATION menu. You will see a screen similar to this:

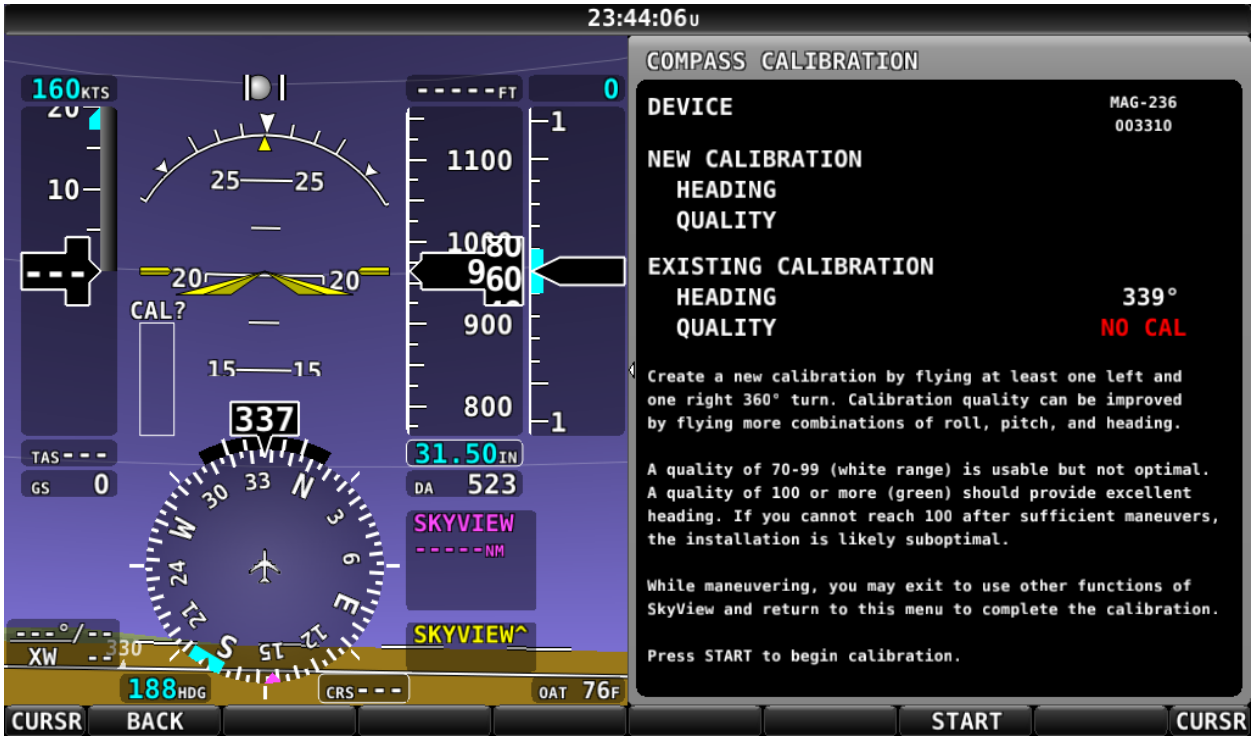

Figure 211 – In-flight COMPASS CALIBRATION Menu

5. Push the START button to begin the calibration.
6. Observe the NEW CALIBRATION section of the menu. The goal of the in-flight compass calibration is to achieve a compass calibration "quality" of at least 100.

7. The minimum maneuvers for in-flight compass calibration is one 360° turn clockwise, and one 360° turn counterclockwise. Flying additional maneuvers incorporating pitch and roll changes will likely improve the in-flight compass calibration.
8. When the quality is as high as you can obtain (above 70, the minimum), push the FINISH button to complete the in-flight compass calibration. Flying additional maneuvers beyond the minimum may improve the in-flight compass calibration, but will not make it worse.

QUALITY of 70-99 is acceptable, but not optimum; the accuracy of your magnetic heading may not be acceptable. Additionally, a sub-optimal QUALITY may have the following effects:

- Degraded performance of the SkyView Autopilot (AP) in HDG and NAV modes
- Degraded accuracy of wind direction and velocity

If, after multiple attempts at in-flight compass calibration, you cannot achieve QUALITY of at least 70, the SV-MAG-236 cannot sense the earth's magnetic field with enough precision (excessive magnetic interference). It should be considered to change the location of the SV-MAG-236.

Restoring Use of the SV-ADAHRS-200/201 Internal Magnetometer

If you wish to resume the use the SV-ADAHRS-200/201's internal magnetometer (not use the SV-MAG-236), here are the steps to follow:

1. Disconnect the SV-MAG-236 from SkyView Network.
2. SETUP MENU > SKYVIEW NETWORK SETUP > CONFIGURE > (one more right click) > DETECT (button) > FINISH (button). This "removes" the SV-MAG-236 from the SkyView system.

Any calibrations for the SV-ADAHRS-200/201's internal magnetometer are intact:

- Factory calibration
- In-aircraft ground calibration (if performed)
- In-aircraft air calibration (if performed)

21. Appendix A: Maintenance and Troubleshooting

This appendix provides builders, installers and technicians basic information regarding SkyView maintenance and troubleshooting.

Dynon Avionics' Internet sites may provide more up-to-date information on maintenance and troubleshooting than this document. The following sites should be used a reference:

- http://docs.dynonavionics.com – Dynon Avionics' documentation download area allows SkyView pilots (and prospective SkyView pilots) to download the most up-to-date versions of all Dynon Avionics documentation. Older versions of Dynon Avionics documentation may be shipped with OEM and dealer-provided units, so it is a good idea to periodically check for new versions of documentation.
- http://forum.dynonavionics.com Dynon Avionics' Online Customer Forum is a resource for Dynon Avionics SkyView pilots to discuss installation and operational issues relating to Dynon Avionics products. The Forum is especially useful for pilots with uncommon aircraft or unusual installation issues. For SkyView pilots that cannot call Dynon Avionics Technical Support during our normal business hours, the Forum is a convenient way to interact with Dynon Avionics Technical Support. The Forum allows online sharing of wiring diagrams, photos, and other types of electronic files.

Dynon Avionics Technical Support is available 7:00 AM–4:00 PM (Pacific Time) Monday – Friday. For phone support, call +1(425) 402-0433. Email our tech support staff at support@dynonavionics.com.

There are no user-serviceable parts (such as replaceable fuses) inside any SkyView system unit. Refer all servicing to Dynon Avionics.

Cleaning a SkyView Display

Do not clean SkyView displays or panel units with solvents such as alcohol. If solvents are used, the silk screen lettering on the bezel can be removed, and the display's anti-glare coating can be damaged. Damage from the use of solvents is not covered by warranty.

Dynon Avionics recommends the use of iCloth Avionics wipes for cleaning SkyView displays and panel units. In our testing, this product was found to clean SkyView displays and panel units satisfactorily, without damage. Several sample iCloth Avionics wipes are included with every new SkyView display. Additional iCloth Avionics are available for purchase at http://iclothavionics.com.

Figure 212
iCloth Avionics Wipe

Saving a Screenshot of a Specific Screen

It is sometimes helpful to have a screenshot of a behavior to share with Dynon Avionics Technical Support. Screenshots recorded with this method are far superior to photos because they are always "in focus" and they include *all* of the detain on screen. Screenshots are also useful to have for your records for how your SkyView display was configured, especially detailed menus such as Serial Port Setup, Sensor Input Mapping, etc. To accomplish this:

- Insert a USB flash drive into your SkyView USB port.
- When you want to save a screenshot of the display, press buttons 2 and 7 on that display simultaneously. SkyView will display a message indicating that a screenshot has been saved.
- The screenshot can be found in the "screenshots" folder on the USB flash drive when the USB flash drive is connected to a computer.
- If a Language Pack is installed, two screen shot files will be saved to the USB flash drive – one in English, and one in the language of the Language Pack.
- If requested by Dynon Avionics Technical Support, email the screenshot files to: support@dynonavionics.com.

Savings a Settings File (Configuration of your SkyView system)

It is sometimes helpful to send your system configuration settings to Dynon Avionics Technical Support. A settings file is also useful to have for your records for how your SkyView display was configured. With a Settings File, a new SkyView display can be mostly restored by loading this file. To accomplish this:

- Insert a USB flash drive into your SkyView USB port.
- SETUP MENU > SYSTEM SOFTWARE > EXPORT SETTINGS… > (one more right click).
- For your records, put the USB flash drive (or at least the files) in a safe place.
- If requested by Dynon Avionics Technical Support, email the settings files to: support@dynonavionics.com.

Saving a Dynon Diagnostic File

In rare cases, Technical Support will request you to send a Dynon Avionics Diagnostic File. To accomplish this:

- Insert a USB flash drive into your SkyView USB port.
- SETUP MENU > SYSTEM SOFTWARE > EXPORT DYNON DIAGNOSTIC FILE… > (one more right click).
- This file is too large to send in an email message. If Dynon Avionics Technical Support has requested that you send a Dynon Diagnostic File, go to http://www.dynonavionics.com/docs/upload.html to transmit the file to Dynon Avionics. Please reference any previous communications with Dynon Avionics Technical Support such as Case number, RMA number, etc.

SkyView Displays Error: SYS EVENT 5: SEE SETUP

The System Event diagnostic was added in SkyView Software v13.0. System Event 5 indicates that the SkyView display's internal Solid State Disk (SSD) is experiencing an abnormal number of errors, and thus should be replaced. This feature was added to help detect units that may have potential problems with rebooting in flight or possible screen freezes. To be clear, although System Event 5 is only displayed after updating to v13.0 or later, “System Event 5” *is not caused by updating to v13.0 or later*; v13.0 and later added this diagnostic to *detect an existing situation* (abnormal number of errors with the SSD).

The repair of the internal SSD can only be performed at the Dynon Avionics factory. Repair of SkyView displays for System Event 5 is considered a Warranty Repair, regardless of whether your SkyView display’s warranty is still in effect, or has expired. To arrange for a Return Material Authorization (RMA) for repair of your SkyView display for System Event 5, contact Dynon Avionics Technical Support (contact information at the beginning of this manual).

Before removing your SkyView display to ship to Dynon Avionics, please perform the following procedure to save a backup of your most important settings. You will need a USB flash drive (memory stick) - capacity of 1 GB is adequate, available inexpensively at most office supply and grocery stores. We recommend that you save these files to a USB flash drive not used for anything else.

1. Manually record your HOBBS and TACH time, as these two pieces of information are not saved in the backup file.
2. Power up the SkyView display / system.
3. If you have another USB flash drive inserted into this SkyView display, temporarily remove it (SkyView can only "see" one USB flash drive at a time).
4. Insert the "backup" USB flash drive on the SkyView display you will be sending in for trade-in.
5. Push buttons 7+8 together to enter the SETUP MENU.
6. SETUP MENU > SYSTEM SOFTWARE > EXPORT SETTINGS > (fill in the blank - suggest FINAL BACKUP) > EXPORT (button). The settings files will be saved to the USB flash drive.
7. After the export is complete, remove the USB flash drive
8. Power down the SkyView display.
9. Put the USB flash drive in a safe place

If the worst happens - your SkyView display is damaged or lost in transit, this will allow you to restore MOST settings of your SkyView system.

Returning SkyView Components to Service after Repair

SkyView Network enabled components such as modules and servos are shipped in a “like new” state after repair. To return a SkyView Network component to SkyView Network, follow the following directions. Note that there are 3 different procedures for returning SkyView displays to service, depending on how the display is returned:

SkyView Display Scenario 1: When the documentation furnished with the repaired display indicates that is being returned to you with the exact same settings/configuration as it was sent to Dynon Avionics with

1. In this case, the display contains EXACTLY the same configuration as it did when you sent it in. If your system was working properly before the display failed and was sent in for repair:
    a. Reinstall the display, reconnecting all harnesses and connections as originally installed.
2. Power up the entire SkyView System (all displays, modules, servos, etc.)
3. If this is the only display installed:
    a. Reconfigure SkyView Network under SETUP MENU > SYSTEM SETUP > SKYVIEW NETWORK SETUP > CONFIGURE…
    b. Confirm all SkyView Network components are found, including ALL displays that are in the aircraft.
4. If there is another display installed in the aircraft:
    a. Using a display that never left the aircraft (and is presumably configured and working correctly):
        i. Reconfigure SkyView Network under SETUP MENU > SYSTEM SETUP > SKYVIEW NETWORK SETUP > CONFIGURE…
        ii. Confirm all SkyView Network components are found.
5. Confirm that all settings, behavior, and configuration are normal.
6. If your SkyView system is not working normally, contact Dynon Avionics Technical Support (contact information at the beginning of this manual) for further assistance.

SkyView Display Scenario 2: When repaired display is the ONLY display in the aircraft, and the documentation furnished with the repaired unit indicates that the display was shipped "like new"

1. Reinstall the display, reconnecting all harnesses and connections as originally installed.
2. Power up the entire SkyView System (all displays, modules, servos, etc.).
3. If you have an EXPORT SETTINGS file on a USB flash drive:
    a. Load the EXPORT SETTINGS file via SETUP MENU > SYSTEM SOFTWARE > LOAD FILES.
    b. Confirm that the tail number under SYSTEM SETUP > AIRCRAFT INFORMATION is now set to the actual aircraft tail number, not DYNON. TAIL NUMBER should not include dashes (-) or spaces. Examples:
    Correct: N12AB
    Incorrect: N-12AB or N 12AB
    c. Reconfigure SkyView Network under SETUP MENU > SYSTEM SETUP > SKYVIEW NETWORK SETUP > CONFIGURE…
    d. Confirm all SkyView Network components are found.
    e. Confirm all settings, calibrations, and behaviors are as expected. Dynon Avionics recommends using the Installation Guide to walk through each set up section to confirm proper system operation.

4. If you do not have an EXPORT SETTINGS file, use the SkyView Installation Guide to perform ALL setup and configuration steps as if the entire system is being installed for the first time.

SkyView Display Scenario 3: When other display is part of a multi-display system in the aircraft, and the documentation furnished with the repaired unit indicates that the display was shipped "like new"

1. Your repaired display will have the latest version of SkyView Software on it. All displays in the aircraft must be on the same SkyView Software version. Therefore, before doing anything with the repaired display, confirm that your OTHER (still installed) SkyView displays are running the latest system Software by comparing the version available at http://downloads.dynonavionics.com with the version that is listed in SETUP MENU > LOCAL DISPLAY SETUP > DISPLAY HARDWARE INFORMATION. If the version displayed here does not match what is available on the web site, update these displays to the most current version of Software before proceeding further. Instructions for updating your displays can be found in the Software Updates and File Operations section of this manual.
    a. If you have to updated SkyView Software, look through all the settings in the SETUP MENU after the update, as there may be some new options. Use the Revision History at the beginning of the SkyView System Installation Guide to help determine what has changed between versions.
2. Reinstall the repaired display, reconnecting all harnesses and connections as originally installed.
3. Power up the entire SkyView System (all displays, modules, servos, etc.).
4. From the display that never left the airplane, save your settings files to a USB flash drive by using SETUP MENU > EXPORT SETTINGS …
5. Move this USB flash drive to the repaired display, and load both the .dfg and .sfg files that were created on the USB flash drive by using SETUP MENU > SYSTEM SOFTWARE > LOAD FILES…
6. Set the tail number of the repaired display (SYSTEM SETUP > AIRCRAFT INFORMATION) to DYNON AVIONICS.
7. Going back to a display that never left the aircraft, which is configured properly and working correctly:

It is important that the following steps are done from a display which has remained in the aircraft, and NEVER the newly repaired display. If network configuration is done from the repaired display, it is possible for it to overwrite the correct settings that are stored in your good display with the Dynon Avionics default factory settings.

    a. On the display that stayed in the plane, confirm that the tail number under SYSTEM SETUP > AIRCRAFT INFORMATION is set to the actual aircraft tail number, not DYNON.
    b. On the display that stayed in the plane, reconfigure SkyView Network under SETUP MENU > SYSTEM SETUP > SKYVIEW NETWORK SETUP > CONFIGURE…

c. Confirm all SkyView Network components are found, including ALL displays that are in the aircraft.
d. Exit Setup mode.

8. On the recently repaired display, confirm that the tail number under SYSTEM SETUP > AICRAFT INFORMATION is now set to the actual aircraft tail number, not DYNON. This implies that all settings and configurations have been synchronized from the other display.

In a Multi-display SkyView System, Continuing to Fly with a Missing Display

In a multi-display SkyView system, the system can continue to operate with only one SkyView display. However, this capability depends on all SkyView Network connections being intact so that the remaining SkyView display is electrically connected to all SkyView Network devices.

Each SkyView display has two SkyView Network connections on the back. In the event of a failure of a SkyView display, the two SkyView Network connectors are "electrically common"; even if the SkyView display is failed or powered off, all pins of the upper connector are electrically connected to all pins of the lower connector.

If both SkyView Network connectors are used, when the SkyView display is removed, there is a "disconnect" from the SkyView Network devices connected to the upper SkyView Network connector, and the lower SkyView Network connector.

This is most easily remedied by the installation of a D9M -to-D9M adapter (Figure 213, pictured at right) to "bypass" the removed SkyView display's SkyView Network connections. This connector connects Pin 1 to Pin 1, Pin 2 to Pin 2, etc. This adapter "electrically replaces" the missing SkyView display to allow the remaining SkyView display to communicate with all SkyView Network devices. This adapter can also be easily fabricated with 2 D9M connectors – connect all pins "straight through" – Pin 1 to Pin, Pin 2 to Pin 2, etc. This part pictured in Figure 213 – SkyView Network Bypass Adapter, is available from Dynon Avionics Sales, P/N 101267-000.

Figure 213 – SkyView Network Bypass Adapter P/N 101267-000

If only *one* SkyView Network connector is used on the back of the SkyView display is used, then there is no impact to the SkyView Network from the removal of that SkyView display.

SV-ADAHRS-200/201 Modules

1. Reinstall the ADAHRS in the aircraft.
2. Reconnect all harnesses and connections as originally installed.
3. Power up the entire SkyView System (all displays, modules, servos, etc.).
4. From any display in the aircraft, reconfigure SkyView Network under SETUP MENU > SYSTEM SETUP > SKYVIEW NETWORK SETUP > CONFIGURE…
5. Confirm all SkyView Network components are found, including the reinstalled ADAHRS.
6. If the ADAHRS is the same serial number as the one you returned for repair, no further actions should be required. However, Dynon Avionics recommends double checking the

performance of compass and AOA calibration. If these do not seem to work as well as they previously did, redo those calibrations.

If the ADAHRS is not the same serial number as the one you returned for repair, all setup and calibration steps should be performed because this ADAHRS is being installed for the first time.

Autopilot Servos

1. Reinstall the servo in the aircraft.
2. Reconnect all harnesses and connections as originally installed.
3. Power up the entire SkyView System (all displays, modules, servos, etc.).
4. From any display in the aircraft, reconfigure SkyView Network under SETUP MENU > SYSTEM SETUP > SKYVIEW NETWORK SETUP > CONFIGURE…
5. Confirm all SkyView Network components are found, including the reinstalled servo.
6. Assuming the Autopilot was previously set up and working correctly, you only need to recalibrate the servos by going to SETUP MENU > HARDWARE CALIBRATION > AP SERVO CALIBRATION > CALIBRATION and following the on-screen instructions.

All other SkyView Network Components

1. Reinstall the SkyView Network component in the aircraft.
2. Reconnect all harnesses and connections as originally installed.
3. Power up the entire SkyView System (all displays, modules, servos, etc.).
4. From any display in the aircraft, reconfigure SkyView Network under SETUP MENU > SYSTEM SETUP > SKYVIEW NETWORK SETUP > CONFIGURE…
5. No further action should be required.

Operational Status

SkyView displays give users access to vital operational information in the Display Hardware Information Page (SETUP MENU > LOCAL DISPLAY SETUP > DISPLAY HARDWARE INFORMATION). Note that the information in this menu may be useful during troubleshooting. The information here cannot be edited on this screen; however, some parameters are editable by the user on other screens.

This menu contains the following information:

- Display serial number
- Software version
- Display input voltage
- SV-BAT-320 charge state
- Operational state of the internal battery management circuitry
- Operational state of the internal voltage rails
- Screen brightness level
- Local light sensor output
- External light sensor output
- Brightness level output
- Contact input status

- Serial port status and current baud rate
- Button and joystick states
- Operational hours

Display Serial Number

The serial number of the display is noted here as SERIAL NUMBER: XXXXXX.

Display Software Version

The Software version of the display is noted here as SOFTWARE VERSION: X.X.XX.XXX.

Display Input Voltage

The display's input voltage is list here as VOLTAGE: XX.XXV.

SV-BAT-320 Charge State

If there is an SV-BAT-320 connected to the display, its voltage level is shown here as BATTERY STATUS: XX.XXV. The battery is fully charged at 12.25V. Charging a completely discharged battery may take up to 4 hours. To conserve your aircraft battery, the SV-BAT-320 is only charged with SkyView detects your alternator/generator to be online.

Operational State of the Internal Battery Management Circuitry

The operational state of the display's internal battery management circuitry is listed here. If there is an SV-BAT-320 connected to the display, you will see one of the following states:

- CHARGING: SkyView system voltage is above 12.25V. SkyView is running on master power and is charging the SV-BAT-320.
- DISCHARGING: SkyView system voltage is below 10V. SkyView runs on the SV-BAT-320. The SV-BAT-320 discharges.
- CHARGED: SkyView system voltage is above 12.25V, and the SV-BAT-320 is fully charged.
- STANDBY: SkyView system voltage is above 10V, but below 12.25V: SkyView runs on master power but does not charge the SV-BAT-320. To conserve your aircraft battery, the SV-BAT-320 is only charged with SkyView detects your alternator/generator to be online.
- NO BATTERY: No SV-BAT-320 is connected.

Operational State of the Internal Voltages

There are several important voltages in the display. You will find their statuses here. If they are all operating at specified levels, then you will see OK. If any voltage is operating out of specification, you will see X.XV FAIL for that voltage.

Screen Brightness Level

The screen's brightness level is shown here as a percent. For example, 100.0 means 100% and 50.0 means 50%.

Local Light Sensor Output

Each SkyView display has an integrated light sensor on the front bezel and its output is shown here.

External Light Control Signal Output

SkyView displays are compatible with external light control signals. The state of the external light control signal is shown here.

Brightness Level Output

SkyView displays can output a brightness level signal to control the brightness of compatible external equipment screens. The level of the output is shown here.

Contact Input Status

Each SkyView display has four contact inputs. The status of each contact input is shown here as either HIGH or LOW. CONTACT INPUT 1 is implemented as EXTERNAL LEVEL button. CONTACT INPUT 2 is implemented as EXTERNAL GO AROUND button. CONTACT INPUT 3 and CONTACT INPUT 4 have not been implemented.

Serial Port Status and Current Baud Rate

Each SkyView display has five general purpose serial ports. The status of each serial port is shown with transmit (TX) and receive (RX) character counters and the ports current baud rate. The character counters show any outgoing or incoming character and roll over at 9999.

Button and Joystick States

The state of each button is shown on the BUTTON STATE line. You will see 1 2 3 4 5 6 7 8 on the line. When you press a button, its respective number on the button state line is replaced with an asterisk (*). For example, if you press and hold button 3, you will see 1 2 * 4 5 6 7 8.

The state of each joystick is shown on the JOYSTICK STATE line. Each joystick is denoted with an L or R (left or right, respectively), a counter to show joystick turns, and the letters UDLRC to denote moving the joystick **U**p, **D**own, **L**eft, **R**ight, and *C*enter (when pressed like a button).

Operational Hours

This is a running count of the hours a screen has been on since was initially manufactured.

Instructions for Continued Airworthiness

Follow these steps for continued airworthiness:

- Conduct any periodic checks that are mandated by local regulations (IE, FAA for US Aircraft), such as (but not limited to):
    - Transponder test
    - Pitot / Static system test - refer to “Performing Pitot/Static Checks” near the end of the SV-ADAHRS-200/201 Installation and Configuration section.
- Annually test the SV-BAT-320 Backup Battery.
- Annually perform a ZERO PRESSURE IAS/AOA CALIBRATION
- SV-COM-C25/X83, SV-COM-XPNDR-261/262, SV-ADSB-470/472 (if installed) – inspect antennas and coaxial cables for wear, continued correct installation, etc. See those sections for more detail.

- Autopilot servos – see Autopilot Servo Installation, Configuration, and Calibration section for details.
- Any other issues should be addressed on an as-needed basis.

Annual SV-BAT-320 Test

This procedure assumes that an Initial SV-BAT-320 Test has been performed – see SV-BAT-320 Backup Battery Installation, Initial SV-BAT-320 Test.

As with all batteries, the SV-BAT-320 is an electrochemical, rather than a purely electronic device. Thus, its capacity will gradually diminish over time. The usable lifetime of an SV-BAT-320 is determined by a number of factors, including age, number of discharge/charge cycles, temperature, etc. An annual test should be performed on each SV-BAT-320 to ensure it remains capable of powering a SkyView display and devices powered by a SkyView display (see System Planning, Power for details), for at least 60 minutes if aircraft power is lost.

SkyView records the date of successful SV-BAT-320 tests. After one year has passed since a successful SV-BAT-320 test, SkyView will display a Yellow Battery Alert icon (Figure 215 below). A BATTERY TEST NEEDED message (Figure 214 below) will also appear in the Alerts section in the lower right corner of your SkyView display (displayed when you push Button 8 to display Messages, Alerts, and Cautions).

Figure 215
Battery Alert icon

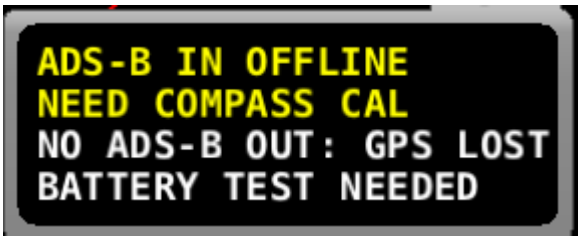

Figure 214 – BATTERY TEST NEEDED message

If your SkyView system has more than one SkyView display with an SV-BAT-320 installed, perform the following test individually on each SkyView display / SV-BAT-320.

Test Procedure

1. The SV-BAT-320 must be fully charged prior to commencing this test. Reference SV-BAT-320 Backup Battery Installation, Charging the SV-BAT-320 for information on charging the SV-BAT-320.
2. Apply power to the SkyView display you will be testing. If all of your SkyView displays power up from a single switch or circuit breaker, power down any display other than the unit on which you will perform the SV-BAT-320 test – push and hold Button 1 (HOLD TO POWER DOWN).
3. Remove power to the SkyView display you will be testing. If all of your SkyView displays power up (and power down) from a single switch or circuit breaker, push the POWER OFF button on the SkyView display(s) that are not being tested. That SkyView display will be powered off.

4. On the SkyView display that is being tested, during the 30 second power off countdown, press the TEST BAT button above button 8 (far right button) – see Figure 216 below.

Figure 216 – TEST BAT Button Appears After Removing Power to SkyView Display

5. The BATTERY TEST screen will appear displaying the status of the test. If the SV-BAT-320 is able to power the system for at least 45 minutes, the SV-BAT-320 passes this test.
6. After the test completes (successfully, or unsuccessfully), the SkyView display will automatically power off.
7. To see the results of the test, enter the SETUP MENU > LOCAL DISPLAY SETUP > BATTERY BACKUP (SV-BAT-320) STATUS>TEST RESULTS. Make sure the TEST RESULT says PASS.
8. The BATTERY TEST can be aborted by pressing the PWR OFF button.

Repeat the test procedure for each SkyView display that has an SV-BAT-320 installed.

This test discharges the SV-BAT-320. Recharging the SV-BAT-320 after the test is recommended, either by flying for approximately four hours or reference SV-BAT-320 Backup Battery Installation, Charging the SV-BAT-320 for information on charging the SV-BAT-320.

In the Event of an SV-BAT-320 Test Failure…

See http://dynonavionics.com/docs/support_returns.html for the most current information on Dynon Avionics warranty terms and conditions.

Note that if an SV-BAT-320 is replaced under warranty, the defective SV-BAT-320 must be returned (at customer's expense) to Dynon Avionics to avoid being charged full purchase price of a new SV-BAT-320.

If a SV-BAT-320 does not pass an annual test, and it is still within warranty, contact Dynon Avionics Technical Support (contact information at the beginning of this manual) for further assistance. Please have the S/N of the SV-BAT-320 (printed on the SV-BAT-320 product label) available when you contact Technical Support. See also SV-BAT-320 Backup Battery Installation, Returning an SV-BAT-320 to Dynon Avionics for Exchange (Warranty Replacement) for additional information.

If a SV-BAT-320 does not pass an annual test, and is no longer within warranty, dispose of the used SV-BAT-320 (see below) and purchase a new SV-BAT-320 from Dynon Avionics or a Dynon Avionics dealer. An SV-BAT-320 cannot be repaired or rebuilt.

Please dispose of a non-functional SV-BAT-320 in a responsible manner. The SV-BAT-320 is a Lithium-Ion battery, similar in construction to cordless tool or laptop computer batteries and thus can be disposed of (recycled) wherever cordless tool or laptop computer battery recycling is available. For a list of recycling locations in

the USA, call 1-800-8-BATTERY or see the Call 2 Recycle website at http://www.rbrc.org.

Troubleshooting

The Display Hardware Information Page (SETUP MENU > LOCAL DISPLAY SETUP > DISPLAY HARDWARE INFORMATION) can be a valuable resource when troubleshooting SkyView and is described in the previous section.

If the suggestions below do not help, or your issue is not listed below, please contact Dynon Avionics Technical Support (contact information at the beginning of this manual).

Network Configuration Does Not Work or SkyView Network Module Is Not Working Properly

If you try to configure a SkyView network and it does not work, try the following:

- Check network wiring and try again. There may be a short or an open somewhere.
- Unplug network modules one by one and try again. It is possible that one of the modules could cause the network to stop functioning.
- Try again.
- For modules such as the SV-ADAHRS-200/201, the SV-EMS-220/221, and SV-ARINC-429, observe the red LED light near the SkyView Network connector:
    - Flashing Fast: The module is operating normally and is configured and communicating on a SkyView Network.
    - Flashing Slowly: The module is operating normally, but is not active on SkyView Network.
    - Off: The module is not receiving power (from a SkyView Network / Display)
    - On Solid - the module is receiving power, but is not operating normally.

SkyView Reports STANDBY NETWORK ERROR

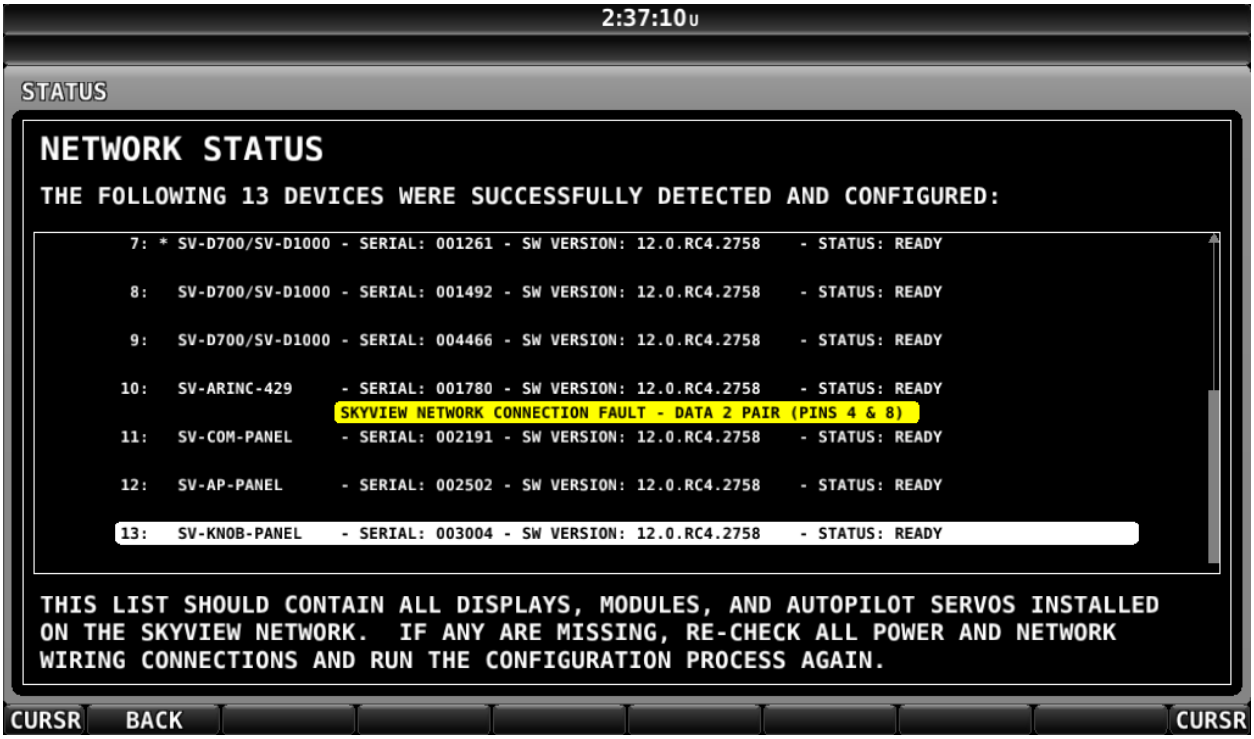

Figure 217 – Troubleshooting STANDBY NETWORK ERROR message

SkyView has detected a problem with the SkyView Network wiring between one or more modules. Go to SETUP MENU > SYSTEM SETUP > SKYVIEW NETWORK SETUP > NETWORK STATUS for a description of the problem. Module failures and/or wiring faults will be annunciated here to aid troubleshooting. The “PINS 4 & 8” or “PINS 1 & 6” references the 9-pin connector of the SkyView Network cable. The fault will likely be listed below the component(s) that SkyView can see the fault in. This may help you narrow down the wiring run or connector that is faulty.

For example, a “SKYVIEW NETWORK CONNECTION FAULT – DATA 2 PAIR (PINS 4 AND 8)” listed below an SV-ADAHRS-200 listing in the network status page means that pins 4 and 8 on a SkyView Network harness or connector that goes to that component has a connectivity problem. This could be a broken wire, swapped wires, bad connection, etc., and should be analyzed with a multimeter or other direct method.

If the fault were instead listed under a SkyView display listing in the network status page, that means that the fault is seen on all devices connected to that display, and is likely due to a connectivity issue at or very near the display in your SkyView Network wiring scheme.

Compass Calibration Fails

If you try to calibrate your compass and it does not work, try the following:

- Ensure SkyView is receiving data from the system’s GPS receiver – a message: VALID GPS SIGNAL REQUIRED TO CALIBRATE COMPASS will appear if GPS data is not available.

- Ensure the SkyView network status includes the ADAHRS you're trying to calibrate. Use the Network Status Wizard and confirm that the ADAHRS is present in the system.
- Ensure the ADAHRS location is compatible with the requirements outlined in the General System Installation Tips Section of this guide, especially the discussion of external magnetic interference.

Display does not Turn On

If your SkyView display does not turn on, try the following:

- Check power wiring and fuses and try again. There may be a short or an open somewhere.
- Observe the lights on the Ethernet port. Unlike other Ethernet ports, these lights are used for display status:
    - Yellow light on: Power on pins 1/20 (power/ground).
    - Yellow light off: Display not receiving power.
    - Green light flashing: Normal when display is turned on, or turned off with a SV-BAT-320 connected.
    - Green light solid on or off: Something is wrong with the SkyView display. Contact Dynon Avionics Technical Support (contact information at the beginning of this manual) for further support.

No GPS

GPS is an essential part of a SkyView system. If you do not have a working GPS, you cannot set the system time, calibrate the compass, or use the moving map. If you are experiencing these symptoms, try the following:

- If you have installed an SV-GPS-2020, its SERIAL IN FUNCTION must be set to POS 1.
- If you have installed an SV-GPS-250 (but not an SV-GPS-2020), its SERIAL IN FUNCTION must be set to POS 1.
- If you have both an SV-GPS-2020 and an SV-GPS-250, the SV-GPS-250 should be set to POS 2.
- Check wiring and connections. Make sure all wiring runs are complete, that connections are solid, and that transmit (TX) and receive (RX) are not swapped. If you have more than one SkyView display, make the same serial port connections to ALL SkyView displays. If you are using the SV-GPS-250/2020 GPS Receiver, make sure that power and ground wires are also installed correctly.
- Ensure that the GPS serial port's parameters are configured correctly. Go to the Serial Port Setup Menu (SETUP MENU > SYSTEM SETUP > SERIAL PORT SETUP > SERIAL PORT # SETUP) and check the input device, function, baud rate, and output device properties of the port. This menu also contains serial transmit (TX) and receive (RX) counters. These counters show activity on the transmit and receive lines of that serial port and can indicate if the GPS is active on that port. Reference the SV-GPS-250/2020 Serial Data Connection Section for SV-GPS-250/2020 serial port settings. Also reference the RS-232 Serial Devices Section on page 4-21 of this guide if a comprehensive explanation of SkyView serial connections is necessary.

Engine Sensor Does Not Show Up Onscreen

Make sure the sensor is installed, defined, mapped, and configured according to the instructions found in SV-EMS-220/221 Installation and Configuration.

MAP Button Is No Longer Available

SkyView displays are shipped with a 30 Flight Hour trial of the SkyView Map. After 30 Flight Hours have elapsed (the trial has expired), the next time SkyView is powered up, the MAP button will not appear. If you wish to continue using SkyView's Map functions, see SV-MAP-270 Navigation Mapping License Purchase and Setup.

22. Appendix B: Specifications

SkyView / Dynon Avionics Minor Equipment Weights

For Major Equipment Weights, see System Planning, Major Unit Physical Specifications.

SkyView / Dynon Avionics Equipment Description	Approx. Weight
Ammeter Shunt P/N 100412-000	0.32 lb. (0.14 kg)
AOA/Pitot Probe, unheated (100141-000)	0.36 lb. (0.16 kg)
Antenna – 978 MHz (for ADS-B)	0.05 lb. (0.02 kg)
Antenna – 1090 MHz (for Transponder)	0.05 lb. (0.02 kg)
AOA/Pitot Probe, heated with controller (100667-000)	0.71 lb. (0.32 kg)
AOA/Pitot Boom Probe, unheated (100532-000)	0.27 lb. (0.12 kg)
Carburetor Air Temperature Sensor P/N 100468-000	0.13 lb. (0.06 kg)
Capacitance to Voltage Converter (100654-000) (single)	0.08 lb. (0.04 kg)*
CHT Sensor (100404-000) (single)	0.08 lb. (0.04 kg)*
CHT Sensor (100578-000) (single)	0.04 lb. (0.02 kg)*
EGT Sensor (100405-000, -001, -002) (single)	0.09 lb. (0.04 kg)*
EMS 37-pin Main Sensor Harness (100399-000)	0.81 lb. (0.37 kg)
EMS EGT-only 2-cylinder 25-pin Thermocouple Wire Harness (100399-004)	0.22 lb. (0.10 kg)
EMS EGT/CHT 4-cylinder 25-pin Thermocouple Wire Harness (100399-001)	0.71 lb. (0.32 kg)
EMS EGT/CHT 6-cylinder 25-pin Thermocouple Wire Harness (100399-002)	0.69 lb. (0.31 kg)
Encoder Converter Module, Serial-to-Gray Code (100362-000)	0.10 lb. (0.05 kg)
Fluid Pressure Sensor – Kavlico, with pigtail (101690-000, 101691-000, 101715-000, 101716-000, 101692-000, 101693-000)	0.11 lb. (0.05 kg)*
Fluid Pressure Sensor – VDO-style (legacy) (100409-000, 100409-001, and 100409-002)	0.13 lb. (0.06 kg)
Fuel Flow Transducer P/N 100403-003 (single)	0.24 lb. (0.11 kg)*
Manifold Pressure Sensor P/N 100434-000	0.20 lb. (0.09 kg)
OAT Sensor (100433-000) / SV-OAT-340 (100433-003)	0.09 lb. (0.04 kg)
SV-ETHERNET-3CC	0.07 lb. (0.03 kg)
SV-HARNESS-D37	0.47 lb. (0.21 kg)
SV-NET-1.5CC	0.16 lb. (.071 kg)
SV-NET-3CC	0.21 lb. (0.10 kg)
SV-NET-6CC	0.33 lb. (0.15 kg)
SV-NET-10CP	0.49 lb. (0.22 kg)
SV-NET-15CP	0.68 lb. (0.31 kg)
SV-NET-20CP	0.87 lb. (0.40 kg)
SV-NET-25CP	1.07 lb. (0.49 kg)
SV-NET-30CP	1.26 lb. (0.57 kg)
SV-NET-HUB	0.19 lb. (0.09 kg)
SV-NET-SERVO	0.70 lb. (0.32 kg)
SV-NET-SPL	0.20 lb. (0.09 kg)
SkyView Video Input Adapter (102211-000)	0.19 lb. (0.06 kg)*
SkyView Wi-Fi Adapter with pigtail (102045-000)	0.06 lb. (0.02 kg)*

Table 100 – SkyView Minor Equipment Weights

*Single sensor / accessory. Multiply by the number for total weight of sensors / accessories.

SkyView Compatible Engine Sensors (sold by Dynon Avionics)

Description	Range/Type	Fittings	Dynon Avionics P/N
Amps Shunt or Ammeter Shunt	0-60 A (can be configured to display -60 A to +60 A)	2 each 1/4" Ring Terminals	100412-000
Capacitance to Voltage Converter for Vans Capacitive Plates	50 pF to 1000 pF	BNC connector to Van's RV fuel tank sensor	100654-000
Carburetor Air Temperature	-50° F to 150° F	1/4-28 UNF	100468-000
CHT (for Jabiru)	J-Type Thermocouple	12mm Ring Terminal	100578-000
CHT (for Lycoming/ Continental/Superior)	J-Type Thermocouple	Bayonet 3/8-24 UNF	100404-000
EGT (for Jabiru)	K-Type Thermocouple	1/8" hole, Hose Clamp 3/4" – 1 3/4"	100405-002
EGT (for Lycoming/ Continental/Superior)	K-Type Thermocouple	1/8" hole, Hose Clamp, 1" – 2"	100405-000
EGT (for Rotax)	K-Type Thermocouple	1/8" hole, Hose Clamp 1/4" – 1 1/4"	100405-001
Fuel Flow Transducer (Electronics International FT-60)	0.6 GPH -70+ GPH	1/4" Female NPT	100403-003
Fuel Pressure (Legacy – no longer sold by Dynon Avionics)	0-30 PSI (carbureted)	1/8-27 NPT	100411-000
	0-80 PSI (fuel injection)		100411-001
Fuel Pressure – Kavlico	0-5 PSI (carbureted)	1/8-27 NPT	100715-000
	0-15 PSI (carbureted		101690-000
	0-50 PSI (fuel injection)		101716-000
	0-75 PSI (fuel injection)		101692-000
Manifold Pressure (MAP)	0-60 In Hg	Nipple fitting: 1/4" ID tubing recommended	100434-000
OAT Sensor	-40° F to 150° F	3/8" hole in fuselage, 9/16" nut	100433-001 100433-002 100433-003

Description	Range/Type	Fittings	Dynon Avionics P/N
Oil Pressure (Legacy – no longer sold by Dynon Avionics)	0-150 PSI	1/8-27 NPT	100411-002
Oil Pressure – Kavlico	0-150 PSI	1/8-27 NPT	101693-000
Oil Temperature (for Lycoming/ Continental/Superior)	-10° F to 300° F	5/8-18 UNF	100409-001
Oil Temperature (for older Continental 0-200s)	-10° F to 300° F	1/8-27 NPT	100409-000

Table 101 – SkyView Compatible Engine Sensors

SV-BAT-320 Specifications

Specification	Parameter	Notes
Cell generic description	Li-Ion 18650	
Cell chemistry	Li-Ion	Lithium-Ion
Cell Voltage	3.7V	Total pack: 11.1V
Cell Current	2200 mAh	Total pack: 4400 mAh
Number of cells	6	2 cells in parallel, x3 in series
Protection from over-charge?	Yes	Integrated protection circuit
Protection from over-discharge?	Yes	
Protection from short circuit?	Yes	
Protection from over-current?	Yes	
Safe to be shipped? Air – IATA Sea – IMDG Road – ADR Rail – RID	Yes	SV-BAT-320 has minimal lithium content, below threshold(s) considered to be dangerous.
Charging System	Dynon Avionics SV-D600, or SV-D700, or SV-D900, or SV-D1000, or SV-D1000T	Do not use any other type of charging system to charge SV-BAT-320.

Table 102 – SV-BAT-320 Specifications

SV-XPNDR-261 Specifications

Specification	Characteristics
Compliance	ETSO 2C112b Class 1 Level 2els (see below), ETSO C166a Class B0, TSO C112c Class 1 Level 2els (see below), TSO C166b Class B1S
	Level 2 (Comm B) Level 1 + receive and transmit 112 Bit Messages Level 2A Same as Level 2 without the support air-initiated Comm B messages
	e – Extended squitter, the ability to send ADS-B/1090ES data. This requires an external GPS (certified GPS units only). Mode S transponders with 1090ES capability can always send ADS-B data out but may not be able to receive ADS-B data in to receive traffic information. The actual data out and data-in capabilities for each model are shown out in the table above.
	l – Elementary surveillance, i.e. basic position reporting derived from SSR radar, enhanced in the case of a Mode S environment with higher resolution (25') pressure altitude, unique ICAO aircraft ID and other Mode S capabilities. Note that this is different than 1090ES/ADS-B data-out capabilities.
	s – Surveillance Identifier (SI) code. Used by Mode S transponders and Mode S equipped SSR to limit interrogations to specific transponders.
FCC Identification	VZI00745
Applicable documents	EUROCAE ED-73C, EUROCAE ED-14F (RTCA DO-160F), RTCA DO-181D, RTCA DO-260B
Software	ED-12B (RTCA DO-178B) Level B
Hardware	DO-254 Level C
Power Requirements	11 – 33 Volts DC. Typical 6 Watts @ 14Volts.
Altitude	35,000 feet
Humidity	95% @ +50°C for 6 hours; 85% @ +38°C for 16 hours. Tested to Category A in DO-160F

Operating Temperature	-20°C to +70°C
Transmitter Frequency	1090MHz ± 1MHz
Transmitter Power	250 Watts nominal; 125 Watts minimum at antenna after allowing for 0.5dB connector losses and 1.5dB cable losses.
Transmitter Modulation	6M75 V1D
Receiver Frequency	1030 MHz
Receiver Sensitivity	-74Dbm ± 3Db
Physical Specifications (in the mounting tray)	
Height	48mm (1.9”)
Width	66mm (2.5”)
Length	160mm (6.3”)
Weight	0.77lbs. (350 g)

Table 103 – SV-XPNDR-261 Specifications

SV-XPNDR-262 Specifications

Specification	Characteristics
Compliance	ETSO 2C112b Class 2 Level 2els (see below), ETSO C166a Class B0, TSO C112c Class 2 Level 2els (see below), TSO C166b Class B0
	Level 2 (Comm B) Level 1 + receive and transmit 112 Bit Messages Level 2A Same as Level 2 without the support air-initiated Comm B messages
	e – Extended squitter, the ability to send ADS-B/1090ES data. This requires an external GPS (certified GPS units only). Mode S transponders with 1090ES capability can always send ADS-B data out but may not be able to receive ADS-B data in to receive traffic information. The actual data out and data-in capabilities for each model are shown out in the table above.
	l – Elementary surveillance, i.e. basic position reporting derived from SSR radar, enhanced in the case of a Mode S environment with higher resolution (25') pressure altitude, unique ICAO aircraft ID and other Mode S capabilities. Note that this is different than 1090ES/ADS-B data-out capabilities.

	s – Surveillance Identifier (SI) code. Used by Mode S transponders and Mode S equipped SSR to limit interrogations to specific transponders.
FCC Identification	VZI00675
Applicable documents	EUROCAE ED-73C, EUROCAE ED-14F (RTCA DO-160F), RTCA DO-181D, RTCA DO-260B
Software	ED-12B (RTCA DO-178B) Level B
Hardware	DO-254 Level C
Power Requirements	11 – 33 Volts DC. Typical 5 Watts @ 14Volts.
Altitude	< 15,000 feet
Speed	< 175 knots
Humidity	95% @ +50°C for 6 hours; 85% @ +38°C for 16 hours. Tested to Category A in DO-160F
Operating Temperature	-20°C to +70°C
Transmitter Frequency	1090MHz ± 1MHz
Transmitter Power	125 Watts nominal; 71 Watts minimum at antenna after allowing for 0.5dB connector losses and 1.5dB cable losses.
Transmitter Modulation	6M75 V1D
Receiver Frequency	1030 MHz
Receiver Sensitivity	-74Dbm ± 3Db
Physical Specifications (in the mounting tray)	
Height	48mm (1.9”)
Width	66mm (2.5”)
Length	160mm (6.3”)
Weight	0.77lbs. (350 g)

Table 104 – SV-XPNDR-262 Specifications

SV-XPNDR-261/262 Environmental Qualification Forms

Nomenclature:	TT21 Mode S Transponder (Dynon Avionics SV-XPNDR-262)	
Part Number: 00675-(XX)	ETSO: 2C112b, C166a	
Manufacturer:	Trig Avionics Limited	
Address:	Heriot Watt Research Park, Riccarton, Currie, Scotland, EH14 4AP	
Conditions	**DO-160F Section**	**Description of Conducted Tests**
Temperature and Altitude	4.0	Equipment tested to Categories A2, C1
Low temperature ground survival	4.5.1	-55°C
Low temperature short-time operating	4.5.1	-40°C
Low temperature operating	4.5.2	-20°C
High temperature operating	4.5.4	+70°C
High temperature short-time operating	4.5.3	+70°C
High temperature ground survival	4.5.3	+85°C

Loss of Cooling	4.5.5	Cooling air not required (+70°C operating without cooling air)
Altitude	4.6.1	35,000 feet
Decompression	4.6.2	8,000 to 35,000 feet in 15 seconds
Overpressure	4.6.3	-15,000 feet
Temperature Variation	5.0	Equipment tested to Category C
Humidity	6.0	Equipment tested to Category A
Operational Shocks	7.2	Equipment tested to Category B
Crash Safety	7.3	Equipment tested to Category B type 5
Vibration	8.0	Aircraft zone 2; type 3, 4, 5 to category S level M, type 1 (Helicopters) to category U level G
Explosion	9.0	Equipment identified as Category X – no test required
Waterproofness	10.0	Equipment identified as Category X – no test required
Fluids Susceptibility	11.0	Equipment identified as Category X – no test required
Sand and Dust	12.0	Equipment identified as Category X – no test required
Fungus	13.0	Equipment identified as Category X – no test required
Salt Spray	14.0	Equipment identified as Category X – no test required
Magnetic Effect	15.0	Equipment tested to Category Z
Power Input	16.0	Equipment tested to Category BX
Voltage Spike	17.0	Equipment tested to Category B
Audio frequency conducted susceptibility	18.0	Equipment tested to Category B
Induced signal susceptibility	19.0	Equipment tested to Category AC
Radio frequency susceptibility	20.0	Equipment tested to Category TT
Radio frequency emission	21.0	Equipment tested to Category B
Lightning induced transient susceptibility	22.0	Equipment identified as Category XXXX – no test required
Lightning direct effects	23.0	Equipment identified as Category X – no test required
Icing	24.0	Equipment identified as Category X – no test required
Electrostatic Discharge	25.0	Equipment identified as Category X – no test required
Fire, Flammability	26.0	Equipment identified as Category C

Nomenclature:	TT22 Mode S Transponder (Dynon Avionics SV-XPNDR-261)
Part Number: 00745-(XX)	ETSO: 2C112b, C166a
Manufacturer:	Trig Avionics Limited
Address:	Heriot Watt Research Park, Riccarton, Currie, Scotland, EH14 4AP

Conditions	DO-160F Section	Description of Conducted Tests
Temperature and Altitude	4.0	Equipment tested to Categories A2, C1
Low temperature ground survival	4.5.1	-55°C
Low temperature short-time operating	4.5.1	-40°C
Low temperature operating	4.5.2	-20°C
High temperature operating	4.5.4	+70°C
High temperature short-time operating	4.5.3	+70°C
High temperature ground survival	4.5.3	+85°C
Loss of Cooling	4.5.5	Cooling air not required (+70°C operating without cooling air)
Altitude	4.6.1	35,000 feet
Decompression	4.6.2	8,000 to 35,000 feet in 15 seconds
Overpressure	4.6.3	-15,000 feet
Temperature Variation	5.0	Equipment tested to Category C
Humidity	6.0	Equipment tested to Category A
Operational Shocks	7.2	Equipment tested to Category B
Crash Safety	7.3	Equipment tested to Category B type 5
Vibration	8.0	Aircraft zone 2; type 3, 4, 5 to category S level M, type 1 (Helicopters) to category U level G
Explosion	9.0	Equipment identified as Category X – no test required
Waterproofness	10.0	Equipment identified as Category X – no test required
Fluids Susceptibility	11.0	Equipment identified as Category X – no test required
Sand and Dust	12.0	Equipment identified as Category X – no test required
Fungus	13.0	Equipment identified as Category X – no test required
Salt Spray	14.0	Equipment identified as Category X – no test required
Magnetic Effect	15.0	Equipment tested to Category Z
Power Input	16.0	Equipment tested to Category BX
Voltage Spike	17.0	Equipment tested to Category B

Audio frequency conducted susceptibility	18.0	Equipment tested to Category B
Induced signal susceptibility	19.0	Equipment tested to Category AC
Radio frequency susceptibility	20.0	Equipment tested to Category TT
Radio frequency emission	21.0	Equipment tested to Category B
Lightning induced transient susceptibility	22.0	Equipment identified as Category XXXX – no test required
Lightning direct effects	23.0	Equipment identified as Category X – no test required
Icing	24.0	Equipment identified as Category X – no test required
Electrostatic Discharge	25.0	Equipment identified as Category X – no test required
Fire, Flammability	26.0	Equipment identified as Category C

Table 105 – SV-XPNDR-261/262 Qualification Forms

SV-XPNDR-261/262 ADS-B Information

SV-XPNDR-261/262 transponder modules include support for Extended Squitter ADS-B out. The SV-XPNDR-261/262 with SV-XPNDR Software 2.02 or higher is a DO-260B compliant broadcast participant.

ADS-B Parameters Supported

The following table lists the ADS-B parameters that are transmitted by the SV-XPNDR-261/262 transponder when connected to an appropriate GPS receiver.

Parameter		BDS Register
SPI		0,5
Emergency Indicator		0,5
Barometric Altitude		0,5
Quality Indicator (NIC)		0,5
Airborne Position	Latitude	0,5
	Longitude	0,5
Quality Indicator (NIC)		0,6
Surface Position	Latitude	0,6
	Longitude	0,6
Surface Ground Speed		0,6
Surface Ground Track		0,6
Aircraft Identification		0,8
Airborne Ground Velocity		0,9
Geometric to Barometric altitude difference		0,9
Geometric Vertical Rate		0,9
Squawk Code		6,1
Emergency Status		6,1
Quality Indicator (NACp)		6,5
Quality Indicator (NACv)		6,5
Quality Indicator (SIL)		6,5
Version Indicator		6,5

Surface Length/Width	6,5
Surface Antenna Offset	6,5

Table 106 – SV-XPNDR-261/262 ADS-B Parameters Supported

In all cases, uncompensated latency due to the transponder is less than 10 milliseconds. Analysis of the system latency should add this to the latency of the GPS system and the transmission time of the position data from the GPS to the transponder to determine the overall latency.

14 CFR § 91.227 Compliance

The Dynon Avionics SV-XPNDR-261 transponder can be connected to the following GPS units to form the basis of a 14 CFR § 91.227 compliant ADS-B Out installation:

- Dynon Avionics SV-GPS-2020 (connected to SkyView display)
- Avidyne IFD440/IFD540 (connected directly)
- FreeFlight 1201/1204 (connected directly)
- Garmin GNS 400W/500W series (connected directly)
- Trig Avionics TN70 (connected directly)

For installations seeking certification to 14 CFR § 91.227 or other applicable standards, additional compliance information may be available on request from Dynon Avionics or Trig Avionics Limited.

AMC 20-24 Compliance

The Dynon Avionics SV-XPNDR-261 or Dynon Avionics SV-XPNDR-262 transponder can be connected to the following GPS units to form the basis of an AMC20-24 compliant ADS-B installation:

- Avidyne IFD440/IFD540 (connected directly)
- FreeFlight 1201/1204 (connected directly)
- Garmin GNS 400W/500W series (connected directly)
- Trig Avionics TN70 (connected directly)

For installations seeking certification to AMC 20-24 or other applicable standards, additional compliance information is available on request from Trig Avionics Limited.

Automatic Air/Ground Determination

The SV-XPNDR-261/262 can report ADS-B surface and airborne messages. This can be accomplished via a squat switch input that is designed to be used with an automatic air/ground switching device, or via automatic detection. These options are fully explained in section SV-XPNDR-261/262 Installation and Configuration of this guide.

SV-COM-C25 Technical Specifications

Specification	Characteristics
Current Requirement	RX: 200 mA / TX: 3.0A
FCC Identification	WU6-310001-000
Voltage Input	10 V to 30 V DC
Temperature Range	-20° C to +60° C (-4° F to +140° F)
Audio	
Microphone	150 Ohms nominal input impedance 70 mV RMS for 70% modulation Maximum input 2.0V P-P
Headphone	150 Ohms nominal output impedance 150 mW output power into 150 Ohms Short Circuit Protected
Transmitter	
Antenna Requirements	50 Ohms impendence BNC connector VSWR < 2.5:1
Audio Distortion	< 10 %
Audio Frequency Response	200 to 3.0 kHz
Carrier Noise Level	> 35 dB down
Class	4
Duty Cycle	20 %
Frequency Range	118.000 – 136.975 MHz
Frequency Tolerance	+/- 5 PPM from -20 °C to +60 °C
Modulation Capability	85 % Maximum
Modulation	A3E
Output Power	6W minimum (10V DC)
Sidetone Level	Up to 150 mW into 150 Ohms
Stuck Microphone Timeout	31 to 34 Seconds
Receiver	
Audio Frequency Response	150 to 3.0 kHz
Channel Size	25 kHz
Class	D
Frequency Range	118.000 – 136.975 MHz
Frequency Tolerance	+/- 5 PPM from -20 °C to +60 °C
Selectivity	> 60 dB@ +/- 25 kHz
Sensitivity	-111 dBm @ 12 dB
Squelch	Automatic, -1 µV setpoint

Table 107 – SV-COM-C25 Specifications

SV-COM-X25 (TY91LA VHF Radio Unit) Technical Specifications

Specification	Characteristics
Compliance	ETSO 2C169a Class C, 4 ETSO 2C128 TSO C169a Class C, 4, TSO C128a
FCC Identification	VZI00882
Applicable documents	EUROCAE ED-23C EUROCAE ED-67 EUROCAE ED-14F (RTCA DO-160F) RTCA DO-186B RTCA DO-207
Software	ED-12B (RTCA DO-178B) Level B
Hardware	DO-254 Level C
Power Requirements	11 – 33 volts DC Typical 2.8 watts @ 14volts, receive Typical 28 watts @ 14 volts, transmit Maximum current 3.2A.
Altitude	55,000 feet
Humidity	95% @ +50°C for 6 hours 85% @ +38°C for 16 hours Tested to Category A in DO-160F
Operating Temperature	-20°C to +70°C
Transmitter Frequency	118.000 MHz to 136.992 MHz 760 channels at 25 kHz spacing
Transmitter Power	6 Watts nominal carrier power
Transmitter Modulation	5K6 A3E
Stuck-mic timeout	35 seconds
Transmitter Duty Cycle	100% transmit is possible (subject to stuck mic timeout)
Receiver Frequency	118.000 MHz to 136.992 MHz 760 channels at 25 kHz spacing
Receiver Sensitivity	< 5uV for 6 dB SINAD
AGC Characteristic	< 6dB variation 5 µV to 100 mV EMF
Maximum VSWR	2.5:1 or lower
Physical Specifications (in the mounting tray)	
Height	Height 48mm (1.9”)
Width	Width 66mm (2.5”)
Length	Length 160mm (6.3”)
Weight	Weight 0.77lbs. (350 g)

Table 108 – SV-COM-X25 Specifications

SV-COM-X83 (TY91L VHF Radio Unit) Technical Specifications

Specification	Characteristics
Compliance	ETSO 2C169a Class C, E, H1, H2, 4, 6 ETSO 2C128 TSO C169a Class C, E, 4, 6, TSO C128a
FCC Identification	VZI00882
Applicable documents	EUROCAE ED-23C EUROCAE ED-67 EUROCAE ED-14F (RTCA DO-160F) RTCA DO-186B RTCA DO-207
Software	ED-12B (RTCA DO-178B) Level B
Hardware	DO-254 Level C
Power Requirements	11 – 33 volts DC Typical 2.8 watts @ 14volts, receive Typical 28 watts @ 14 volts, transmit Maximum current 3.2A.
Altitude	55,000 feet
Humidity	95% @ +50°C for 6 hours 85% @ +38°C for 16 hours Tested to Category A in DO-160F
Operating Temperature	-20°C to +70°C
Transmitter Frequency	118.000 MHz to 136.992 MHz 760 channels at 25 kHz spacing 2280 channels at 8.33 kHz spacing
Transmitter Power	6 Watts nominal carrier power
Transmitter Modulation	5K6 A3E
Stuck-mic timeout	35 seconds
Transmitter Duty Cycle	100% transmit is possible (subject to stuck mic timeout)
Receiver Frequency	118.000 MHz to 136.992 MHz 760 channels at 25 kHz spacing 2280 channels at 8.33 kHz spacing
Receiver Sensitivity	< 5uV for 6 dB SINAD
AGC Characteristic	< 6dB variation 5 µV to 100 mV EMF
Maximum VSWR	2.5:1 or lower
Physical Specifications (in the mounting tray)	
Height	Height 48mm (1.9”)
Width	Width 66mm (2.5”)
Length	Length 160mm (6.3”)
Weight	Weight 0.77lbs. (350 g)

Table 109 – SV-COM-X83 Specifications

SV-COM-T25 and SV-COM-T8 Environmental Qualification Form

Nomenclature T25:	TY91LA VHF radio	
Nomenclature T8	TY91L VHF radio	
Part Number T25: 01857-00-03	ETSO: 2C169a	
Part Number T8: 00882-00-01	ETSO: 2C169a	
Manufacturer:	Trig Avionics Limited	
Address:	Heriot Watt Research Park, Riccarton, Edinburgh, Scotland, EH14 4AP	
Conditions	**DO-160F Section**	**Description of Conducted Tests**
Temperature and Altitude	4.0	Equipment tested to Categories A2, C1
Low temperature ground survival	4.5.1	-55°C
Low temperature short-time operating	4.5.1	-40°C
Low temperature operating	4.5.2	-20°C
High temperature operating	4.5.4	+70°C
High temperature short-time operating	4.5.3	+70°C
High temperature ground survival	4.5.3	+85°C
Loss of Cooling	4.5.5	Cooling air not required (+70°C operating without cooling air)
Altitude	4.6.1	55,000 feet
Decompression	4.6.2	8,000 to 55,000 feet in 15 seconds
Overpressure	4.6.3	-15,000 feet
Temperature Variation	5.0	Equipment tested to Category B
Humidity	6.0	Equipment tested to Category A
Operational Shocks	7.2	Equipment tested to Category B
Crash Safety	7.3	Equipment tested to Category B type 5
Vibration	8.0	Aircraft zone 2; type 3, 4, 5 to category S level M, type 1 (Helicopters) to category U level G
Explosion	9.0	Equipment identified as Category X – no test required
Waterproofness	10.0	Equipment identified as Category X – no test required
Fluids Susceptibility	11.0	Equipment identified as Category X – no test required
Sand and Dust	12.0	Equipment identified as Category X – no test required
Fungus	13.0	Equipment identified as Category X – no test required
Salt Spray	14.0	Equipment identified as Category X – no test required
Magnetic Effect	15.0	Equipment tested to Category Z, safe distance 1 metre
Power Input	16.0	Equipment tested to Category BX
Voltage Spike	17.0	Equipment tested to Category B
Audio frequency conducted susceptibility	18.0	Equipment tested to Category B
Induced signal susceptibility	19.0	Equipment tested to Category AC
Radio frequency susceptibility	20.0	Equipment tested to Category TT
Radio frequency emission	21.0	Equipment tested to Category B
Lightning induced transient susceptibility	22.0	Equipment tested to Category B2H2L2
Lightning direct effects	23.0	Equipment identified as Category X – no test required
Icing	24.0	Equipment identified as Category X – no test required
Electrostatic Discharge	25.0	Equipment identified as Category X – no test required
Fire, Flammability	26.0	Equipment identified as Category C

Table 110 – SV-COM-T8 Environmental Qualification Form

SV-GPS-250 Specifications

Specification	Parameters
Description	WAAS GPS Receiver / Antenna
Compliance	No specific compliance claimed
Source Integrity Level (SIL)	0 (prior to SkyView Software v14.0)
	1 (as of SkyView Software v14.0)
System Design Assurance (SDA)	0 (prior to SkyView Software v14.0)
	1 (as of SkyView Software v14.0)
Update Rate	5 Hz

Specification	Parameters
Receives WAAS Correction Signals (where available)	Yes
Uses all available positioning satellites?	Yes
Time to Acquire Fix (cold start)	60 seconds
Data Interface	TX – Grey/Violet RS-232C @ 38,400 baud
	RX – Grey/Orange RS-232C (not currently implemented)
NMEA data sentences	GGA, GSA, GSV, RMC, VTG
Transponder Compatibility	Dynon Avionics SV-XPNDR-261 (minimum Software SW02.08 for SIL/SDA=1)
System Compatibility	Dynon Avionics SkyView system; minimum Software for SIL/SDA=1: v14.0
	Advanced Flight Systems AF-5000 system minimum Software for SIL/SDA=1: v12.06.01
Maximum Altitude	60,000 feet (18,000 meters)
Maximum Velocity	1000 knots (1852 KPH)
Size	2.19 in. W x 0.75 in. H x 3.44 in. D (55.63mm W x 19.05mm H x 87.38mm D)
Weight	7 oz. (198g)
Power Requirements	8V, 0.1A (Orange Wire +)
	Electrical Ground (Black Wire -)
Operating Temperature	-4°F to +158°F (-20°C to +70°C)
Storage Temperature	-40°F to +140°F (-40°C to +60°C)

Table 111 – SV-GPS-250 Specifications

SV-GPS-2020 Specifications

Specification	Parameters
Description	WAAS GPS Receiver / Antenna
Compliance	Meets 14 CFR § 91.225, 14 CFR § 91.227, and performance requirements of TSO-c166b
Source Integrity Level (SIL)	3
System Design Assurance (SDA)	2
Update Rate	4 Hz
Receives WAAS Correction Signals (where available)	Yes
Uses all available positioning satellites?	No (L1 only)

Specification	Parameters
Time to Acquire Fix (cold start)	60 Seconds
Data Interface	TX – Grey/Violet RS-232C @ 115,200 baud
	RX – Grey/Orange RS-232C (not currently implemented)
NMEA data sentences	GPGGA, GPGLL, GPGSA, GPGSV, GPRMC, GPVTG, GPZDA (additional proprietary data)
Transponder Compatibility	Dynon Avionics SV-XPNDR-261 (minimum Software SW02.08)
System Compatibility	Dynon Avionics SkyView system minimum Software: v14.0
	Advanced Flight Systems AF-5000 system minimum Software: v14.0
Maximum Altitude	60,000 Feet (18,200 Meters)
Maximum Velocity	400 Knots (740.8 KPH)
Size	2.19 in. W x 0.75 in. H x 3.44 in. D (55.63mm W x 19.05mm H x 87.38mm D)
Weight	7 oz. (198g)
Power Requirements	8V, 0.1A (Orange Wire +)
	Electrical Ground (Black Wire -)
Operating Temperature	-4°F to +158°F (-20°C to +70°C)
Storage Temperature	-40°F to +140°F (-40°C to +60°C)

Table 112 – SV-GPS-2020 Specifications

23. Appendix C: Wiring and Electrical Connections

SkyView utilizes standardized network connectors and wire harnesses for equipment-to-equipment connections as well as other connections. Installers should rarely have to build custom wire harnesses. This appendix is included as a reference for those rare times when custom wiring is required.

Improper wiring can result in permanent damage to your instrument and/or the accompanying sensors.

Make all connections to your harness before plugging it into any of the components of the system. Do not make connections while power is applied at any point in the system.

Wire Gauge

Unless otherwise specified, 22 AWG wire is normally sufficient for the power supply and ground lines, but we recommend that you consult a wire sizing chart to determine the size required for the wire routing in your particular aircraft. Ensure that the power lines include a circuit breaker or an appropriately sized fuse for the wire you select.

Smaller gauge wire is sufficient for lines that only carry data.

FAA Advisory Circular AC 43.13-1B is an excellent resource for wire sizing requirements as well as other acceptable methods, techniques, and practices in aircraft inspection and repair.

Grounding

Many of the engine sensors require a connection to a ground on the SV-EMS-220/221. There are many places on an aircraft where you could connect these sensors. However, the ideal location to ground these sensors is to one of the SV-EMS-220/221 ground pins. Connecting the sensor's ground pin directly to the SV-EMS-220/221 minimizes any voltage difference between sensor ground and SV-EMS-220/221 ground.

You can measure the voltage difference between grounds to check if the connection has a minimal voltage drop. Set a multimeter to the DC voltages setting and place one sensor tip on one ground and place the other sensor tip on the other. Measurements close to 0 mV (within 5 mV) are, in most cases, acceptable.

Other grounding recommendations include:

- Ensure that solid, thick electrical connections exist between engine and battery ground.
- Do not paint over surfaces that are ground connection points.

DSUB Crimp Contacts and Tools

DSUB crimp contacts can be obtained from a variety of sources. Dynon Avionics recommends the use of the following Mil Spec types in avionics applications.

Gender	Mil Spec #	Wire AWG
Female/Socket	M39029/63-368	20, 22, 24
Male/Pin	M39029/64-369	

Table 113 – Recommended DSUB Crimp Pins

Use a high quality 4-way indentation contact crimper when working the Mil Spec contacts in Table 113. Paladin Tools P/N 1440 (for 20 to 26 AWG wire) is an example of such a contact crimper tool.

Non-Dynon Avionics Wire Harness Considerations

Each SkyView display includes its own wire harness (SV-HARNESS-D37) for connection to power, serial ports, USB, the external battery, and other connections. We recommend that you use this harness for display installations instead of building your own.

Here are some considerations if you build SkyView network wire harnesses.

Wire Insulation

We recommend that all wire harness wires that are installed in aircraft utilize Tefzel® insulation.

Wire Size

We recommend that all wire harness wires be 22 AWG unless otherwise specified.

Twisted Pairs

SkyView Network cables use twisted data wire pairs for communication between devices. The wire pair should be twisted at 8-10 twists per foot over the entire length of the cable.

Pair #1:

9-Pin Connector Pin #	Wire Color (Dynon Avionics Convention)	Signal Name
1	Green	Data 1A
6	Blue	Data 1B

Pair #2:

9-Pin Connector Pin #	Wire Color (SkyView Convention)	Signal Name
4	White/Blue	Data 2B
8	White/Green	Data 2A

In SkyView Network cables, power distribution pairs are also twisted together.

Pair #3:

9-Pin Connector Pin #	Wire Color (SkyView Convention)	Signal Name
2	Black	Ground 1
7	Red	Power 1

Pair #4:

9-Pin Connector Pin #	Wire Color (SkyView Convention)	Signal Name
3	White/Black	Ground 2
9	White/Red	Power 2

Individual wire, not twisted with any other wire:

9-Pin Connector Pin #	Wire Color (SkyView Convention)	Signal Name
5	Orange	EMS Aux

This wire is currently used only for SV-EMS-220/221 modules, but future modules may also require this signal, so we recommend it be included if you are building your own SkyView Network cables.

Heat Shrink Bundling and Strain Relief

All wires should be bundled together with heat shrink and then strain relieved when exiting the connector shell or hood.

USB Cable (from D37 connector)

The USB cable used in the SV-HARNESS-D37 is a unique part made to Dynon Avionics' specifications for this application and is not sold separately. Attempting to terminate a typical USB cable to a "DSUB" connector causes the USB device to perform marginally (in our experience). For that reason, we recommend that a non-Dynon Avionics version of the SV-HARNESS-D37 to *not include a USB cable*. Instead, purchase USB extension cables to plug into the two USB ports on the back of the SkyView display.

SV-BAT-320 Connection

For warranty replacement, an SV-BAT-320 that is received at Dynon Avionics with a different connector than the factory-installed connector is not be eligible for warranty replacement.

To connect a harness (equivalent to SV-HARNESS-D37) not manufactured by Dynon Avionics to an SV-BAT-320, the following specifications must be followed closely for the SV-BAT-320 to charge and work correctly:

Connector: Molex Micro-Fit P/N 43640-0301 (Digi-Key P/N WM1856-ND)
Pins: Molex Micro-Fit P/N 43031-0007 (Digi-Key P/N WM1841-ND)
Wire: 22 AWG Tefzel, NO MORE THAN 24" LONG; Red w/Yellow stripe: M22759/16-22-24; Black: M22759/16-22-0

Function	SkyView D37 Connector Pin	Wire Color	Molex Connector Pin
Power	2	Red/Yellow	3
Ground	23	Black	1

Table 114 – SV-HARNESS-D37 wiring for SV-BAT-320 Connection Wiring

Do not cut off the connector supplied on the SV-BAT-320; instead, assemble a mating connector as specified above.

OAT Connection

For SkyView pilots that are converting from other Dynon Avionics products, you can use your installed OAT with the addition of the connector below. Both 100433-000 and 100433-001 are compatible. The OAT wiring can be extended as required. If you have 100433-001, ignore the red wire and connect the yellow and blue wires to the connector below. The OAT is non-polarized; either wire can connect to either pin.

Connector: Molex Micro-Fit P/N 43645-0200 (Digi-Key P/N WM1845-ND)
Pins: Molex Micro-Fit P/N 43030-0007 (Digi-Key P/N WM1837-ND)
Wire: 22 AWG Tefzel

SkyView Equipment Electrical Connections

SkyView and SkyView SE displays have six connectors on the back of the unit as illustrated in Figure 218:

- One D37M for connection to the SkyView Display Harness (SV-HARNESS-D37)
- Two D9M SkyView network connectors (SV-NET-xxxx)
- Two Standard 4-pin USB 2.0 jacks for use with USB Series A plugs. Note that there is also a USB port on the SV-HARNESS-D37 for convenience.
- One standard 8-pin RJ45 connector for use with twisted pair category 5 Ethernet cable

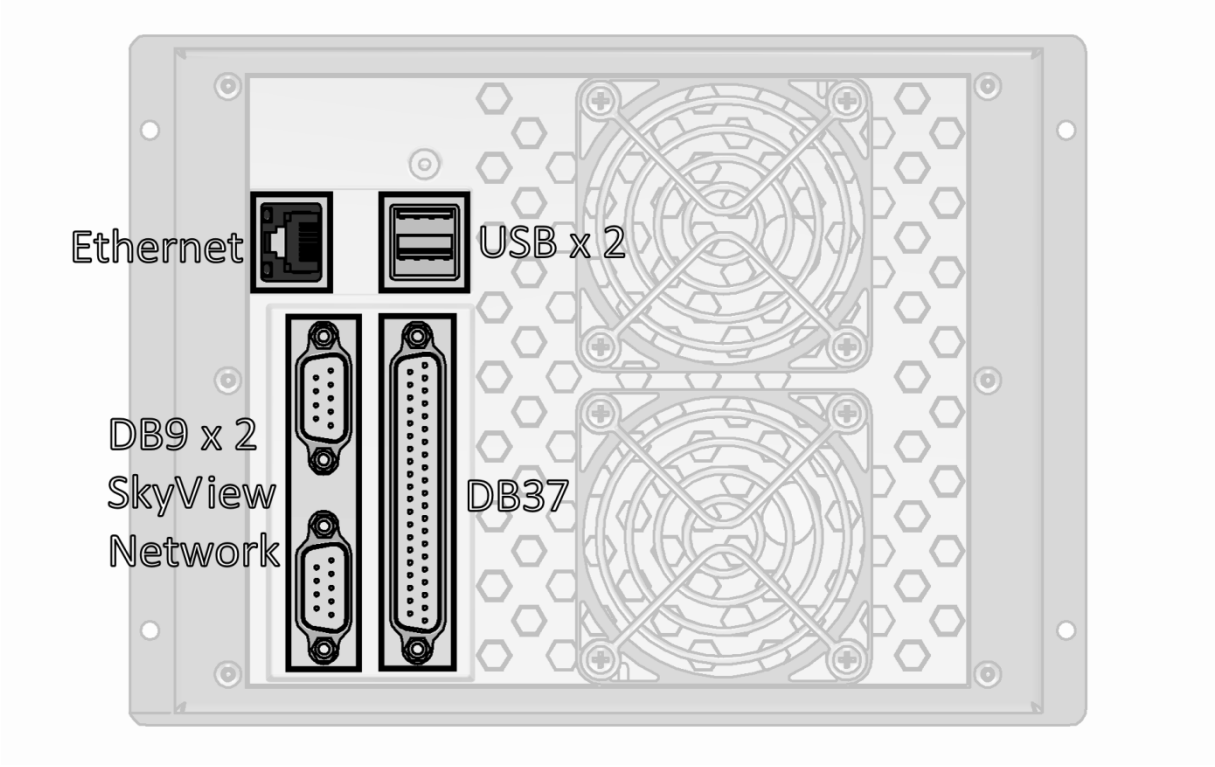

Figure 218 – SkyView Display Connectors

A SkyView ADAHRS module (SV-ADAHRS-200/201) has two connectors as illustrated in Figure 219:

- One D9M SkyView network connector
- One 2-pin OAT sensor connector (only compatible with the SV-OAT-340)

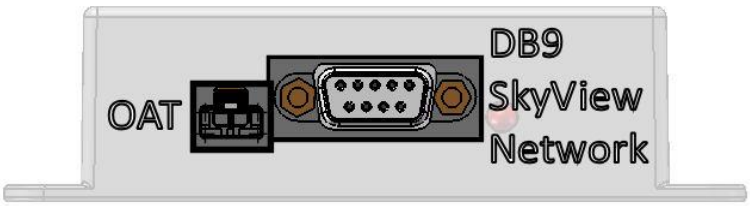

Figure 219 – SV-ADAHRS-200/201 Connectors

The SkyView EMS Module (SV-EMS-220/221) has three connectors as illustrated in Figure 220:

- One D9M SkyView network connector
- One D37M for various transducer connections
- One D25F for thermocouple connections

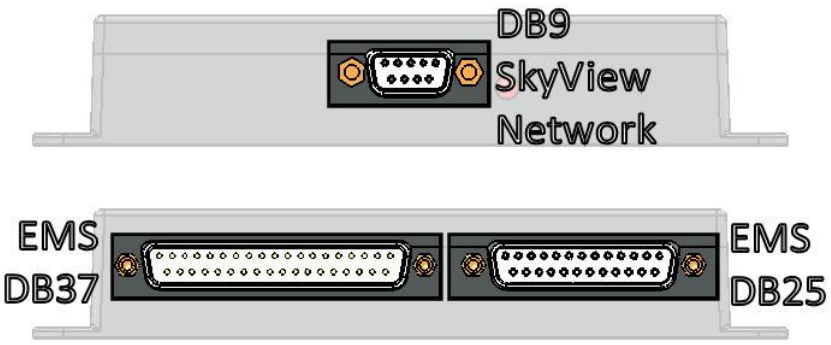

Figure 220 – SV-EMS-220/221 Connectors

The SV-GPS-2020 and SV-GPS-250 GPS receivers include four unterminated wires. These wires may be trimmed or spliced and extended as needed to suit the installation location. Match the colors of these wires with the corresponding colors on the display harness as mentioned in the Serial Data Connection Section of SV-GPS-250/2020 GPS Receiver Installation and Configuration.

The SV-BAT-320 has one connector. *Do not add more wire into the SV-BAT-320 wire bundle.*

Each SkyView servo has seven unterminated wires. Reference the AP Servo Installation, Configuration, and Calibration section for more information.

SkyView Equipment Electrical Connector Pinout Tables

See tables on the follow pages for connector pin function descriptions. Tables for the USB jacks, RJ45 jack, OAT connector, and battery connector are not included.

Servo Pinout (SV-NET-SERVO)

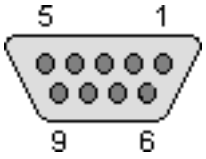

Figure 221 – SV-NET-SERVO D9F Connector Pin Numbering

Dynon Avionics servos (SV32, SV42, SV52, etc.) use a D9M connector (included with the SV-NET-SERVO harness). Figure 221 – SV-NET-SERVO D9F Connector Pin Numbering above shows the pin numbering for the servo's D9M connector, from the rear (pin insertion) view.

SV-NET-SERVO Pin	SV-NET-SERVO Wire Color	Description
1	Green	SkyView Network Data 1A
2	Black	Aircraft Ground

3	Yellow	AP Disengage/Control Wheel Steering (CWS) Button
4	White/Blue	SkyView Network Data 2B
5	N/A	No connection
6	Blue	SkyView Network Data 1B
7	Red	Power (10 to 30 volts DC)
8	White/Green	SkyView Network Data 2A
9	N/A	No connection

Table 115 – SV-NET-SERVO Harness Pinout

SkyView Display D37 Pinout (SV-HARNESS-D37)

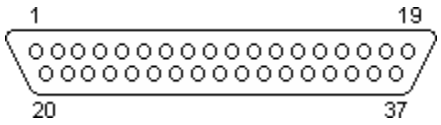

Figure 222 – SkyView Display D37F Connector Pin Numbering

Dynon Avionics SkyView and SkyView SE displays use a D37M connector for the majority of its connections. Figure 222 – SkyView Display D37F Connector Pin Numbering above shows the pin numbering for the mating D37F connector, installed on the cable that plugs into this connector, from the rear (pin insertion) view. The SV-HARNESS-D37 is normally bundled with a SkyView display, though the SkyView display can be purchased without an SV-HARNESS-D37, and the SV-HARNESS-D37 can be purchased separately, for wiring the panel prior to purchasing a SkyView display.

The D9M connectors are SkyView Network connectors which are detailed in SkyView Network Pinout below.

SkyView Display D37M Pin	SV-HARNESS-D37 Wire Color	Description
1	Red	Power Input
2	Red with Yellow stripe	SV-BAT-320 +
3	Brown with Violet stripe	Serial Port 1 RX
4	Brown with Orange stripe	Serial Port 1 TX
5	Yellow with Violet stripe	Serial Port 2 RX
6	Yellow with Orange stripe	Serial Port 2 TX
7	Green with Violet stripe	Serial Port 3 RX
8	Green with Orange stripe	Serial Port 3 TX
9	Blue with Violet stripe	Serial Port 4 RX
10	Blue with Orange stripe	Serial Port 4 TX
11	Gray with Violet stripe	Serial Port 5 RX
12	Gray with Orange stripe	Serial Port 5 TX
13	Brown	Audio Output Left

SkyView Display D37M Pin	SV-HARNESS-D37 Wire Color	Description
14	Orange with Yellow stripe	Contact Input 3
15	Orange with Green stripe	Contact Input 4
16	Red	USB Power
17	Black	USB Ground
18	White	USB-
19	Green	USB+
20	Red	Power Input
21	Black	Ground
22	Black	Ground
23	Black	Ground
24	Black	Ground
25	Violet	Dim Input
26	White	Dim Output
27	Orange with Red stripe	Contact Input 2 (Optional) External GO AROUND Button
28	Orange with Black stripe	Contact Input 1 (Optional) External LEVEL Button
29	Orange	SV-GPS-250/2020 Power Output
30	Black	Audio Ground
31	Gray	Audio Output Right
32	Do Not Connect	Do Not Connect
33	Do Not Connect	Do Not Connect
34	Do Not Connect	Do Not Connect
35	Do Not Connect	Do Not Connect
36	Do Not Connect	Do Not Connect
37	Do Not Connect	Do Not Connect

Table 116 – SkyView Display D37M Pinout with Harness Wire Colors

SkyView D37M Block Diagram

Figure 223 illustrates basic SkyView display D37 electrical connections.

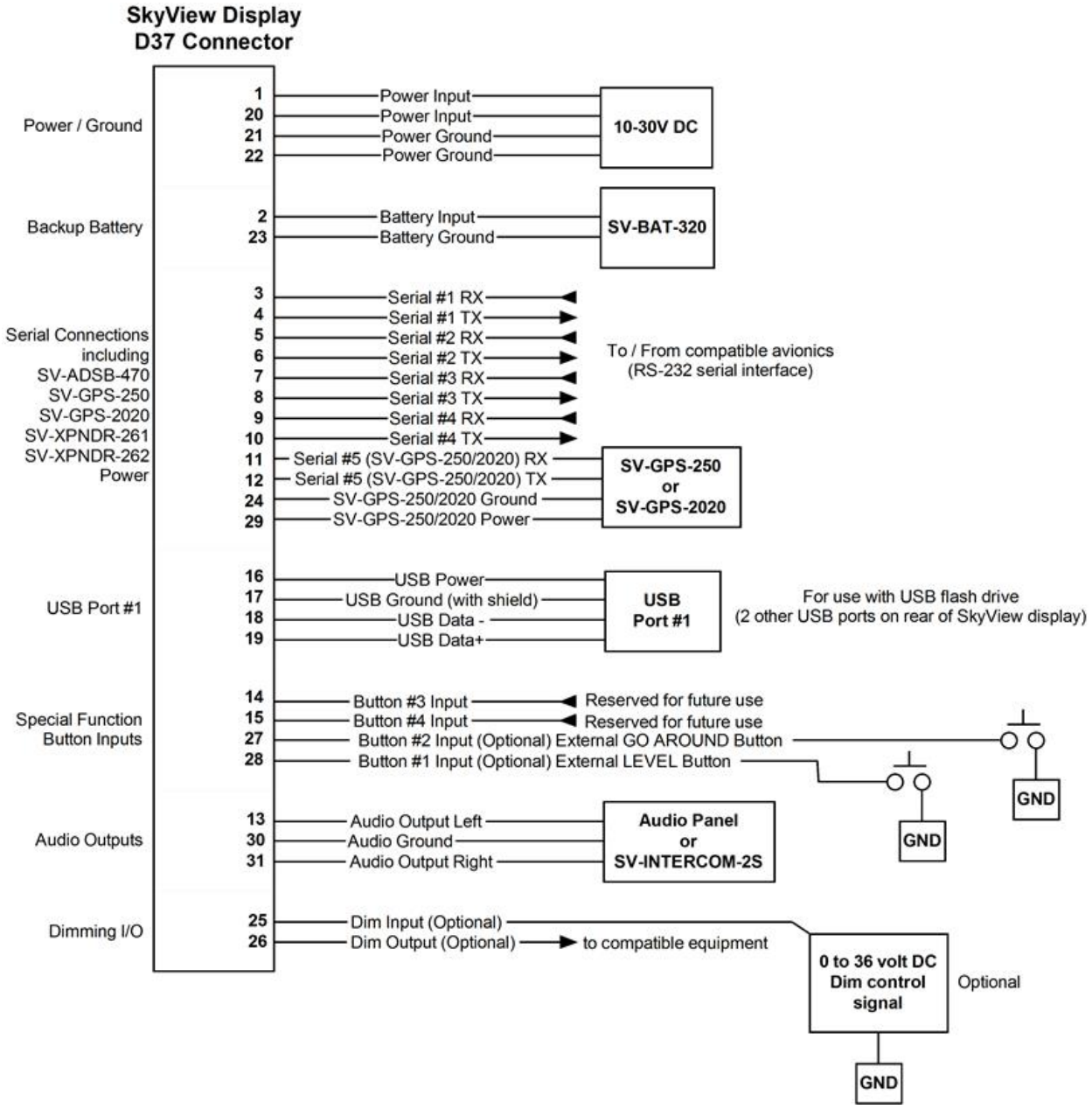

Figure 223 – SkyView Display's D37M Connector Electrical Connections

SkyView Network Pinout (SV-NET-XXXX)

SkyView Network D9M Pin	SkyView Network Cable Wire Color	Description
1	Green	SkyView Network Data 1 A
2	Black	SkyView Network Ground 1
3	White with Black Stripe	SkyView Network Ground 2
4	White with Blue Stripe	SkyView Network Data 2 B
5	Orange	SkyView EMS Auxiliary Voltage
6	Blue	SkyView Network Data 1 B
7	Red	SkyView Network Power 1
8	White with Green stripe	SkyView Network Data 2 A
9	White with Red stripe	SkyView Network Power 2

Table 117 – SkyView Network D9M Pinout and Wire Harness Colors

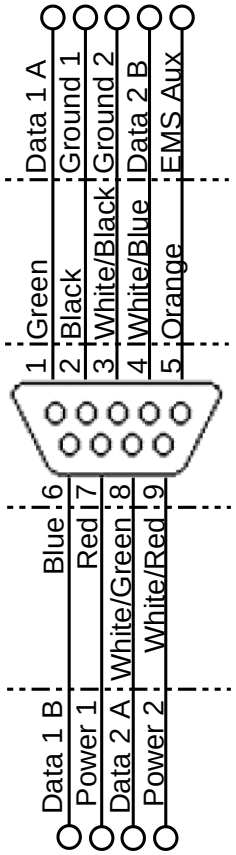

Figure 224 – SkyView Network D9M Pin Insertion View (Rear)

SV-EMS-220/221 Pinouts (EMS Harnesses)

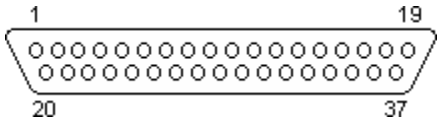

Figure 225 – SV-EMS-220/221 D37F Connector Pin Numbering

The SV-EMS-220/221 uses a D37M connector for connecting most engine sensors. Figure 225 above shows the pin numbering for the mating D37F connector, installed on the cable that plugs into this connector, from the rear (pin insertion) view.

SV-EMS-220 D37M Pin	EMS 37-pin Harness Wire Color	Description
1	Red	Voltmeter 1 (0 to 30 volts DC)
2	Yellow or Unwired	Voltmeter 2 (0 to 30 volts DC)
3	Black	Signal Ground
4	Violet/Blue	General Purpose Input 1
5	Black	Signal Ground
6	White/Yellow	General Purpose Input 11
7	White/Brown	General Purpose Input 12
8	Brown	Enhanced General Purpose Input 4
9	Brown/Blue	General Purpose Input 5
10	Brown/Yellow	General Purpose Input 6
11	Orange	General Purpose Input 7
12	Yellow	General Purpose Input 8
13	Black	Signal Ground
14	Yellow	Fuel Flow Input 1
15	Red	+12 volts DC Auxiliary Power Output
16	Black	Signal Ground
17	Black	Signal Ground
18	White/Red	+5 volts DC Auxiliary Power Output (Limited to 300 mA by internal self-resetting fuse)
19	White/Black	Fuel Flow Input 2
20	Orange/Brown	General Purpose Input 9
21	Orange/Blue	General Purpose Input 10
22	Violet/Yellow	Enhanced General Purpose Input 2
23	Violet/Green	Enhanced General Purpose Input 3
24	Orange/Green	Amps+ Input
25	Orange/Violet	Amps- Input
26	Green/Red	Manifold Pressure Input
27	Open	General Purpose TC Input 1+
28	Open	General Purpose TC Input 1-
29	Yellow/Green	Optional External Alarm Indicator
30	Black	Signal Ground
31	White/Orange	Enhanced General Purpose Input 13

SV-EMS-220 D37M Pin	EMS 37-pin Harness Wire Color	Description
32	White/Green	Standard RPM Left Input
33	White/Blue	Standard RPM Right Input
34	Blue	Low Voltage RPM Left Input
35	Green	Low Voltage RPM Right Input
36	Blue	General Purpose TC Input 2+
37	Green	General Purpose TC Input 2-

Table 118 – SV-EMS-220 D37M Connector

SV-EMS-221 D37 Pin	EMS 37-pin Harness Wire Color	Sensor (with Dynon Avionics part number if applicable)
1	Red	Voltmeter 1 (0 to 30 volts DC)
2	Yellow or Unwired	Voltmeter 2 (0 to 30 volts DC)
3	Black	Signal Ground
4	Violet/Blue	General Purpose Input 1
5	Black	Signal Ground
6	White/Yellow	General Purpose Input 11
7	White/Brown	General Purpose Input 12
8	Brown	Enhanced General Purpose Input 4
9	Brown/Blue	General Purpose Input 5
10	Brown/Yellow	General Purpose Input 6
11	Orange	General Purpose Input 7
12	Yellow	General Purpose Input 8
13	Black	Signal Ground
14	Yellow	Fuel Flow Input 1
15	Red	+12 volts DC Auxiliary Power Output
16	Black	Signal Ground
17	Black	Signal Ground
18	White/Red	+5 volts DC Auxiliary Power Output (Limited to 300 mA by internal self-resetting fuse)
19	White/Black	Fuel Flow Input 2
20	Orange/Brown	General Purpose Input 9
21	Orange/Blue	General Purpose Input 10
22	Violet/Yellow	Enhanced General Purpose Input 2
23	Violet/Green	Enhanced General Purpose Input 3
24	Orange/Green	Amps+ Input
25	Orange/Violet	Amps- Input
26	Green/Red	Manifold Pressure Input
27	Open	RPM Signal to Rotax 912 iS Prop Controller (optional)
28	Open	NOTE: Must be grounded to common ground with Prop Controller
29	Yellow/Green	Optional External Alarm Indicator

SV-EMS-221 D37 Pin	EMS 37-pin Harness Wire Color	Sensor (with Dynon Avionics part number if applicable)
30	Black	Signal Ground
31	White/Orange	Enhanced General Purpose Input 13
32	White/Green	Standard RPM Left Input
33	White/Blue	Standard RPM Right Input
34	Blue	Low Voltage RPM Left Input
35	Green	Low Voltage RPM Right Input
36	Blue or Unwired	CAN High from 912 iS ECU
37	Green or Unwired	CAN Low CAN High from 912 iS ECU

Table 119 – SV-EMS-221 D37M Connector

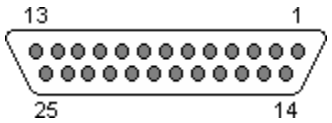

Figure 226 – SV-EMS-220/221 D25M Connector Pin Numbering

The SV-EMS-220/221 uses a D25F connector for connecting most CHT/EGT (thermocouple) sensors. Figure 226 above shows the pin numbering for the mating D25M connector, installed on the cable that plugs into this connector, from the rear (pin insertion) view.

SV-EMS-220/221 D25F Thermocouple Connector Pin	EMS 25-pin Thermocouple Harness Wire Color*	Description
1	Do Not Connect	Do Not Connect
2	Red	CHT6 RED
3	Red	EGT6 RED
4	Red	CHT5 RED
5	Red	EGT5 RED
6	Red	CHT4 RED
7	Red	EGT4 RED
8	Red	CHT3 RED
9	Red	EGT3 RED
10	Red	CHT2 RED
11	Red	EGT2 RED
12	Red	CHT1 RED
13	Red	EGT1 RED
14	White	CHT6 WHITE
15	Yellow	EGT6 YELLOW
16	White	CHT5 WHITE
17	Yellow	EGT5 YELLOW
18	White	CHT4 WHITE
19	Yellow	EGT4 YELLOW

SV-EMS-220/221 D25F Thermocouple Connector Pin	EMS 25-pin Thermocouple Harness Wire Color*	Description
20	White	CHT3 WHITE
21	Yellow	EGT3 YELLOW
22	White	CHT2 WHITE
23	Yellow	EGT2 YELLOW
24	White	CHT1 WHITE
25	Yellow	EGT1 YELLOW

Table 120 – SV-EMS-220/221 D25F Thermocouple Connector

*Note – this is the 6-cylinder CHT/EGT harness, P/N 100399-002.

SV-ARINC-429 Pinout

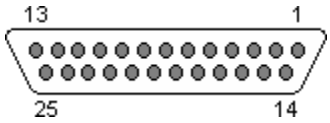

Figure 227 – SV-ARINC-429 D25M Connector Pin Numbering

The SV-ARINC-429 uses a D25F connector for connecting to ARINC-429 devices. Figure 227 above shows the pin numbering for the mating D25M connector, installed on the cable that plugs into this connector, from the rear (pin insertion) view.

Pin	Wire Color	Function	Notes
1	N/A	No Connect	-
2	N/A	No Connect	-
3	(determined by installer)	Serial RX	Aviation Format Only from Connected ARINC-429 GPS
4	N/A	No Connect	-
5	N/A	No Connect	-
6	N/A	No Connect	-
7	N/A	No Connect	-
8	N/A	No Connect	-
9	N/A	No Connect	-
10	(determined by installer)	ARINC 2 RX B	-
11	(determined by installer)	ARINC 1 RX B	-

12	(determined by installer)	ARINC TX B	Pins 12/13 are the same TX signal. Provided for convenience when connecting multiple ARINC receivers.
13	(determined by installer)	ARINC TX B	Pins 12/13 are the same TX signal. Provided for convenience when connecting multiple ARINC receivers.
14	N/A	No Connect	-
15	N/A	No Connect	-
16	N/A	No Connect	-
17	N/A	No Connect	-
18	N/A	No Connect	-
19	N/A	No Connect	-
20	Black	Ground	-
21	N/A	No Connect	-
22	(determined by installer)	ARINC 2 RX A	-
23	(determined by installer)	ARINC 1 RX A	-
24	(determined by installer)	ARINC TX A	Pins 24/25 are the same TX signal. Provided for convenience when connecting multiple ARINC receivers.
25	(determined by installer)	ARINC TX A	Pins 24/25 are the same TX signal. Provided for convenience when connecting multiple ARINC receivers.

Table 121 – SV-ARINC-429 D25F Connector

SV-ADSB-470/472 Pinout (SV-HARNESS-ADSB)

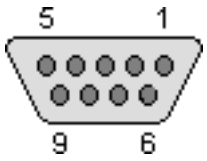

Figure 228 - SV-ADSB-470/472 D9M Connector Pin Numbering

The SV-ADSB-470/472 uses a D9F connector (included with the SV-NET-ADSB harness). Figure 228 above shows pin numbering for the mating D9M connector, installed on the SV-HARNESS-ADSB, from the rear (pin insertion) view.

Note – this connector is NOT a SkyView Network Connector.

Pin	SV-ADS-B 470/472 Wire Color	Function	Notes
1	Red	10-30V DC	Connect to Aircraft Power
2	Orange	SV-ADSB-470/472 Serial RX	Data Input from SkyView
3	Violet	SV-ADSB-470/472 Serial TX	Data Output to SkyView
4	Black	Ground	Connect to Aircraft Ground
5	N/A	No Connect	-
6	N/A	No Connect	-
7	N/A	No Connect	-
8	N/A	No Connect	-
9	N/A	No Connect	-

Table 122 – SV-ADSB-470/472 D9F Pinout

SV-XPNDR-261/262 Pinout (SV-HARNESS-XPNDR)

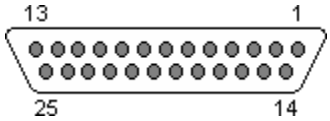

Figure 229 – SV-XPNDR-261/262 D25M Connector Pin Numbering

The SV-XPNDR-261/262 uses a D25F connector (included with the SV-HARNESS-XPNDR harness). Figure 229 above shows pin numbering for the mating D25M connector, installed on the SV-HARNESS-XPNDR, from the rear (pin insertion) view.

SV-XPNDR-261/262 D25 Pin	SV-HARNESS-XPNDR Wire Color	Function	Description
1	White	Loopback 1	Connect to Pin 2
2	White	Loopback 1	Connect to Pin 1
3	White	GPS Serial Input	Aviation Format Only
4	N/A	No Connect	-
5	Orange	SV-XPNDR-261/262 Serial RX	Connect to Pin 4, 6, 8, or 10 on SkyView Display D37 connector
6	N/A	No Connect	-
7	Violet	SV-XPNDR-261/262 Serial TX	Connect to Pin 3, 5, 7, or 9 on SkyView Display D37 connector
8	N/A	No Connect	-
9	N/A	No Connect	-
10	N/A	No Connect	-
11	N/A	No Connect	-
12	White	Loopback 2	Connect to Pin 13
13	White	Loopback 2	Connect to Pin 12
14	Black	Ground	Connect to Aircraft Ground
15	Red	11-33V DC	Connect to Aircraft Power
16	N/A	No Connect	-
17	N/A	External Standby In	Optional: Not Commonly Connected
18	N/A	Mutual Suppression	Optional: Not Commonly Connected
19	Yellow	Squat Switch In	Optional: Not Commonly Connected
20	Green	Ident Switch In	Optional: Not Commonly Connected
21	N/A	No Connect	-
22	N/A	No Connect	-
23	N/A	No Connect	-
24	N/A	No Connect	-
25	N/A	No Connect	-

SV-AP-PANEL Pinout (D15M connector)

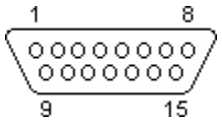

Figure 230 – SV-AP-PANEL D15F Connector Pin Numbering

The SV-AP-PANEL Trim Control Subsystem uses a D15M connector for connecting to trim control buttons, the trim servo(s), and power for the trim servos(s). Figure 230 above shows the pin numbering for the mating D15F connector, installed on the cable that plugs into this connector, from the rear (pin insertion) view.

Pin	Wire Color	Function	Notes
1	N/A	No Connect	-
2	(determined by installer)	No Connect	If trim motor(s) control is not used, do not connect. Power and ground for the SV-AP-PANEL front panel buttons is provided by SkyView Network.
3	Black	PILOT TRIM UP	Motor 1: Pin 7 polarity is + Pin 8 polarity is -
4	(determined by installer)	PILOT TRIM DOWN	Motor 1: Pin 7 polarity is – Pin 8 polarity is +
5	(determined by installer)	COPILOT TRIM UP	Motor 1: Pin 7 polarity is + Pin 8 polarity is -
6	(determined by installer)	COPILOT TRIM DOWN	Motor 1: Pin 7 polarity is – Pin 8 polarity is +
7	(determined by installer)	MOTOR 1 WIRE #1	Pin 3 or Pin 5 grounded: Pin 7 polarity is +, Pin 8 polarity is - (Motor rotates in one direction)
8	(determined by installer)	MOTOR 1 WIRE #2	Pin 4 or Pin 6 grounded: Pin 7 polarity is -, Pin 8 polarity is + (Motor rotates in the other direction)
9	Red	12 Volts @ 4A	If trim motor(s) control is not used, do not connect. Power and ground for SV-AP-PANEL front panel buttons is provided by SkyView Network.
10	(determined by installer)	PILOT TRIM RIGHT	Motor 2: Pin 14 polarity is + Pin 15 polarity is -
11	(determined by installer)	PILOT TRIM LEFT	Motor 2: Pin 14 polarity is - Pin 15 polarity is +

12	(determined by installer)	COPILOT TRIM RIGHT	Motor 2: Pin 14 polarity is + Pin 15 polarity is -
13	(determined by installer)	COPILOT TRIM LEFT	Motor 2: Pin 14 polarity is - Pin 15 polarity is +
14	(determined by installer)	MOTOR 2 WIRE #1	Pin 10 or Pin 12 grounded Pin 14 polarity is +, Pin 15 polarity is - (Motor rotates in one direction)
15	(determined by installer)	MOTOR 2 WIRE #2	Pin 11 or Pin 13 grounded Pin 14 polarity is -, Pin 15 polarity is + (Motor rotates in the other direction)

Table 123 – SV-AP-PANEL D15M Connector

SV-COM-PANEL Pinout (D15M)

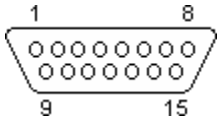

Figure 231 – SV-COM-PANEL D15F Connector Pin Numbering

The SV-COM-PANEL-uses a D15M connector for connecting to the SV-COM-425, SV-COM-T25, or SV-COM-T8 COM radio module. Figure 231 above shows the pin numbering for the mating D15F connector, installed on the cable that plugs into this connector, from the rear (pin insertion) view.

Pin	Wire Color	Function	Notes
1	(determined by installer)	Power In	From SV-COM-425 Pin 7
2	(determined by installer)	Ground In	From SV-COM-425 Pin 13
3	(determined by installer)	Ground Out	Optional - For Grounding Pin 7 (Flip/Flop Switch). Switch may also be grounded locally.
4	(determined by installer)	Panel RX	From SV-COM-425 Pin 6
5	(determined by installer)	PANEL TX	From SV-COM-425 Pin 14
6	(determined by installer)	Enable	From SV-COM-425 Pin 3
7	(determined by installer)	External Flip/Flop Switch (optional)	Push Button Normally Open to Ground (Pin 3 or local ground)
8	N/A	No Connect	-

9	N/A	No Connect	-
10	N/A	No Connect	-
11	N/A	No Connect	-
12	N/A	No Connect	-
13	N/A	No Connect	-
14	N/A	No Connect	-
15	N/A	No Connect	-

Table 124 – SV-COM-PANEL D15M Connector

SV-COM-425 Pinout

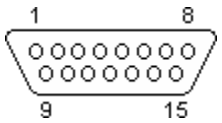

Figure 232 – SV-COM-425 D15F Connector Pin Numbering

The SV-COM-425-uses a D15M connector for connecting to the SV-COM-PANEL. Figure 232 above shows the pin numbering for the mating D15F connector, installed on the cable that plugs into this connector, from the rear (pin insertion) view.

Pin	Wire Color	Function	Notes
1	(determined by installer)	MICROPHONE IN	To SV-COM-2S Pin 25
2	(determined by installer)	MICROPHONE / PTT GROUND	GROUND
3	(determined by installer)	SV-COM-PANEL ENABLE	To SV-COM-PANEL Pin 6
4	(determined by installer)	GROUND OUT	Optional Ground available for use
5	(determined by installer)	PTT IN	To SV-INTERCOM-2S Pin 12 or Push Button Normally Open (PBNO) to Ground (Pins 4, 11, or 15)
6	(determined by installer)	DATA TX TO SV-COM-PANEL	To SV-COM-PANEL Pin 4
7	(determined by installer)	SV-COM-PANEL POWER	To SV-COM-PANEL Pin 1
8	Red	POWER IN	10 30V DC @ 5A

9	(determined by installer)	PHONES GROUND	SV-COM-425 Pin 2 SV-INTERCOM-2S Pin 1 Shielded Cable – shield of Pin 10
10	(determined by installer)	PHONES OUT	SV-INTERCOM-2S Pin 14 Shielded cable – center conductor of Pin 10
11	(determined by installer)	GROUND OUT	Optional Ground available for use
12	Black	GROUND IN	Ground Bus
13	(determined by installer)	SV-COM-PANEL GROUND	To SV-COM-PANEL Pin 2
14	(determined by installer)	DATA RX FROM SV-COM-PANEL	To SV-COM-PANEL Pin 5
15	(determined by installer)	GROUND OUT	Optional Ground available for use

Table 125 – SV-COM-425 D15M Connector

SV-COM-T25/T8 Pinout

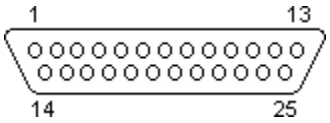

Figure 233 – SV-COM-T25/T8 D25F Connector Pin Numbering

The SV-COM-T25/T8 uses a D25M connector for connecting to the SV-COM-PANEL. Figure 233 above shows the pin numbering for the mating D25F connector, installed on the cable that plugs into this connector, from the rear (pin insertion) view.

Pin	Wire Color	Function	Notes
1	(determined by installer)	PHONES GROUND	Connect to SV-INTERCOM-2S Pin 1 (inside shielded cable)
2	(determined by installer)	PHONES OUT	Connect to SV-INTERCOM-2S Pin 14 (inside shielded cable)
3	N/A	No Connection	-
4	N/A	No Connection	-
5	(determined by installer)	DATA RX FROM SV-COM-PANEL	Connect to SV-COM-PANEL Pin 5
6	(determined by installer)	DATA TX TO SV-COM-PANEL	Connect to SV-COM-PANEL Pin 4
7	N/A	No Connection	-
8	N/A	No Connection	-
9	(determined by installer)	MICROPHONE / PTT GROUND	Connect to SV-INTERCOM-2S Pin 1
10	(determined by installer)	GROUND	No connection
11	N/A	No Connection	-
12	N/A	No Connection	-
13	(determined by installer)	SV-COM-PANEL ENABLE	Connect to SV-COM-PANEL Pin 6
14	N/A	No Connection	-
15	(determined by installer)	PTT IN	Connect to SV-INTERCOM-2S Pin 12 or Push Button Normally Open (PBNO) to Ground (Pin 9)
16	N/A	No Connection	-
17	N/A	No Connection	-
18	(determined by installer)	TRANSMIT INTERLOCK	(Use only when there are two SV-COM-X25/X83s installed.) Connect to other radio's PTT.
19	(determined by installer)	GROUND IN	GROUND
20	N/A	No Connection	-
21	N/A	No Connection	-
22	(determined by installer)	GROUND IN	GROUND
23	(determined by installer)	MICROPHONE IN	Connect to SV-INTERCOM-2S Pin 25 (inside shielded cable)

24	(determined by installer)	POWER IN	10-30V DC @ 5A
25	(determined by installer)	POWER IN	10-30V DC @ 5A

Table 126 – SV-COM-T25/T8 D25M Connector

24. Appendix D: SV-EMS-220/221 Sensor Input Mapping Worksheet

Use this worksheet to record SV-EMS-220/221 sensor input mapping.

IMPORTANT INSTALLATION INFORMATION	
SV-EMS-220/221 S/N	
Installer	
Installation Completion Date	

Pin	Function	Sensor	Name
C37 P1			
C37 P2			
C37 P4			
C37 P6			
C37 P7			
C37 P8			
C37 P9			
C37 P10			
C37 P11			
C37 P12			
C37 P14			
C37 P19			
C37 P20			
C37 P21			
C37 P22			
C37 P23			
C37 P24/25			
C37 P26			
C37 P27/28			
C37 P31			
C37 P32/34			

Pin	Function	Sensor	Name
C37 P33/35			
C37 P36/37			
C25 P2/14			
C25 P3/15			
C25 P4/16			
C25 P5/17			
C25 P6/18			
C25 P7/19			
C25 P8/20			
C25 P9/21			
C25 P10/22			
C25 P11/23			
C25 P12/24			
C25 P13/25			

25.Appendix E: Serial Data Output

~~Any of SkyView's~~ SkyView outputs various types of serial data for users who want real-time aircraft and engine performance data. SkyView can be configured to output serial data through one of five serial ports. SkyView can also be configured to stream serial data over network using TCP or UDP. All numbers are output in decimal except when identified in standard ASCII format (see Data Format sections of this appendix for more information).

Serial Port

Any one of SkyView's *unused* RS232 serial ports can be configured to output ~~various types of~~ serial data ~~via~~.

In multi-display SkyView systems, serial transmission will continue uninterrupted if one SkyView display is still operational. SkyView only transmits from one display's serial ports in a multi-display system. SkyView manages which display is the "actual transmitter" automatically to avoid serial port conflicts. Therefore, for reliable serial reception in multi-display systems, a SkyView serial data output wire must be wired from each display, in parallel, to the external serial device that is being used to capture SkyView's serial data.

To configure a serial port for data output:

1. Navigate to SETUP MENU > SYSTEM SETUP > SERIAL PORT SETUP~~. Technical information on the installation and connection to the serial ports can be found in~~ > SERIAL PORT # SETUP.
2. From SERIAL OUT DEVICE, select the ~~Serial Devices section of the SkyView Installation Guide. To output serial data,~~type of data you ~~must select either~~ want to log:
   - DYNON EMS~~,~~
   - DYNON ADAHRS~~,~~
   - DYNON SYSTEM~~,~~
   - DYNON ADAHRS + SYSTEM~~,~~
   - DYNON ADAHRS + EMS~~, or~~
   - DYNON ADAHRS + SYS + EMS~~,~~
   - NMEA OUT (BASIC~~), or~~)
   - NMEA OUT (FULL)~~ as a Serial Out device~~
3. From SERIAL OUT DEVICE, select a ~~baud rate, and connect the serial port to~~Baud rate.
4. Connect an external serial device such as a PC~~. The serial data can be logged using any standard serial terminal program, a data logger program, or dedicated data logger~~ to SkyView serial port you just configured.

5. Make sure external serial device~~. All numbers are output in decimal except where noted and are standard ASCII. To view the data using a terminal program, that program should be configured to~~ is configured to receive data in the following format:
   - Baud rate: ~~Set baud rate to match the baud rate selected on SkyView's serial port~~ same as SERIAL OUT DEVICE (see Step #3).
   - Data: 8 bit
   - Parity: none
   - Stop: 1 bit
   - Flow control: none

~~Multiple SkyView display systems: SkyView's serial ports are designed in a way that allows serial transmission to continue, uninterrupted, as long as at least one SkyView display is operational. SkyView accomplishes this by transmitting from only one display's serial ports in a multi-display system. SkyView manages which display is the "actual transmitter" automatically to avoid serial port conflicts. However, the display that transmits is not user-selectable. Therefore, for reliable serial reception in multi-display systems, a SkyView serial data output wire must be wired from each display, in parallel, to the external serial device that is being used to capture SkyView's serial data.~~

WiFi and Ethernet

SkyView also provides a network stream (TCP or UDP) of serial data on Port 49155 at 16hz. The data stream includes blocks of ADAHRS, EMS, and System data. Clients can connect to the network stream via SkyView WiFi or ethernet port.

To configure SkyView to stream serial data:

1. Navigate to SETUP MENU > DATA LOG SETUP.
2. From NETWORK SERIAL DATA STREAM, select one of the following:
   - NONE (disabled)
   - TCP
   - UDP
3. Connect an external serial device such as a PC to SkyView's WiFi or ethernet port.
4. Make sure external serial device is configured to listen on Port 49155 at 16hz.

DYNON ADAHRS Serial Data Format

The following section details the format of DYNON ADAHRS serial output data:

Position	Width	Name	Description
1	1	Start Character/Data Type	'!'
2	1	Data Type	1 = ADAHRS data. Other Dynon Avionics formats look similar, and may be interleaved. This bit tells you what kind of data will follow.
3	1	Data Version	Currently 1. This is the version of the data represented below and will change if there is a future version that changes data. Has not changed to date.
4	8	System Time	HHMMSSFF, current Zulu time according to SkyView's internal clock which is synchronized with GPS time if GPS is available. HH is the hour from 00 to 23. MM is the minute from 00 to 59. SS is the second from 00 to 59. HHMMSS are '--------' if GPS time has never been available. FF is the 1/16-second fraction counter from 00 to 15, and may skip digits if baud rate is too low to send data at 16Hz.
12	4	Pitch (deg)	+/- then 000 to 900, pitch up or down from level flight in degrees * 10 (900 = 90°), positive meaning the aircraft is pitched up. XXXX when not available.
16	5	Roll (deg)	+/- then 0000 to 1800, roll left or right from level flight in degrees * 10 (1800 = 180°), positive meaning the aircraft is banked right. XXXXX when not available.
21	3	Magnetic Heading (deg)	000 to 359 in degrees. XXX when not available.
24	4	Indicated Airspeed (knots)	0000 to 9999, indicated airspeed in units of knots * 10 (1234 = 123.4 knots). XXXX when not available.
28	6	Pressure Altitude (ft.)	+/- then 00000 to 99999, altitude in units of feet, at a baro setting of 29.92" Hg, positive meaning altitude is above sea-level. XXXXXX when not available.

Position	Width	Name	Description
34	4	Turn Rate (deg/s)	+/- then 000 to 999, rate of yaw change in degrees/second * 10, positive meaning the aircraft is turning right. XXXX when not available.
38	3	Lateral Accel (g)	+/- then 00 to 99, lateral g's in units of g * 100 (99 = 0.99 g's), positive meaning the aircraft is experiencing leftward lateral acceleration (slip / skid ball is deflected to the right). XXX when not available.
41	3	Vertical Accel(g)	+/- then 00 to 99, vertical g's in units of g * 10 (99 = 9.9 g's), positive meaning the aircraft is experiencing upward vertical acceleration. XXX when not available.
44	2	Angle of Attack (%)	00 to 99, percentage of critical angle of attack. XX when not available.
46	4	Vertical Speed (ft./min)	+/- then 000 to 999, feet/minute / 10 (42 = 420 feet per minute), positive meaning the aircraft is climbing. XXX when not available.
50	3	OAT (deg C)	+/- then 00 to 99. Outside Air Temperature in Degrees C. XXX when not available.
53	4	True Airspeed (knots)	0000 to 9999, true airspeed in units of knots * 10 (1234 = 123.4 knots). XXXX when not available.
57	3	Barometer Setting (inHg)	000 to 400. Baro setting in inHg * 100, offset by 27.50 inHg. Total range is 27.50 inHg to 31.50 inHg. (242 = 29.92 inHg). XXX when not available.
60	6	Density Altitude (ft.)	+/- then 00000 to 99999, altitude in units of feet, positive meaning altitude is above sea-level. XXXXXX when not available.
66	3	Wind Direction (deg)	000 to 359. Wind direction in degrees magnetic. XXX if unknown.
69	2	Wind Speed (knots)	00 to 99. Wind Speed in Knots. XX if unknown.
71	2	Checksum	The 1 byte sum of all 70 preceding bytes. In ascii-hexformat, so 3A = 0x3A
73	2	CR/LF	Carriage Return, Linefeed = 0x0D, 0x0A.

Table 127 – SkyView ADAHRS Serial Data Output Format

As an example, the following is one line of DYNON ADAHRS serial output data:

!1121144703-014+00003310811+01736+003-03+1013-033+110831245+01650023176C

DYNON SYSTEM Serial Data Format

The following section details the format of DYNON SYSTEM serial output data:

Position	Width	Name	Description
1	1	Start Character	'!'
2	1	Data Type	2 = System Info. Other Dynon Avionics formats look similar, and may be interleaved, this bit indicates what kind of data will follow.
3	1	Data Version	Currently 2. This is the version of the data represented below and will change if there is a future version that changes data. Data version changed at SkyView Software v5.1.
4	8	System Time	HHMMSSFF, current Zulu time according to SkyView's internal clock which is synchronized with GPS time if GPS is available. HH is the hour from 00 to 23. MM is the minute from 00 to 59. SS is the second from 00 to 59. HHMMSS are '--------' if GPS time has never been available. FF is the 1/16-second fraction counter from 00 to 15, and may skip digits if baud rate is too low to send data at 16Hz.
12	3	Heading Bug (deg)	000 to 359 in degrees. XXX if heading bug is not displayed.
15	5	Altitude Bug (ft.)	+/- then 0000 to 9999, altitude in units of tens of feet (1234 = 12,340 ft.). XXXXX if altitude bug is not displayed.
20	4	Airspeed Bug (knots)	0000 to 9999, airspeed in units of knots * 10 (1234 = 123.4 knots). XXXX if airspeed bug is not displayed.
24	4	Vertical Speed Bug (ft./min)	+/- then 000 to 999, tens of feet/minute. (123 = 1230 ft./min), positive meaning climb. XXXX if vertical speed bug is not displayed.
28	3	Course (deg)	000 to 359 in degrees.
31	1	CDI Source Type	0-2. 0=GPS, 1=NAV, 2=LOC.
32	1	CDI Source Port	0-5. GPSX, NAVX, or LOCX.
33	2	CDI Scale (NM)	00-50. In tenths of NM, 50 = 5.0 NM. Output 'XX' when not in GPS mode as there is no scale in NAV or LOC
35	3	CDI Deflection (%)	+/- then 00 to 99 percent of deflection, + meaning deflected to right, 'XXX' w/o valid CDI.

Position	Width	Name	Description
38	3	Glideslope (%)	+/- then 00 to 99 percent of deflection, + meaning deflected upward, 'XXX' w/o valid GS.
41	1	AP Engaged	0-7. 0=Off, 1= roll only, 2=pitch only, 3= roll+pitch, 4=yaw, 5=roll+yaw, 6=pitch+yaw, 7=pitch+roll+yaw (yaw doesn't currently exist, but format supports it). Will read 0 all the time if no AP is installed.
42	1	AP Roll Mode	0-4. 0=Heading, 1=Track, 2=NAV, 3=GPS Steering. Always reads zero when AP roll not engaged.
43	1	UNUSED	Reserved for future usage. Always reads 'X'. Parsers should not read this value.
44	1	AP Pitch Mode	0. 0=Altitude. Always reads zero when AP pitch not engaged.
45	1	UNUSED	Reserved for future usage. Always reads 'X'. Parsers should not read this value.
46	3	AP Roll Force	+/- then 00 to 80. Raw force number from servo, + meaning that a force is being exerted in the right-wing-downward direction against the servo. 80 is theoretical maximum before slipping. Always reads zero when AP roll not engaged.
49	5	AP Roll Position (steps)	+/- then 0000 to 9999. Position of servo output shaft relative to that at power-on, in steps, + meaning in the right-wing-downward direction. 800 steps represent a full rotation of the output shaft. Outputs "XXXXX" when not available.
54	1	AP Roll Slip (bool)	0 or 1. 0 = No slipping on this servo. 1 = At least one slip on this servo in the last 3 seconds. Always reads zero when AP roll not engaged.
55	3	AP Pitch Force	+/- then 00 to 80. Raw force number from servo, + meaning that a force is being exerted in the nose-upward direction against the servo. 80 is theoretical maximum before slipping. Always reads zero when AP pitch not engaged.
58	5	AP Pitch Position (steps)	+/- then 0000 to 9999. Position of servo output shaft relative to that at power-on, in steps, + meaning in the nose-upward direction. 800 steps represent a full rotation of the output shaft. Outputs "XXXXX" when not available.

Position	Width	Name	Description
63	1	AP Pitch Slip (bool)	0 or 1. 0 = No slipping on this servo. 1 = At least one slip on this servo in the last 3 seconds. Always reads zero when AP pitch not engaged.
64	3	AP Yaw Force	+/- then 00 to 80. Raw force number from servo, + meaning that a force is being exerted in the rightward direction against the servo. 80 is theoretical maximum before slipping. Always reads zero when AP yaw not engaged.
67	5	AP Yaw Position	+/- then 0000 to 9999. Position of servo output shaft relative to that at power-on, in steps, + meaning in the rightward direction. 800 steps represent a full rotation of the output shaft. Outputs “XXXXX” when not available.
72	1	AP Yaw Slip (bool)	0 or 1. 0 = No slipping on this servo. 1 = At least one slip on this servo in the last 3 seconds. Always reads zero when AP yaw not engaged.
73	1	Transponder Status	0-3. 0=SBY, 1= GND, 2=ON, 3=ALT.
74	1	Transponder Reply (bool)	0 or 1. 0 = No reply in last second, 1 = at least one reply within last second.
75	1	Transponder Identing (bool)	0 or 1. 0 = not IDENT’ing, 1 = IDENT active, as reported by Transponder.
76	4	Transponder Code (octal)	0000-7777
80	10	UNUSED	Reserved for future usage. Always reads ‘XXXXXXXXXX’. Parsers should not read this value.
90	2	Checksum	The 1 byte sum of all 73 preceding bytes. In 25-7sci-hexformat, so 3A = 0x3A
92	2	CR/LF	Carriage Return, Linefeed = 0x0D, 0x0A.

Table 128 – SkyView SYSTEM Serial Data Output Format

Note 1: Yaw axis AP does not exist at this time, but the serial output format supports it.

As an example, the following is one line of DYNON SYSTEM serial output data:

!2221144704359XXXXX1600+010XXX00XXXXXXXX00X0X+00-
99990+00+99990+00XXXXX00104543XXXXXXXXXX3A

DYNON EMS Serial Data Format

The following section details the format of EMS data output to the serial port:

Position	Width	Name	Pin	Description
1	1	Start Character		'!'
2	1	Data Type		3 = EMS Data. Other Dynon Avionics formats look similar, and may be interleaved, this bit indicates what kind of data will follow.
3	1	Data Version		Currently 2. This is the version of the data represented below and will change if there is a future version that changes data. Data version changed at SkyView Software v5.1.
4	8	System Time		HHMMSSFF, current Zulu time according to SkyView's internal clock which is synchronized with GPS time if GPS is available. HH is the hour from 00 to 23. MM is the minute from 00 to 59. SS is the second from 00 to 59. HHMMSS are '-------' if GPS time has never been available. FF is the 1/16-second fraction counter from 00 to 15, and may skip digits if baud rate is too low to send data at 16Hz.
12	3	Oil Pressure (PSI)	Varies (see note 1)	000 to 999 or XXX. Oil pressure in PSI. There must be a pressure sensor named "OIL" for this to work. See note 2.
15	4	Oil Temp (deg C)	Varies (see note 1)	+/- then 000 to 999 or XXX. Oil temperature in C. There must be a temperature sensor named "OIL" for this to work. See note 2.
19	4	RPM L	C37 P32/34	0 to 9999. RPM from Left input.
23	4	RPM R	C37 P33/35	0 to 9999. RPM from Right input.
27	3	Manifold Pressure (inHg)	C37 P26	0 to 600. Manifold Pressure in 0.1 inHg. 299 = 29.9 inHg. There must be a pressure sensor named "MAP" for this to work. See note 2.
30	3	Fuel Flow 1 (gal/hr.)	C37 P14	000 to 999. Fuel flow in 1/10th Gallons Per Hour. 086 = 8.6 GPH. See note 2.
33	3	Fuel Flow 2 (gal/hr.)	C37 P19	000 to 999. Fuel flow in 1/10th Gallons Per Hour. 086 = 8.6 GPH. This is usually return flow. See note 2.

Position	Width	Name	Pin	Description
36	3	Fuel Pressure (PSI)	Varies	000 to 999 or XXX. Fuel pressure in 1/10th PSI. 274 = 27.4 PSI. There must be a pressure sensor named "FUEL" for this to work. See note 2.
39	3	Fuel Level L (gal)	Varies	000 to 999 or XXX. Fuel level in 1/10th Gallons. 128 = 12.8 Gallons. There must be a Level sensor named "LEFT" for this to work. If there is no "LEFT" OR "RIGHT" but there is a "MAIN", this will be MAIN. See note 2.
42	3	Fuel Level R (gal)	Varies	000 to 999 or XXX. Fuel level in 1/10th Gallons. 128 = 12.8 Gallons. There must be a Level sensor named "RIGHT" for this to work. See note 2.
45	3	Fuel Remaining (gal)	Fuel Computer	000 to 999 or XXX. Fuel level in 1/10th Gallons. This is derived from the fuel computer and is based on the fuel on board added set by the user and the decremented by fuel flow. See note 2.
48	3	Volts 1	C37 P1	000 to 360 in 1/10th Volts. 284 = 28.4 volts. See note 2.
51	3	Volts 2	C37 P2	000 to 360 in 1/10th Volts. 284 = 28.4 volts. See note 2.
54	4	Amps	C37 P24/25	+/- then 000 to 999. 1/10th Amps. -083 = -8.3A. See note 2.
58	5	Hobbs Time	Calculated	00000 to 99999. In 1/10 hours. 12345 = 1234.5 hours.
63	5	Tach Time	Calculated	00000 to 99999. In 1/10 hours. 12345 = 1234.5 hours.
68	4	Thermocouple 1 (deg C)	C25 P2/14	+/- then 000 to 999. In degrees C. See note 2.
72	4	Thermocouple 2 (deg C)	C25 P3/15	+/- then 000 to 999. In degrees C. See note 2.
76	4	Thermocouple 3 (deg C)	C25 P4/16	+/- then 000 to 999. In degrees C. See note 2.
80	4	Thermocouple 4 (deg C)	C25 P5/17	+/- then 000 to 999. In degrees C. See note 2.
84	4	Thermocouple 5 (deg C)	C25 P6/18	+/- then 000 to 999. In degrees C. See note 2.
88	4	Thermocouple 6 (deg C)	C25 P7/19	+/- then 000 to 999. In degrees C. See note 2.

Position	Width	Name	Pin	Description
92	4	Thermocouple 7 (deg C)	C25 P8/20	+/- then 000 to 999. In degrees C. See note 2.
96	4	Thermocouple 8 (deg C)	C25 P9/21	+/- then 000 to 999. In degrees C. See note 2.
100	4	Thermocouple 9 (deg C)	C25 P10/22	+/- then 000 to 999. In degrees C. See note 2.
104	4	Thermocouple 10 (deg C)	C25 P11/23	+/- then 000 to 999. In degrees C. See note 2.
108	4	Thermocouple 11 (deg C)	C25 P12/24	+/- then 000 to 999. In degrees C. See note 2.
112	4	Thermocouple 12 (deg C)	C25 P13/25	+/- then 000 to 999. In degrees C. See note 2.
116	4	Thermocouple 13 (deg C)	C37 P27/28	+/- then 000 to 999. In degrees C. See note 2.
120	4	Thermocouple 14 (deg C)	C37 P36/37	+/- then 000 to 999. In degrees C. See note 2.
124	6	GP Input 1	C37 P4	+/- then 0000 to 9999, then units. See notes. Example: +1234C = 123.4 degrees C.
130	6	GP Input 2	C37 P22	+/- then 0000 to 9999, then units. +YYYYZ. See note 3.
136	6	GP Input 3	C37 P23	+/- then 0000 to 9999, then units. +YYYYZ. See note 3.
142	6	GP Input 4	C37 P8	+/- then 0000 to 9999, then units. +YYYYZ. See note 3.
148	6	GP Input 5	C37 P9	+/- then 0000 to 9999, then units. +YYYYZ. See note 3.
154	6	GP Input 6	C37 P10	+/- then 0000 to 9999, then units. +YYYYZ. See note 3.
160	6	GP Input 7	C37 P11	+/- then 0000 to 9999, then units. +YYYYZ. See note 3.
166	6	GP Input 8	C37 P12	+/- then 0000 to 9999, then units. +YYYYZ. See note 3.
172	6	GP Input 9	C37 P20	+/- then 0000 to 9999, then units. +YYYYZ. See note 3.
178	6	GP Input 10	C37 P21	+/- then 0000 to 9999, then units. +YYYYZ. See note 3.

Position	Width	Name	Pin	Description
184	6	GP Input 11	C37 P6	+/- then 0000 to 9999, then units. +YYYYZ. See note 3.
190	6	GP Input 12	C37 P7	+/- then 0000 to 9999, then units. +YYYYZ. See note 3.
196	6	GP Input 13	C37 P31	+/- then 0000 to 9999, then units. +YYYYZ. See note 3.
202	16	Contacts	Not used in SkyView	Z*16 (ZZZZZZZZZZZZZZZZ).
218	3	Percent Power		000 to 199 in percentage of engine reference power. XXX when not determined or invalid.
221	1	EGT Leaning State		The state of EGT leaning. L: Lean of peak, P: Peak, R: Rich of peak. X when not determined or invalid.
222	2	Checksum		The 1 byte sum of all 217 preceding bytes. In 25-11sci-hexformat, so 3A = 0x3A.
224	2	CR/LF		Carriage Return, Linefeed = 0x0D, 0x0A.

Table 129 – SkyView EMS Serial Output Format

Note 1: These sensors can be connected to various pins on the EMS D37M connector. See the SkyView Installation Guide for more information.

Note 2: If the value is invalid, or out of range for the sensor, or the sensor is not configured, or if the sensor is configured but not calibrated, then an 'X' is output for each character in the field instead of a value.

Note 3: Units for each GP input depends on the type of sensor that is connected to the pin. See GP Inputs

Rotax 912 iS Note: When the engine type is 912iS, the following fields in the serial output source their data from the 912 iS' computer instead of conventional sensors: Oil Pressure, Oil Temp, RPM L, RPM R, Manifold Pressure, Fuel Flow 1, Fuel Flow 2 (always 0).

GP Inputs

The output for GP input pins is:

- Each output is in the format +YYYYZ
  - + is the +/- sign for the value
  - YYYY is the value of the signal
  - Z is the units for the signal
    - C if the signal is in temperature, and the units are 1/10th degrees C
      - YYYY is 1/10th degrees C, so 1234 = 123.4 C
      - XXXX if the signal is out of range (red X on ems page)

        - ZZZZ if the input is not configured
    - P if the signal is in pressure, and the units are 1/10 PSI
        - YYYY is 1/10th PSI, so 0123 = 12.3 PSI
        - XXXX if the signal is out of range (red X on ems page)
        - ZZZZ if the input is not configured
    - G if the signal is in volume, and the units are 1/10th Gallons
        - YYYY is 1/10th gallons, so 0183 = 18.3 Gallons
        - XXXX if the signal is out of range or not calibrated (red X on ems page)
        - ZZZZ if the input is not configured
    - V if the signal is in volts (contact input)
        - YYYY is 1/100th volts, so 3852 = 38.52V
        - ZZZZ if the input is not configured
    - T if the signal is position
        - If elevator, rudder, and aileron trim, YYYY is percent travel, so 0047 = 47%
        - If flaps, this is the angle shown on the screen, so 0038 = 38 degrees
        - XXXX if the signal is out of range or not calibrated (red X on ems page)
        - ZZZZ if the input is not configured

As an example, the following is one line of DYNON EMS serial output data:

!3221144705060+093236323632720570571642632630002802801200001300020+197+592+197+592+197+592+197+592+197+592+197+197-0012T+0013T+0001T+0164P+1990P+0928C+0001T+0000G+0263G+0263G+0599P+0928C+0928CZZZZZZZZZZZZZZZZZ045L26

DYNON ADAHRS / SYSTEM / EMS Serial Data Output Combinations

DYNON ADAHRS + SYSTEM Serial Data Format

DYNON ADAHRS+SYSTEM output data alternates between DYNON ADAHRS data and DYNON SYSTEM data. For example, the following is one cycle of DYNON ADAHRS+SYSTEM serial output data where the first line is ADAHRS output and the next line is SYSTEM output:

!1121144703-014+00003310811+01736+003-03+1013-033+110831245+01650023176C

!2221144704359XXXXX1600+010XXX00XXXXXXXX00X0X+00-99990+00+99990+00XXXXX00104543XXXXXXXXXX3A

DYNON ADAHRS + EMS Serial Data Format

DYNON ADAHRS+EMS output data alternates between DYNON ADAHRS data and DYNON EMS data. For example, the following is one cycle of DYNON ADAHRS+EMS output data where the first line is ADAHRS output and that is followed by EMS output:

!1121144703-014+00003310811+01736+003-03+1013-033+110831245+01650023176C

!3221144705060+093236323632720570571642632630002802801200001300020+197+592+197+592+197+592+197+592+197+592+197+197-0012T+0013T+0001T+0164P+1990P+0928C+0001T+0000G+0263G+0263G+0599P+0928C+0928CZZZZZZZZZZZZZZZZZ045L26

DYNON ADAHRS + SYS + EMS Serial Data Format

DYNON ADAHRS+SYS+EMS output data alternates between DYNON ADAHRS data, DYNON SYSTEM data, and DYNON EMS data. For example, the following is one cycle of DYNON ADAHRS+SYS+EMS serial output data where the first line is ADAHRS output, the second is SYSTEM output, and that is followed by EMS output:

!1121144703-014+00003310811+01736+003-03+1013-033+110831245+01650023176C

!2221144704359XXXXX1600+010XXX00XXXXXXXX00X0X+00-99990+00+99990+00XXXXX00104543XXXXXXXXXX3A

!3221144705060+093236323632720570571642632630002802801200001300020+197+592+197+592+197+592+197+592+197+592+197+197-0012T+0013T+0001T+0164P+1990P+0928C+0001T+0000G+0263G+0263G+0599P+0928C+0928CZZZZZZZZZZZZZZZZZ045L26

NMEA OUT Serial Data Formats

NMEA output data consists of industry standard NMEA 0183 Version v4.00 sentences. A reference for Version 4.00 of the standard can be found here:

www.nmea.org/content/nmea_standards/nmea_083_v_400.asp

NMEA OUT (BASIC)

NMEA OUT (BASIC) serial output data consists of GGA, GSA, GSV, RMC, and VTG sentences nominally output at a rate of 1 Hz. The rate is reduced if necessary to transmit the entire set of data at the selected baud rate. This format outputs GPS data for position, speed, altitude, and heading.

For example, the following is one cycle of NMEA OUT (BASIC) serial output data:

```
$GPGGA,214921,3121.6199,N,00000.0000,E,1,04,1.90,3000.0,M,33.9,M,,0000
*62
$GPGSA,A,3,01,02,03,04,00,00,00,00,00,00,00,00,1.00,1.90,1.90*07
$GPGSV,1,1,04,01,20,100,10,02,30,200,56,03,45,300,32,04,62,045,05*7A
$GPRMC,214921,A,3121.6199,N,00000.0000,E,82.07,1.00,300811,0.51,W,A*01
$GPVTG,1.00,T,0.51,M,82.07,N,151.99,K,A*1E
```

NMEA OUT (FULL)

NMEA OUT (FULL) data consists of all of the NMEA OUT (BASIC) sentences followed by RMB, GLL, BWC, XTE, BOD, and APB sentences nominally output at a rate of 1 Hz. The rate is reduced if necessary to transmit the entire set of data at the selected baud rate. This format outputs navigation information derived by SkyView, and is similar to the output that many handheld portable aviation GPS navigators generate.

For example, the following is one cycle of NMEA OUT (FULL) serial output data:

```
$GPGGA,221755,3157.4430,N,00000.0000,E,1,04,1.30,3000.0,M,33.9,M,,0000
*66
$GPGSA,A,3,01,02,03,04,00,00,00,00,00,00,00,00,1.00,1.30,1.40*00
$GPGSV,1,1,04,01,20,100,10,02,30,200,56,03,45,300,32,04,62,045,05*7A
$GPRMC,221755,A,3157.4430,N,00000.0000,E,82.07,1.00,300811,0.49,W,A*06
$GPVTG,1.00,T,0.49,M,82.07,N,151.99,K,A*17
$GPRMB,A,9.99,L,FHAW,TUPJ,1826.7333,N,06432.4998,W,999.9,273.6,005.1,V
,A*41
$GPGLL,3157.4430,N,00000.0000,E,221755,A,A*42
$GPBWC,221755,1826.7333,N,06432.4998,W,273.6,T,274.1,M,999.9,N,TUPJ,A*
67
$GPXTE,A,A,9.99,L,N,A*0A
$GPBOD,299.3,T,299.8,M,TUPJ,FHAW*4F
$GPAPB,A,A,9.99,L,N,V,V,299.8,M,TUPJ,274.1,M,274.1,M,A*4E
```

26. Appendix F: User Data Logs

SkyView continuously stores four retrievable data logs that can be exported for user analysis. These data logs are stored on SkyView's internal flash memory and are exported to a USB flash drive.
The base file name is the same on all four logs. Each element is separated by a dash (-) character:

- DATE – Expressed as year (-) 2-digit month – (2-digit day). Example 2015-01-14
- TAILNUMBER – As entered into SETUP MENU > SYSTEM SETUP > AIRCRAFT INFORMATION > TAIL NUMBER
- SKYVIEWDISPLAYSERIALNUMBER – The serial number of the SkyView display the datalogs were recorded from. Expressed as SNxxxxx (4 digits for SV-D600/SV-D700/SV-SV-D900/SV-D1000, 5 digits for SV-D1000T).
- SOFTWAREVERSION – The Software version on the SkyView display that the datalogs were recorded from, at the time of the datalog export.
- OPTIONAL33CHARACTERS – Optional 33 user-selectable characters that can be added to the datalogs filename, selectable at the time of the datalogs are exported.
- PART_XX – SkyView may save a datalog into multiple files, distinguished by sequential digits, such as ….PART_01, ….PART_02, etc.

User Data Log

Filename format:
DATE-TAILNUMBER-SKYVIEWDISPLAYSERIALNUMBER-SOFTWAREVERSION-OPTIONAL33CHARACTERS-USER-LOG-DATA.csv
Example:
2014-08-07-N123X-SN1492-11.0-CROSS_COUNTRY_LEG1-USER_LOG_DATA.csv
(CROSS_COUNTRY_LEG1 is user-selectable text, up to 33 characters, at time of export.)

The User Data Log contains plain-text tabular data that records the entire state of your SkyView system at a recording rate of your choosing (see below). This includes over 100 items, and includes all ADAHRS (flight instrument) data, Engine parameters, GPS data, Autopilot status, SV-XPNDR-261/262 status, time, and more.

When exported, the data log is a standard CSV (comma separated value) file and can be viewed in spreadsheet programs such as Microsoft Excel once exported from the system. The top row of the CSV file is a header row which documents the format of the file. The headers for each configurable EMS input follow the following format: Name (Units) (where the "Name" field is as it is named in the SENSOR INPUT MAPPING setup menu). Each row beneath that header row contains an individual record – or instantaneous snapshot – of all of the recorded fields**.** Because different SkyView systems have different EMS pin mappings, the order and content of the columns can be dynamic from system to system.

The User Data Log records at the selected Record Rate (see below) any time the SkyView system is powered on.

A sample of what a few columns and rows of data would look like when viewed in a spreadsheet program is shown below. An actual user data log would have over 100 columns of data, and many thousands of rows:

System Time	Pitch (deg)	Roll (deg)	Magnetic Heading (deg)	Indicated Airspeed (knots)	Pressure Altitude (ft.)
1:50:38	0.2	-1.7	134.4	0	4364
1:50:38	0.2	-1.8	134.4	0	4364
1:50:38	0.2	-1.8	134.3	0	4364
1:50:38	0.2	-1.8	134.4	0	4364
1:50:39	0.2	-1.8	134.4	0	4364
1:50:39	0.2	-1.7	134.4	0	4364

Table 130 – User Data Log Excerpt Example

Recent Flight Data Log

Filename format:
2014-08-07-N123X-SKYVIEWDISPLAYSERIALNUMBER-SOFTWAREVERSION-OPTIONAL33CHARACTERS-BLACK_BOX_LOG_DATA.csv
Example:
2014-08-07-N123X-SN1492-11.0-CROSS_COUNTRY_LEG1-BLACK_BOX_LOG_DATA.csv
(CROSS_COUNTRY_LEG1 is user-selectable text, up to 33 characters, at time of export.)

The Recent Flight Data Log records the most recent 15 minutes of flight at a data recording rate of 16 times per second, in the same manner as described above. Its recording rate cannot be changed.

The Recent Flight Data Log records data whenever SkyView believes that it is in flight, which it determines by observing IAS and/or GPS ground speed.

Alert Data Log

Filename format:
DATE-TAILNUMBER-SKYVIEWDISPLAYSERIALNUMBER-SOFTWAREVERSION-OPTIONAL33CHARACTERS-ALERT_DATA.csv
Example:
2014-08-07-N123X-SN1492-11.0-CROSS_COUNTRY_LEG1-ALERT_DATA.csv
(CROSS_COUNTRY_LEG1 is user-selectable text, up to 33 characters, at time of export.)

The Alert Data Log contains plain-text tabular data. A new record is appended each time a SkyView alert of any kind is triggered, including audible alerts and system messages. The Alert Data Log is useful for diagnosing alerts that automatically clear on a brief condition, for

example, oil pressure going into the red zone for a few seconds, then back into green, and automatically clearing.

When exported, the data log is a standard CSV (comma separated value) file and can be viewed in spreadsheet programs such as Microsoft Excel once exported from the system. The top row of the CSV file is a header row which documents the format of the file. Each record consists of supporting data such as time, GPS data, type of alert, the type of alert action, and the description of the alert. The Alert Data Log is allocated 2 MB which may be sufficient to record more than 1500 hours of operation assuming as many as 10 alerts per hour. The Alert Data Log is not affected by the RECORD RATE setting below.

History Data Log

Filename format:
DATE-TAILNUMBER-SKYVIEWDISPLAYSERIALNUMBER-SOFTWAREVERSION-OPTIONAL33CHARACTERS-HISTORY_LOG_DATA.csv
Example:
2014-08-07-N123X-SN1492-11.0-CROSS_COUNTRY_LEG1-HISTORY_LOG_DATA.csv
(CROSS_COUNTRY_LEG1 is user-selectable text, up to 33 characters, at time of export.)

The History Data Log is a cumulative history of files loaded onto the SkyView and other changes mostly used for troubleshooting when requested from Dynon Avionics Technical Support.

Data Logging Recording Options

Record Rate

You can choose the frequency of the data that is recorded from SkyView's various systems for your particular needs. SkyView can record data as frequently as 16 times per second or as infrequently as once every 10 seconds. Recording more frequently trades off the amount of time that the data log covers. At once every 10 seconds, SkyView's User Data Log can store up to about 150 hours of data. At 16 times per second, the log stores about 2 hours of data. When the data log fills up, the oldest data is automatically discarded to make room for new data.

Navigate to SETUP MENU > SYSTEM SETUP > DATA LOG SETUP > RECORD RATE to choose the frequency that data is recorded to the internal User Data Log.

Clearing Data Logs

Navigate to SETUP MENU > SYSTEM SETUP > DATA LOG SETUP > CLEAR ALL DATA to erase the User Data Log, Recent Flight Data Log, and Alert Data Log. Note that this does not clear History Data Log, as this is a log of all significant changes to the configuration of the SkyView system.

Exporting Data Logs

In a dual engine configuration (dual SV-EMS-22x with at least two SkyView displays), data logs for each engine are recorded / exported *only* on the display that is monitoring each engine. Example – in a system where the left display is

configured to monitor the left engine, the data log exported from the left display contains the data log for the left engine (only). It is recommended to use a separate USB flash drive per engine to prevent the possibility of overwriting data logs.

Connect a USB flash drive with at least 100 MB of available storage capacity to your SkyView display. Then, navigate to SETUP MENU > SYSTEM SOFTWARE > EXPORT USER DATA LOGS to export the three data logs to the USB flash drive.

If your SkyView system has not yet flown, or has not flown since the data logs were last cleared, there may not be a Recent Flight Data Log available.

The data logs that are exported are in CSV (comma separated values) format and can be opened by common spreadsheet programs such as Microsoft Excel.

Web-based Engine Analysis

Savvy Analysis – http://www.savvyanalysis.com is a free web-based tool that supports the upload an analysis of the engine information that is contained within SkyView's User Data Logs. Instructions for creating an account and uploading data logs are on the Savvy Analysis website.

Other than technical cooperation to ensure that SkyView datalogs can be correctly parsed as formats are periodically updated, Dynon Avionics has no relationship with Savvy Analysis.

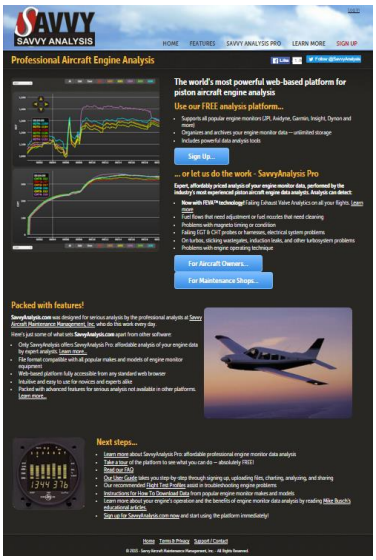

Figure 234
Savvy Analysis Web Page

27. Appendix G: Kavlico Pressure Sensor Part Numbers

The Kavlico pressure sensors sold by Dynon Avionics for oil, fuel, and coolant pressure monitoring can be distinguished only by the Kavlico P/N label or stamp on the sensor. There are two lines of text on the sensors. One line is the date code and the other line is the Kavlico P/N. The P/N lines start with a "P".

How to read Kavlico date codes:

Date code: month, day of month, two-digit year (20xx).
Month: A = January, B = February, C = March, D = April, E = May, F = June, G = July, H = August, J = September, K = October, L = November, M = December

Examples:

B2312 or K1013
P4055-15G or P4055-5025-1

In the example above, B2312 = February 23, 2012, K1213 = October 12, 2013

Dynon Avionics P/N	Usage	PSI	Kavlico P/N		
			Before 2014-07-01	After 2014-07-01	After 2020-04-30
101715-000	Fuel, Coolant	**5**	P4055-5G	P4055-5025	N/A
101690-000	Fuel, Coolant	**15**	P4055-15G	P4055-5025-1	N/A
101691-000	Fuel, Coolant	**30**	P4055-30G	P4055-P5025-2	N/A
101716-000	Fuel, Coolant	**50**	P4055-50G	P4055-P5025-3	N/A
101692-000	Fuel, Coolant	**75**	P4055-75G	P4055-P5025-4	N/A
101693-000	Oil	**150**	P4055-150G	P4055-P5025-6[11]	N/A
103755-000	Fuel, Coolant & Other Fluids	**15**	N/A	N/A	P255-15G-E4A
103713-000	Fuel, Coolant & Other Fluids	**50**	N/A	N/A	P255-50G-E4A
103757-000	Oil, Fuel, Coolant & Other Fluids	**150**	N/A	N/A	P255-150G-E4A

Table 131 – Kavlico Sensor P/Ns

[11] Break in sequence – P4055-5025-5 is 100 PSI sensor, not stocked / sold by Dynon Avionics.

28. Appendix H: Sensor Debug Data

If you have installed one, or dual SV-EMS-220/221s, SkyView can display the “raw data” from all connected and configured engine sensors to assist in troubleshooting engine sensor issues: SETUP MENU > EMS SETUP > SENSOR DEBUG DATA.

Figure 235 – SENSOR DEBUG DATA Page

File Version

This is the sensor file version, with a revision number which should always be unique, as well as the date it was created at Dynon Avionics.

If you see a EMS SFG FILE MISMATCH warning, compare the file version between the two displays and update one display (load a new SFG file) so that both displays have the same File Version.

HB

“HeartBeat” – Increments steadily as data is received from the SV-EMS-220/221(s).

RC

“Resistor Control” – Status of the “pull up resistors” in the SV-EMS-220/221(s); Dynon Avionics internal use only.

Columns:

- **PIN**
    - C37 (Connector, 37-pin) – the 37-pin connector on the SV-EMS-220/221.

  - C25 (Connector, 25-pin) – the 25-pin connector on the SV-EMS-220/221.
  - Px refers to an individual pin on the 37-pin or the 25-pin connector.
  - Px/x refers to a pair of pins used for thermocouples (CHT/EGTs) on the 37-pin or the 25-pin connector.

- **NAME** – The name selected in SENSOR INPUT MAPPING for this sensor / input / pin.
- **SENSOR ID** – The type of sensor selected in SENSOR INPUT MAPPING for this sensor / input / pin.
- **RAW** – Raw number from the Analog to Digital converter; Dynon Avionics internal use only.
- **CAL(V)** – The exact voltage that is present on this pin. The output of many sensors are converted to a voltage in the SV-EMS-220/221 for processing. For example, Dynon Avionics temperature sensors are thermistors, which vary their resistance with changing temperature, and are converted to a voltage internally, before resulting in a display of temperature in ° Fahrenheit or ° Celsius.
- **VALUE** – Output of the (selected) sensor in (converted) units (such as pressure, temperature, etc.) corrected for the measurement unit selected (temperature in ° Fahrenheit, etc.). This is the same number that is displayed in the widget on the EMS page.
  - "nan" is "Not A Number"; the input being received on this pin is invalid for this particular sensor. This is normal when the input is not configured, or the sensor is not connected or defective.

Specialized Function Pins

Pin 14

Primary fuel flow sensor, monitoring fuel flow from the tank to the engine. The RAW value will increment for every pulse received from the fuel flow sensor in the current boot cycle (reset when the SkyView display is powered off).

In Figure 235 above, the displayed RAW value is shown as "5AD" (not 00000000). This value is displayed as a hexadecimal number (Base 16), and increments by 1 for each pulse. Succeeding pulses would change this value to 5AE, then 5AF, then 5B0, etc.

If the engine is on (fuel is flowing from the fuel tank to the engine), the RAW value should be incrementing. If the RAW value is not incrementing, no pulses are being received from the fuel flow sensor.

CAL(V) and VALUE both show the fuel flow rate, corrected for the "K-factor" selected in FUEL FLOW CALIBRATION (pulses per unit per hour) and the unit selected (Gallons or Liters).

Pin 19

Return fuel flow sensor, monitoring fuel flow from the engine back to the tank. The RAW value will increment for every pulse received from the fuel flow sensor in the current boot cycle (reset when the SkyView display is powered off).

Similarly, as Pin 14, in Figure 235 above, the displayed RAW value is shown as “5AD” (not 00000000). This value is displayed as a hexadecimal number (Base 16), and increments by 1 for each pulse. Succeeding pulses would change this value to 5AE, then 5AF, then 5B0, etc.

If the engine is on (fuel is flowing from the engine back to the tank), the RAW value should be incrementing. If the RAW value is not incrementing, no pulses are being received from the fuel flow sensor.

Note that pulses received on Pin 14 are used to SUBTRACT from fuel flow monitored by Pin 14; pulses received on Pin 19 are subtracted from pulses received on Pin 14. For example, if 100 pulses are received on Pin 14, and 50 pulses are received on Pin 19, the net number of pulses used by the SkyView fuel computer to display actual fuel flow will use 50 “net” pulses.

CAL(V) and VALUE both show the fuel flow rate, corrected for the “K-factor” selected in FUEL FLOW CALIBRATION (pulses per unit per hour) and the unit selected (Gallons or Liters).

RPM Left – Pins C37 P32/34

Pin C37 Pin 32 and C37 Pin 34 are different signal levels to the RPM Left Input.

Pin 32 is used for standard (attenuated) signal (typically received from a magneto or other “high level” RPM output) for the RPM Left Input.

Pin 34 is used for low-voltage RPM signal (typically received from an Electronic Control Unit [ECU]).

RPM Right – Pins C37 P33/35

Pin C37 Pin 33 and C37 Pin 35 are different signal levels to the RPM Right Input.

Pin 33 is used for standard (attenuated) signal (typically received from a magneto or other “high level” RPM output) for the RPM Right Input.

Pin 35 is used for low-voltage RPM signal (typically received from an Electronic Control Unit [ECU]).

RPM Left – Pins C37 P32/34 and RPM Right – Pins C37 P33/35

Pin C37 P32/34 and Pin C37 P33/35 display an incrementing number in "RAW". Similar to what’s shown in Figure 235 above for Pin 14, the displayed RAW value is displayed as a hexadecimal number (Base 16), and increments by 1 for each pulse. Similar to the hexadecimal value shown for Pin 14, succeeding RPM pulses would change this value to 5AE, then 5AF, then 5B0, etc.

Thermocouples

Thermocouples (CHTs, EGTs) display as voltage in millivolts. .0084 is 84 millivolts, and which converts to 383 degrees F in a J type thermocouple.

Vref+ is an internal calibration voltage. If it's not near 5.00V in CAL(V) something in the voltage regulator circuitry is not operating correctly and will likely not read correctly.

Vdiff: Value should be near 100. This only affects thermocouples.

0diff: VALUE should be near 0.4. This only affects thermocouples.

ColdJ: Cold junction, which is the temp of the EMS box. VALUE should be the temp of the EMS box in degrees F. This only affects thermocouples.

29. Appendix I: SkyView System Installation Guide Revision History

Revision	Revision Date	Description
A	December, 2009	• Initial release of this document • Document number 101320-000 • SkyView Software v1.0 • 118 pages
B	March, 2010	• Document number changed to 101320-001. • Software changes in SkyView Software v1.5: o Added: A basic moving map displaying aviation data within the United States. This data is overlaid on the look down terrain, and shows airspaces, airports, airport identifiers, and VOR's in relation to the current location of the aircraft. To display this data, you must have an active GPS signal and the USA aviation database installed. There is not currently any user interface to this data, such as a cursor or any menus, and there is no flight planning interface. These functions are planned for a future release of software. Data is limited to the United States for now and is provided by Dynon Avionics free of charge via our website. The USA data is sourced from FAA's published data. Dynon Avionics is working with other data providers to obtain data for regions outside of the United States, and will support this as soon as is possible. There likely will be a fee for non-US data. o Added: All user calibrations and settings are propagated across the entire SkyView system. o Added: Various adjustments now propagate to all SkyView screens in the system. This includes altimeter setting, bugs, screen dimming, message acknowledgment, and other real-time adjustments. o Added: GPS assist mode to ADAHRS algorithm. GPS ground speed is automatically substituted for airspeed when the System detects that the airspeed indication has failed (usually because of an iced, blocked, or otherwise disconnected pitot). When this happens, the PFD annunciates that its attitude indication is in a “GPS Assist” mode. The EFIS display also shows GPS ground speed next to the failed airspeed indication to help the pilot maintain situational awareness. Most importantly, when in GPS Assist mode, the attitude provided by Dynon Avionics PFD continues to be accurate. o Added: GPS ground speed and GPS altitude text on the map screen. o Fixed: Garmin 400/500 series panel-mount GPS data now correctly interpreted. Fixes include lat/long reports and track that was incorrect by degrees of magvar. o Fixed: All pressure sensors correctly display 0 instead of being X'd out when at 0 pressure. o Fixed: Newer Honeywell Rotax-provided oil pressure sensor now works correctly without an external 200-ohm resistor. o Fixed: GPS position must include altitude to be valid for use in SkyView. o Fixed: Grey code converter module now works consistently. • Minor style, grammar, and cross reference changes and corrections • Added servo installation information in various sections. • Clarified SV-ADAHRS-200/201 installation orientation requirements. • Clarified SkyView display basic operation procedures. Most notably, added a screen synchronization section. • SV-D700 / SV-D1000 Installation and Configuration `: o Recommended use of 5A fuse / circuit breaker instead of a 7.5A (Page 4-7). o Added important SV-BAT-320 information (Page 4-7). o Consolidated serial device installation into this section. o Added installation information for external dimming control and audio outputs. o Expanded the Brightness Setup Section. o Added a section regarding installed databases. o Added a section reminding users outside of North America that they will need to install an applicable terrain database file (Page 4-14). o Added a section regarding Aviation Data. • Cautioned against the use of ferrous pneumatic fittings (Page 5-3).

Revision	Revision Date	Description

		• SV-EMS-220 Installation and Configuration Section Updates:
		  ○ Clarified the theory behind and the use of EMS sensor definition and configuration files in SkyView.
		  ○ Added a section regarding SV-EMS-220 wire harnesses.
		  ○ Added example engine sensor and transducer installations.
		  ○ Removed the requirement for a 200 ohm pull down resistor in the Rotax oil pressure sensor installation.
		  ○ Removed the requirement for a 1.21k ohm pull up resistor in the Rotax CHT sensor installation.
		  ○ The SV-EMS-220 is capable of measuring differential fuel flow. All information in the guide has been updated to reflect this.
		  ○ Fixed the fuse call-out on in the Ammeter Shunt Section. Revision A called out a 7.5 Amp fuse. This revision recommends a 1 Amp fuse.
		  ○ Documented other minor sensor installation requirements corrections as required.
		• Clarified SV-GPS-250 installation requirements
		• Expanded Appendix C: Wiring and Electrical Connections
		• 160 pages

C	May, 2010	• Document number changed to 101320-002.
		• Software changes in SkyView Software v2.0:
		  ○ Added: Autopilot, including discrete vertical speed selection using the bug, a change over the D10/D100 series. Also incorporates the alternate roll control mode introduced in D10/D100 series Software version 5.3.
		  ○ Added: Obstacles added to map page (US only). Requires obstacle data file and current configuration file.
		  ○ Improved: More robust failure handling on SkyView network. Should module(s) or screen(s) fails, the remaining available devices will continue working normally with no action or setup steps required. This also means that unlike in the D10/D100 series, SkyView systems have no specific "master" screen that needs special consideration.
		  ○ Added: HSI and related textual info items around it. Requires a compatible serial NAV or GPS. Includes SL30 NAV radio and NMEA/Aviation format GPS units.
		  ○ Added: Wind vector on PFD
		  ○ Added: OEM screen display configuration lockdown with single screen failure mode. Contact Dynon Avionics directly for details.
		  ○ Improved: Fuel flow damped to smooth out readings / eliminate jumpiness.
		• Minor style changes
		• Added information in applicable locations regarding the SV-NET-SERVO wiring kit.
		• Color-coded the connectors in the example SkyView systems figures to indicate gender.
		• Updated the guide to include HSI requirements and other related information.
		• Updated the guide to reflect autopilot functionality, calibration, and testing information. The most notable changes are to the Autopilot Servo Installation, Configuration, and Calibration section.
		• Expanded the Input Function Section under the Serial Port Configuration Section in the SV-D700 / SV-D1000 Installation and Configuration Section.
		• Added an important note on page 5-19 regarding the necessity of configuring airspeed limitations for autopilot servo calibration.
		• Specified that the SV-EMS-220 warning light pin (D37 pin 29) should not be connected in Table 30.
		• The SV-GPS-250 should now be configured as INPUT FUNCTION = POS 1.
		• Clarified servo installation instructions regarding the connection point on the servo arm with the linkage hardware on page 9-6.
		• Updated the AP Disengage/CWS Button Section on page 9-10 to say that the button is required instead of just highly recommended.
		• 178 pages

D	June, 2010	• Document number changed to 101320-003.
		• Software changes in SkyView Software v2.5:
		  ○ Added: Autopilot, including discrete vertical speed selection using the bug, a change over the D10/D100 series. Also incorporates the alternate roll control mode introduced in D10/D100 series Software version 5.3.
		  ○ Added: Obstacles added to map page (US only). Requires obstacle data file and current configuration file.

Revision	Revision Date	Description
		○ Improved: More robust failure handling on SkyView network. Should module(s) or screen(s) fails, the remaining available devices will continue working normally with no action or setup steps required. This also means that unlike in the D10/D100 series, SkyView systems have no specific "master" screen that needs special consideration. ○ Added: HSI and related textual info items around it. Requires a compatible serial NAV or GPS. Includes SL30 NAV radio and NMEA/Aviation format GPS units. ○ Added: Wind vector on PFD ○ Added: OEM screen display configuration lockdown with single screen failure mode. Contact Dynon Avionics directly for details. ○ Improved: Fuel flow damped to smooth out readings / eliminate jumpiness. • Software changes in SkyView Software v2.5.1 released July, 2010 (no documentation changes): ○ Fixed: Small bug in OEM screen display configuration lockdown with single screen failure mode. This release adds no new customer features, and does not need to be installed if you have already installed 2.5. • Added GPS Fix Status information. • Added Fuel Flow pulses/gallon documentation. • Clarified EMS GP input compatibility. • Added information about obstacles and runways to synthetic vision section. • Added information about new autopilot pitch axis settings. • Added information about Optional External Alarm Indicator connection. • Added information about fuel computer settings. • Updated autopilot test procedures with additional warnings and precautions. • 186 pages
E	October, 2010	• Document number changed to 101320-004 • Software changes in SkyView Software v2.6: ○ Added: Requirement for both TX and RX lines from serial devices to be connected to all SkyView Displays to ensure devices remain available in the event of display failure. Will require minimal wiring changes in some existing SkyView systems. ○ Added: Support for SV-XPNDR-261 and SV-XPNDR-262 transponders. ○ Added: Support for SV-ARINC-429 module which adds ARINC-429 transmit and receive capability to SkyView. ○ Added: Traffic display on both map page and PFD Synthetic Vision when receiving data from a compatible device. Current device support includes TIS from SV-XPNDR-26X and TIS from devices that output Garmin format serial data. This currently includes the Garmin GTX330, Zaon XRX, and NavWorx ADS-B receivers. ○ Fixed: Changes made to power handling software to fix most boot and power issues. ○ Improved: Runways can no longer appear above the airplane when on the ground. ○ Fixed: 500 NM zoom level is now actually 500 NM. ○ Fixed: Temperature reading from extra thermocouple input on the SV-EMS-220 DB37 connector now works correctly when enabled. • Reiterated the importance of proper ADAHRS orientation and other installation requirements. • Added note about servo self-lubrication. • Clarified lack of specific boom-mount AOA/Pitot installation instructions. • Added information about serial device and display connection requirements. • Added Software upgrade information for servos being used from D10/D100 with older Software. • Clarified GPS serial connection wire functions and colors. • Added SV-XPNDR-261/262 installation instructions and specifications. • Added SV-ARINC-429 installation instructions and specifications. • Added new requirement to connect TX and RX lines from serial devices to ALL displays in parallel. • Added information about Autopilot servos not needing lubrication. • Clarified lack of boom mount AOA/Pitot mount availability. • 222 pages
F	December, 2010	• Document number changed to 101320-005

Revision	Revision Date	Description
		• Software changes in SkyView Software v2.6 (continued – see Rev E) • Clarified that cable-side transponder TNC connector is not provided by Dynon Avionics. • Added SV-BAT-320 connection information for customers making their own harnesses. • Added OAT connection information for customers making their own harnesses. • Removed 30K resistor requirement for Rotax trigger coil RPM pickup. • Clarified SV-GPS-250 connections when multiple displays and/or SV-GPS-250 modules are involved. • Added pinout table for Dynon Avionics Capacitance to Voltage Converter for Van's Capacitive Plates. • 224 pages
G	March, 2011	• Document number changed to 101320-006 • Software changes in SkyView Software v3.0: o Added: Serial TIS out to support traffic display on 3rd party devices. o Improved: Direct-to now uses industry-standard icon instead of "DTO". o Improved: SL70 serial out now baud rate selectable. o Improved: Much more information displayed when available for airports and other aviation features. o Added: Support for explicit Synthetic Vision licenses. o Improved: HSI size increased for improved legibility. o Added: G meter option to PFD page. o Added: Jeppesen aviation/obstacle data support. o Added: Support for Kavlico 3PSI fuel pressure sensor (via sensor file update). o Added: OEM dimmer support. o Added: Support for database sharing via Ethernet in multi-display systems. o Improved/Fixed: SkyView bootup sequence changed to address reports of displays that do not boot properly, particularly when a SV-BAT-320 is connected. o Improved: SkyView displays will now stay on indefinitely if external power is lost in flight if a battery is connected. o Added/Improved: Navigation Mapping Software greatly improved. First version that requires a license to use (through additional purchase) Trial version with 30 flight hour free trial SkyView systems. o Added: Support for UMA differential fuel pressure sensor to support Rotax 914 engines (via sensor file update). o Improved: Cross-wind component always updates, even if base wind direction and magnitude is not being updated due to aircraft dynamics. o Fixed: Amps readings of -0 no longer displays negative. • Added connector labels to SkyView Network Module and Display Diagrams. • Fixed orientation of SkyView connectors on diagrams. • Clarified acceptable SV-ADAHRS-200/201 orientation. • Added additional Garmin 430 and SL30 configuration information. • Fixed link to AOA information on Dynon Avionics web site. • Added LED status troubleshooting information for SkyView modules. • Added product registration information. • Updated Garmin 480 connection details. • Added warnings about modifying products and introduction of foreign debris. • Described improved loss of external power with SV-BAT-320 connected behavior. • Added G-meter setup information. • Added recommended Ethernet connection information for multiple display SkyView systems. • Clarified GRT Hall Effect Amps sensor support. • Added information about reconnecting repaired SkyView Network components to a system after repair. • Added Synthetic Vision License and Purchase Information. • Added SV-MAP-270 License and Purchase Information. • Updated information about obtaining and managing aviation / obstacle databases, including Jeppesen data support. • 232 pages
H	May, 2011	• Document number changed to 101320-007 • Software changes in SkyView Software v3.1: o Added: Flight Planning with multiple leg support. o Added: Option to disable extreme pitch warning indication chevrons.

Revision	Revision Date	Description
		○ Added: EMS serial output stream capability. ○ Added: Option to disable flight path marker. ○ Added: Option to disable extreme pitch warning indication chevrons. ○ Added: Software version now listed in LOCAL SCREEN SETUP > SCREEN HARDWARE INFORMATION. ○ Improved: Flap widget display on 20% EMS page. ○ Improved: PFD, EMS, MAP page select buttons are now PFD PG, ENGN PG, MAP PG. ○ Fixed: Incomplete backup functionality removed from setup menu. ○ Fixed: Erratic G-meter readings at higher G loads. • Software changes in SkyView Software v3.1.1 released July, 2011 (no documentation changes): ○ Fixed: Vulnerability that can cause a SkyView display to fail on power-up in rare circumstances. • Removed Create System Backup description. • Added description of EMS serial data. • Changed Screen Hardware to Display Hardware. • Add flight path marker and extreme pitch warning menu items. • Clarified SV-GPS-250 connectivity. • Clarified that Ethernet is designed to be connected permanently. • 239 pages
I	September, 2011	• Document number changed to 101320-008 • Software changes in SkyView Software v3.2: ○ Added: Map panning mode - allows ability to move around the map with the map pointer. Map pointer can be navigated "direct-to", and map pointer locations can be added to flight plans. ○ Added: Support for external (typically certified) serial altitude encoder to provide pressure altitude to the SV-XPNDR-26X in lieu of SkyView's own pressure altitude. ○ Added: Support for state/country boundaries via download from Dynon Avionics website. Units that ship with 3.2 or later have this database pre-installed. ○ Added: OAT adjustment capability. ○ Added: EMS serial output stream capability. ○ Added: NMEA serial output. ○ Added: DYNON ADAHRS and SYSTEM serial data output formats. ○ Added: VP-X support. Requires VP-X hardware and license from Dynon Avionics. ○ Improved: Tachometer default text is now TACH/RPM instead of RPM/RPM. ○ Improved: VOR directional information on MAP INFO pages now expressed in terms of radials instead of bearing. ○ Improved: License UI improved to reduce confusion. ○ Improved: Bug/baro windows highlight in cyan when adjusted. ○ Improved: Bug/baro windows are outlined in white when knob is set to control them. ○ Improved: More display dimming steps available for finer control of display brightness. ○ Improved: Knob scrolling acceleration removed in menus and when choosing characters. ○ Improved: Font sizes increased and screen layouts adjusted to improve legibility, particularly on the SV-D700 display. ○ Changed: XPNDR menu no longer exits all the way to the main menu after a CODE is entered. Instead goes back to the XPNDR menu. ○ Fixed: Power switching bug causing display flicker at roughly 10.3V input voltage when SV-BAT-250 is connected. ○ Fixed: Removed phantom course pointers after GPS "direct-to" cancelled. ○ Fixed: SV-BAT-250 charge indication in setup menu. ○ Fixed: Serial port problems that was created between 3.1 and 3.1.1. Primarily affected serial ports 1 and 2 ability to communicate properly with external devices on some displays. • Software changes in SkyView Software v3.2.1 released October, 2011 (no documentation changes):

Revision	Revision Date	Description
		○ Hardware Support Change Only: Maintenance release to support internal hardware change. There are no bug fixes, feature additions, or documentation changes for this release from 3.2.0. • Added angle of attack menu item. • Added OAT sensor adjustment setting information. • Added Vertical Power VP-X License information and interfacing information. • Clarified serial port connections for multi-display SkyView systems in Appendix E. • Added information about which modules and devices the SV-BAT-320 can provide power to in the event of power failure. • Added EI FT-60 fuel flow sensor orientation information. • Added a note about the importance of external devices sharing ground with SkyView for proper operation. • Added Amps shunt fuse diagram. • Added SV-XPNDR-261/262 power wire size recommendation. • Added permission to print manual. • Added information about taking screenshots for troubleshooting purposes. • Added information about re-doing ADAHRS-based calibrations if an additional ADAHRS is installed after calibrations have been done. • Consolidated all information about ADAHRS calibrations into the ADAHRS installation section. • Added ADAHRS, SYSTEM, and NMEA Serial output information to Serial Data Output Appendix. • 262 pages
J	November, 2011	• Document number changed to 101320-009 • Software changes in SkyView Software v3.2.2: ○ Added: Garmin GTN series ARINC support. ○ Improved: G-meter behavior above 1.5G. ○ Improved: Garmin 430/530 series ARINC support. ○ Fixed: VP-X flaps controls backwards. ○ Fixed: VP-X vulnerability that can cause a trim or flaps runaway condition after a momentary press of the flaps or trim UP/DOWN/LEFT/RIGHT buttons. • Added Garmin GTN connection information. • Added Garmin serial port setting for Garmin 430/530 ARINC-429 based connections. • 264 pages
K	March, 2012	• Document number changed to 101320-010 • Software changes in SkyView Software 3.3: ○ Added: Audio output/alerts. See the technical advisory page for information about an audio output hardware issue that affects the audio quality of some SkyView display units. ○ Added: Zero Pressure Airspeed Calibration routine for best possible accuracy at very low indicated airspeeds. ○ Added: Alerts for various required calibrations (mag heading, AOA, etc.), especially when a new seconds ADAHRS is added or replaced. ○ Added: Rotax 912 special oil temp and tachometer behaviors (variable redlines based on oil temperature). ○ Added: Robust User Waypoints feature within SkyView. ○ Added: Ability to inhibit engine alerts after boot but before engine is started. ○ Added: Support for Visual Reporting Points in navigation mapping software. ○ Added: Altitude Alerter. ○ Added: Support for more configurable info items on the map page. ○ Improved: Alert / messaging infrastructure and UI completely refreshed. ○ Improved: Airspeed tape made wider better color marking visibility. ○ Improved: Map / navigation mapping software user interface. ○ Fixed: Map now supports 7-character airport identifiers that exist in some databases. ○ Fixed: Bug that could cause some EGTs or CHTs to not alarm properly after complex configuration changes. ○ Fixed: Reversed runways in PocketFMS data. • Software changes in SkyView Software v3.3.1 released April 4, 2012 (no documentation changes): ○ No feature changes: Minor bug fix for OEM-specific features.

Revision	Revision Date	Description

		• Software changes in SkyView Software v3.3.2 released April 12, 2012 (no documentation changes):
		  ○ Fixed: Critical bug that could result in a frozen display when Skyview-based navigation (either direct-to or flight plan based) is being used.
		  ○ Fixed: Erroneous TIS traffic dropout annunciation.
		• Added information about equipping for IFR.
		• Clarified that Jeppesen data must be transferred to USB flash drive via the Jeppesen JSUM program.
		• Added PocketFMS information.
		• Clarified Honeywell oil pressure sensor connection information (Rotax).
		• Added recommendation to ensure master contactor/relay is protected by a diode.
		• Clarified fuel flow sensor connections.
		• Added UMA differential pressure sensor information.
		• Added SV-BAT-320 test to initial installation procedures.
		• Changed EMS wire harness tables to indicate pin 2 may not have a wire in it (all recent Dynon Avionics harnesses).
		• Clarified future use of connected TSO'd GPS to transponder for ADS-B 2020 mandate compliance.
		• Clarified that a broken shear screw may be indicative of a more systemic problem that needs to be resolved.
		• Added serial port test to ensure that ports are configured correctly on all displays.
		• Better explanation of cases when fuel tank / sensor geometry prohibits display of all fuel in tanks.
		• Added Kavlico Fuel, Oil, and Coolant Pressure sensor information.
		• Clarified external dimming input.
		• Added Rotax 912 special oil temp / tachometer behavior.
		• Added altitude alerter setup information.
		• Added EMS 5/12V output current limitations information.
		• Added 3rd party two wire oil temperature sensor connection instructions.
		• Added procedure for performing pitot/static checks.
		• Updated map setup instructions as former setup items are not user-accessible via normal SkyView UI.
		• Clarified settings changes necessary to support capacitive fuel quantity sensors.
		• Added audio output connection instructions.
		• Updated CWS Broken Line Detect instructions to reflect that the feature is now available.
		• 276 pages

L	August, 2012	• Document number changed to 101320-011
		• Software changes in SkyView Software 4.0:
		  ○ Added: SkyView Network redundancy monitoring, alerting, and automatic failover.
		  ○ Added: Support for SV-EMS-221 for Rotax 912 iS support.
		  ○ Added: Support for robust base map data, including the depiction of roads, cities, rivers, and railroads, and political boundaries.
		  ○ Added: SkyView can detect and alert the pilot when excessive ADAHRS vibration is present. Fixing excessive vibration can improve poor AP perf.
		  ○ Added: SkyView alerts the pilot when multiple ADAHRS' flight instruments disagree with each other. The pilot can then visually compare them side-by-side and disable the incorrect ADAHRS.
		  ○ Added: Many more airspace types supported, with enhanced airspace border line drawing and shading.
		  ○ Added: Named support for the generic "GARMIN TIS TRAFFIC" devices in the serial port setup.
		  ○ Improved: NEEDS MAG CAL alert changed to NEEDS COMPASS CAL for clarity.
		  ○ Improved: MAP button changed to MAP MENU for clarity.
		  ○ Fixed: EMS > LEAN option removed for Rotax engines, which do not have mixture control.
		  ○ Fixed: VP-X based voltmeter now has a settable range.
		  ○ Fixed: Autopilot holding at slight offsets of tens of feet in altitude hold mode.
		• Software changes in SkyView Software 4.0.1 released September, 2012 (no documentation changes):

Revision	Revision Date	Description
		○ No feature changes: Support for minor change in SkyView hardware in displays shipped in 9/2012. Customers that have 4.0 do not need to install 4.0.1 unless advised by Dynon Avionics Technical Support. • Clarified obtaining HEX CODEs for Mode-S operation. • Added SV-NET-HUB drawing with dimensions. • Location of pulses/gallon setting changed in setup menu. • Added dual SV-GPS-250 + dual display example connection diagram. • Clarified VP-X flaps and trim calibration procedures. • Added Dynon Avionics Capacitance to Voltage Converter current draw information for power planning. • Clarified that audio output from ALL SkyView displays must be connected to audio panels/intercom for proper audio operation. • Clarified % power only available on Lycoming / Continental engines. • Added crush washer spec for 100409-001 oil temp sensor. • Updated pitot/static test instructions. • Added metric units to most dimensions and weights. • Explained presence of unused 1.21K resistor in SV-XPNDR-261/262 connector kit. • Clarified fuel flow sensor placement recommendations. • Changed max SkyView displays supported to three. • Added instructions for using already-installed Dynon Avionics D10/D100 Series OAT Sensors with SkyView. • Added Rotax 912 iS information. • Added SkyView Network redundancy information to SkyView Network and Troubleshooting sections. • Expanded ADAHRS Source Selection section with new cross-checking features. • 292 pages
M	December, 2012	• Document number changed to 101320-012 • Software changes in SkyView Software 5.0: ○ New: Graphical display of NEXRAD Weather on map page via SV-ADSB-470 based FIS-B downlink. ○ New: METAR/TAF textual weather on airport INFO pages and on the NRST WX page via SV-ADSB-470 based FIS-B downlink. ○ New: Reversionary mode for multiple display SkyView systems. ○ New: Automatic ALT/GND SV-XPNDR-261/262 mode changes via air data / GPS information. Only available with SV-XPNDR-261/262 software version 2.02 or above. ○ New: Robust page control for individual displays, allowing customers to disallow the clearing of PFD/EMS/MAP pages through settings. ○ New: SCREEN > SWAP button for two displays that swaps entire contents of displays. ○ New: Display of graphical TFRs weather via SV-ADSB-470 based FIS-B downlink. TFR Note 1: TFRs that surround sporting events/stadiums are not currently depicted in SkyView 5.0. Sports stadium TFRs are transmitted without active times, and thus would be presented as active at all times, even though the restrictions are in effect only during sporting events. Because of this, they add significant clutter if presented as regular TFRs. SkyView 5.1, which is scheduled for a January 2013 release, will add support for these TFRs with a unique depiction and a separate declutter option, but there will still not be an indication of their active or inactive status. TFR Note 2: Due to limitations in the way that the FAA currently transmits TFR information over ADS-B, many TFRs, including but not limited to such as VIP movement / Security / Hazard / Presidential movement, cannot be depicted by SkyView. Therefore, pilots should not rely on SkyView TFR depiction as an authoritative source of TFRs. Make sure to use official briefing data sources for complete TFR information. ○ Improved: Airspace colors for class B, D, TMA, MTMA, CTR, Alert, and Warning airspace types. ○ Improved: Support for CTR and CTA airspaces which were previously displayed by class., and Display of TIZ and TIA airspaces have been added. These require downloading a new database from either Jeppesen or PocketFMS ○ Improved: Fuel computer user interface under for ENGINE > FUEL improved. ○ Improved: Fuel computer updates now sync between multiple displays.

Revision	Revision Date	Description
		○ Improved: Fuel quantity gauges can now use arc, bar, and contact widget styles ○ Improved: Engine gauge widgets can now be set to the lower of zero or the lowest possible value defined via the sensor definition file (.sfg). ○ Improved: All aviation databases now trigger an OUT OF DATA notice after their expiration. ○ Fixed: Basemaps available as of 5.0 release now sync over Ethernet connection when loaded onto SkyView systems with 5.0 or later SkyView software. ○ Fixed: Extremely short flight plan legs no longer cause automatic waypoint sequencing to stop. ○ Fixed: User waypoint altitudes now displayed on their INFO pages. • Updated SV-XPNDR-261/262 Installation, Configuration, and Testing section, as well as relevant appendix data, to reflect updated ADS-B Out capability, improved squat-switchless air/ground detection and automatic mode switching. • Added basic explanation of EMS voltmeter inputs. • Clarified the boom mount does not incorporate drainage features. • Added link to FAA AIM for further ADS-B and TIS system information. • Clarified SV-XPNDR-261/262 serial port wiring. • Added engine alert inhibit information. • Added voltage measurement capability and ultimate limit for type "C" EMS inputs. • Improved standby network error troubleshooting explanation. • Updated recommendation to have servos powered whenever SkyView is powered on. • Added description of take-off position marking for trim calibrations. • Added SV-ADSB-470 installation information. • Documented move of INHIBIT ENGINE ALERTS AT BOOT option to Engine Information menu. • Updated return to service appendix. • 308 pages
N	January, 2013	• Document number changed to 101320-013 • Software changes in SkyView Software 5.1: ○ New: User data logging. One user-configurable data log can record virtually all aspects of SkyView's state at rates between 0.1Hz and 16Hz. A second non-configurable "recent flight" data log records the last 15 minutes of flight data at 16 Hz. Both are CSV (comma separated value) files that are exported to USB. Exported files are compatible with the free SavvyAnalysis.com engine analysis tools ○ Improved: Stadium TFRs, which do not have FAA-reported active times, are now a separately de-clutterable item under MAP MENU > MAP ITEMS. These airspaces are graphically depicted in orange on the map page. ○ Updated: EMS and SYSTEM serial outputs formats changed. Third party products that use the older formats will need to be updated before they will be compatible with the 5.1 formats. Vertical Power VP-200 system is not yet compatible with this update (as of Feb. 2013). ○ Fixed: Map info items no longer show erroneous data when aircraft is stationary. ○ Fixed: Compass calibration now works reliably when more than one ADAHRS installed. Previously, some customers have experienced trouble getting both ADAHRS properly calibrated, leading to cross-check errors. ○ Fixed: Map page shows map picture upon initial power up, even if GPS lock has not yet been achieved. • Updated Serial Data Output Format Specifications. SYSTEM and EMS formats have changed for Software v5.1. • Documented new internal data logging feature (Appendix F) • Added a note to reinforce that the servo shear screw should NEVER be removed or adjusted in the normal process of installing an autopilot servo. • 312 pages
O	June, 2013	• Document number changed to 101320-014 • Software changes in SkyView Software v6.0:

Revision	Revision Date	Description
		○ New: Simplified Autopilot Controls - great for VFR pilots that are looking to reduce the complexity of the Autopilot and cruise in comfort without a steep learning curve. With these controls, there are fundamentally two autopilot modes, each activated by a single button. TRK+ALT flies the aircraft in a commanded direction and holds altitude, while HSI+ALT flies the navigation source on the HSI, such as a GPS flight plan or VOR. ○ New: Expert Autopilot Controls that include all of the autopilot modes IFR pilots need to complete their mission, including VNAV, IAS Hold, mode sequencing, fully-coupled approaches, a Flight Director with single cue (v-bars) or dual cue (crosshairs) presentation, and more. ○ New: Support for external LEVEL button via SkyView display contact input. ○ New: Support for SkyView VHF COM Radio (25 kHz). ○ New: Ability to display, in the Top Bar, status of SL40, SL30, Icom A210, and other COM radios that use the Garmin format. ○ New: Ability to send COM radio frequencies to SL40, SL30, Icom A210, and other radios that use the Garmin format. ○ New: Ability to send NAV radio frequencies to SL30 and other radios that use the Garmin format. ○ New: MDA (minimums) bug and relevant "approaching minimums" and "minimums" alerts. ○ New: SV-BAT-320 mini self-test at every shut-down. Manual "full" test that is designed to be used annually to confirm that the battery is still capable of providing >45 minutes of power to a display. ○ Improved: SV-EMS-22X Pin 23 now usable as an Enhanced General Purpose Input (Type C). You must have the June 2013 (or later) version of the Engine Sensor Definition File loaded to enable this capability. ○ Improved: SkyView's own map-based navigation changed from GPS 0 to SKYVIEW in the HSI information area. ○ Improved: Selected courses are now remembered for each HSI Source. ○ Improved: VRPs now categorized correctly for all aviation data sources. ○ Improved: Fuel computer maximum full capacity increased to 999 gallons. ○ Improved: Fuel Flow can now display up to 999 GPH. ○ Improved: Fuel Remaining will now decrement as soon as fuel flow is detected. Previously required presence of RPM and/or oil pressure to begin decrementing Fuel Remaining. ○ Updated: ADS-B traffic will now be displayed when a Garmin GTX 330 ES transponder is configured. ○ Changed: Serial ports are now managed for the whole system, not per-display. This means that all serial devices must be connected to the same serial ports on all displays in parallel (this applies to both TX and RX wires). ○ Fixed: Update to map airspace colors now built into software update and no longer requires separate .dfg file load. ○ Fixed: Traffic from TIS "format" devices is now still displayed when the setting to allow TIS traffic from an SV-XPNDR-26X is set to OFF. ○ Fixed: TM250 support. ○ Fixed: Traffic fail no longer displayed when an SV-ADSB-470 is installed without a transponder capable of enabling the traffic receiving capability of the SV-ADSB-470. ○ Fixed: Garrecht TRX-1500 now supported via TIS format instead of Flarm data format. ○ Removed: Support for drawing legacy "power user" placemarks. Old placemarks files will import as user waypoints. • Software changes in SkyView Software v6.1 released June, 2013 (no documentation changes): ○ Update: Support for minor hardware changes in SkyView displays. This release was not released on the web site. There are no new features in this release. • Software changes in SkyView Software v6.2 released July, 2013 (no documentation changes): ○ Improved: Decreased starting voltage requirement for initial/recurrent SV-BAT-320 test to allow it to start when close to fully charged. ○ Improved: Language and layout of initial/recurrent SV-BAT-320 test page. ○ Improved: AP Flight Director damped for improved usability. ○ Improved: Various small fixes for SV-COM-C25 radio.

Revision	Revision Date	Description
		○ Improved: Boot reliability on displays that sometimes booted to a "...contact Dynon Avionics..." or other similar message on the Dynon Avionics logo boot/splash screen. ○ Changed: Default MIC GAIN setting for COM radio is now 50%. ○ Fixed: Flight Director now commands the correct pitch when FLIGHT ANGLE PITCH ADJUST setting is non-zero ○ Fixed: Displays reliably turn on using button 1 after it had been previously powered down by holding button 1. Bug introduced in 6.0 required a manual reboot or external power cycle. ○ Fixed: 30 second automatic SV-BAT-320 self-check that occurs during a normal power-down now captures additional weak battery conditions. • Revised for installation of SV-COM-C25. • Revised for Expert IFR AP mode and Simplified VFR AP mode. • Updated SV-BAT-320 Initial Battery Test and Annual Test. • On multi-display systems, serial port configuration is now identical on all displays (SYSTEM SETUP). Previously serial ports were configured individually on each display. Updated all reference referencing serial ports that the same serial ports MUST be used on all displays. • Updated SV-ADSB-470 section to reflect that a Garmin GTX 330ES will now enable display of ADS-B traffic (in addition to Dynon Avionics SV-XPND-261 or -262). • Updated SV-EMS-220/221 to reflect that Pin 23 is now a "Type C" input (was previously only Pins 8, 22, and 31). • Updated SkyView display Contact #1 Input is now (Optional) AP External LEVEL Button. • Updated SL30 instructions – now able to monitor status on top bar and push frequencies. • Added SL40 wiring instructions – now able to monitor status on top bar and push frequencies. • Added recommendation in SV-NET-SERVO instructions not to route power, ground, and CWS using unused pins on the 9-pin connectors. • Added instructions for connecting RPM for Rotax 914. • Added instructions on setting Pulses Per Revolution for Jabiru engines and Rotax 912. • Added detailed instructions for displaying status of Heated Pitot Controller on EMS. • Added explanation about priority of displaying one of two RPM signals, if two are connected. • 326 pages
P	September, 2013	• Document number changed to 101320-015 • Software changes in SkyView Software v7.0: ○ New: Geo-referenced approach / departure procedure charts and airport diagrams. See the Dynon Avionics database downloads page for more information, and Seattle Avionics' Dynon Avionics page to purchase and download data. ○ New: Map Pointer can now select airports, airspace, navigation aids, waypoints, and other map items. Pop-up information on selected items minimizes the need to go to info pages. Direct-to and Info buttons act on selected map items. ○ New: Up / Down Timer under MAIN MENU > TOOLS > TIMER. Replaces clock in top bar when active. ○ New: Auto-repeating Fuel Tank Switch Reminder, based on customer-specified elapsed time or fuel quantity used. Annunciated via audio and message area alerts. Auto-repeats. ○ New: Terrain elevation and difference from aircraft altitude to information bar that is displayed when using the Map Pointer. ○ New: ATC and FSS frequencies added to the NRST list (FAA data only). ○ New: MAP ITEMS > AIRSPACE ALTITUDES selection to choose whether airspace altitudes are displayed on map. Map Pointer can now be used to highlight and see information about individual airspace segments. ○ Improved: Pressing NOSE UP or NOSE DOWN when in ALT HOLD autopilot mode (expert control scheme only) allows the aircraft to immediately climb or descend. Initial VS follows the Default Climb / Descent Vertical Speed settings. ○ Improved: "Hold to engage" autopilot engagement method behavior now annunciates which modes will engage upon release of button.

Revision	Revision Date	Description
		○ Improved: Center-click of joystick knobs now supported in the PFD function menu as well as the MAP. Center click can now be used to pull up, set, and sync (by holding) the PFD joystick functions menus (bugs, baro, CRS, etc.). Press and hold time reduced for better UX. ○ Improved: Audio alerts are suppressed for the first 5 seconds after SkyView fully boots to allow for system stabilization. • Software changes in SkyView Software v7.0.1 (no documentation changes): ○ Fixed: Bug that can cause SkyView to stop responding properly when an ADS-B-based TFR is selected using the map pointer. ○ Fixed: Ability to reliably save screenshots to an attached USB memory stick by pressing buttons 2+7 simultaneously. • Software changes in SkyView Software v7.1 (no documentation changes): ○ New: Support for European charts from PocketFMS. ○ New: Support for European charts from Seattle Avionics (Note that Seattle Avionics European charts have technically been supported since 7.0. Data availability from Seattle Avionics is expected soon) ○ Improved: Up timer now stops at 99:59 instead of rolling over to 00:00 ○ Improved: FOLLOW mode for chart viewer now defaults to on for airport diagrams to aid situational awareness. ○ Changed: Timer expiration is now a message, not a caution alert. ○ Fixed: Follow mode on charts that have rotation applied to them now tracks correctly. ○ Fixed: Bearing pointers no longer displayed shown when a Garmin GNC 225 is tuned to a localizer Frequency. • Last revision of this manual that was printed and included with SkyView displays • Clarified power consumption for SkyView displays. • Clarified 912 iS fuel pressure measurement requirements. • Added alternate sealing washer recommendation for oil temperature sensor. • Added configuration information for new Fuel Tank Reminder feature. • Clarified SV-BAT-320 Test Procedures. • Default Climb and Descent Vertical Speeds now used in some Expert Autopilot scenarios. • Added ADS-B configuration information to 430/530/GTN connection instructions for using those products' TSO'd GPS position with SkyView's transponder ADS-B Out capability. • 328 pages
Q	March, 2014	• Document number changed to 101320-016 • *No Software releases between v7.1 and 10.0 – discontinuous version jump.* • Software changes in SkyView Software v10.0 (***The New SkyView***): ○ New: Support for SkyView Touch (SV-D1000T). ○ New: Support for SV-AP-PANEL dedicated autopilot control panel. Supports speed-scheduling of its integrated two channel trim controller. ○ New: Support for SV-KNOB-PANEL dedicated knob control panel. ○ New: Enroute charts, including VFR, IFR LO and HI. US support via existing Seattle Avionics Subscriptions at release. Support for other regions to follow. ○ New: Conventional analog "six-pack" display mode for primary flight instruments to aid in transition training to glass cockpit displays. ○ New: Dual engine monitoring support by using two SV-EMS-22X modules. Note that each engine requires its own SkyView display. ○ New: Monitor up to 28 total EGT and/or CHTs by using a second SV-EMS-22X module. Enables full EGT/CHT support on 9 and 14 cylinder engines. Note that this capability cannot be combined with the dual engine monitoring support above. Unlike dual engine monitoring, this feature is available on a single screen. ○ New: Track line with time and distance markers on the map. ○ New: Option to show a second row of text on Nearest Airport list with the full name of the airport. Configure under MAP MENU > NEAREST LIST OPTIONS > SHOW FULL AIRPORT NAME. ○ New: Altitude Intercept Arc (AKA periwinkle plantain) depicts the location that the aircraft will intercept the current altitude bug setting based on the current flight path.

Revision	Revision Date	Description
		○ New: SkyView can switch its HSI Source when an external IFR NAV+GPS navigator such as the Garmin GNS (430 and similar) or GTN series direct it to. Configure under SYSTEM SETUP > ARINC-429 > ALLOW AUTO SWITCH. Note that when this is enabled, the external navigator's CDI/source select feature must be used to switch between the GPS/NAV sides of the device, even manually. ○ New: Textual ADS-B winds aloft for the most recent forecast period added to airport WX info pages where available. When unavailable at the actual airport, the report for the nearest station within 200nm is shown. ○ New: Options to filter the nearest airport list based on runway surface, length, and airport type. Configure under MAP MENU > NEAREST LIST OPTIONS. Once configured, toggle this filter on and off via the NRST > FILTER button. ○ New: "Check gear" and "gear overspeed" audio alerts for retractable gear aircraft that are tied to both landing gear status and airspeeds. ○ New: "Gear up for water landing" and "gear down for runway landing" audio alerts for amphibious aircraft that are annunciated as a selected airspeed is transitioned through. ○ New: Flight plans from ARINC IFR GPS navigators such as the GNS and GTN series can be displayed both on SkyView's map (including holds and other procedure turns) and on SkyView's flight plan display. Note that these externally sourced flight plans cannot be changed on SkyView. Viewing these does not inhibit SkyView's own flight planning engine from being used concurrently. ○ New: Vertical Speed Required to destination Info Item on map and PFD VSI displays the current VS required to set up at a specified point at or before and above your final destination waypoint. ○ Improved: Pressing knob/joystick center-click from within the FPL menu bring ups insert waypoint function. ○ Improved: SkyView will no longer allow system software upgrades if previously-detected autopilot servos, SkyView Network modules, or SkyView com radio are not powered on. ○ Improved: All EMS widgets that have assignable color ranges (red/yellow/green/black) now have additional color options: blue, white, purple, cyan, and orange. ○ Improved: When the map pointer is selecting a single item, range is still enabled by turning the map joystick knob (if two or more items are under the pointer, turning the knob chooses which one is selected). ○ Improved: Radios such as the Icom A210 that can receive frequencies but do not output status now need not cause the top bar radio status area to show a "red x". Added DISPLAY COM IN TOP BAR option to configure this behavior. ○ Improved: Fuel Tank Switch Reminder is now based on Flight Time and not engine Run Time. ○ Improved: Yellow/red terrain alert coloration disabled on the map page when not in flight. ○ Improved: HSI SRC added to expert autopilot menu to aid source switching while configuring and changing autopilot modes. ○ Improved: GPS waypoints now displayed in HSI info area for ARINC navigators such as the GNS and GTN. ○ Improved: External GPS and NAV radios can now be named with a user-configurable 7-character "friendly name" to aid in identifying sources on the HSI display. ○ Improved: HSI courses are now remembered for each HSI source. This is especially helpful when switching between VOR and ILS or GPS and ILS sources. ○ Improved: Smoother screen transitions during boot. ○ Added: 60% page available for PFD page to better afford split-screen with analog flight instruments in two horizontal rows. ○ Added: Touchable Map Info Items for Direct-to, Info, Nearest, Flight Plan, and Map Menu. ○ Added: Support for MGL V6 and V10 Com radios. ○ Added: Support for the Trig TY91 Com radio (25 kHz only). ○ Added: Support for Val NAV 2000 NAV radio.

Revision	Revision Date	Description
		○ Added: Pre-upgrade settings files are now saved to a subdirectory on the USB memory stick to aid technical support troubleshooting. ○ Added: Tail numbers for ADS-B equipped traffic will be shown below traffic targets when available. Only available for aircraft equipped with Dynon Avionics' ADS-B receiver, and will only be shown for target aircraft that are ADS-B OUT equipped. ○ Restored: Bank angle limit can now be set for autopilot. This was previously removed in 6.0. ○ Changed: PFD>SYNVIS button changed to MODE to support a sub-menu with various PFD-related display options, including SynVis and six-pack display modes. ○ Changed: All EMS timers that were formerly had "flight" or "flt" in their names are now called "air" timers. This respects the ICAO convention that "air time" is the time spent in the air, which is what these timers endeavor to capture. Additionally, "flight time" is often regarded as engine start-to-stop time by many customers. The underlying behavior of these timers has not changed. ○ Fixed: Data logs should no longer unexpectedly split into multiple files. ○ Fixed: Bug which could cause SkyView to not recognize SV-BAT-320 Li-Ion SV-BAT-320 after rare abnormal boot-ups. ○ Fixed: Timer expiration now flashes in white, not yellow, in top bar. ○ Fixed: "Show Airspaces Below" feature did not always properly filter out airspaces whose altitudes were defined by flight levels (primarily in non-US data). ○ Fixed: Fuel Tank Switch Reminder is now a message, not a caution alert. ○ Fixed: Warning, caution, and message alerts that do not have their own dedicated audio phrases were not annunciating the generic "warning", "caution", and "message" audio phrases they should have been. This bug was introduced in SkyView 7.0-7.1. It worked properly previously and is fixed with 10.0. ○ Fixed: Items that shouldn't be appearing on the map per the "map items" zoom/range declutter settings were appearing when the map was very zoomed in. ○ Fixed: Some ADS-B METAR / TAF stations not showing their weather information even though they have reports available for them. ○ Service Bulletin / Fixed: Customers who have both a SV-XPNDR-26X transponder AND a Garmin GTN or GNS series navigator that is providing directly-wired ADS-B format position to the transponder must update the SV-XPNDR-261/262 Software to version 2.04 or later at or before the aircraft's next annual condition inspection. This requirement only applies to aircraft that operate in US airspace. SkyView 10.0 contains SV-XPNDR-261/262 Software version 2.04 and can be used to satisfy this requirement. See the full service bulletin for full details. • Software changes in SkyView Software v10.1 released April, 2014 (no documentation changes): ○ Improved: Analog six-pack airspeed tape representation no longer adds an additional hundred knots of range at exactly 100, 200, 300, etc. knots. ○ Fixed: ADS-B traffic status did not always indicate "FULL" when it did in fact have a full traffic portrait. ○ Fixed: Columns in the MAP > INFO > RECENT tab were incorrectly spaced. ○ Fixed: Visible grid pattern on some displays at close ranges when enroute charts were displayed. ○ Fixed: Traffic fail icon no longer displayed on systems that do not have any traffic-receiving devices configured. ○ Fixed: Displays that did not have a SV-BAT-320 connected would rarely annunciate that a battery test was needed. ○ Fixed: EMS graphical widgets would draw beyond their range endpoints. ○ Fixed: Airspace altitudes would not display on the map, even when MAP MENU > MAP ITEMS > AIRSPACE ALTITUDES was set to on. ○ Fixed: Displays that rarely booted up to white screen that would require a power cycle to bring up. ○ Fixed: If connected, external alarm light would not annunciate until the actual alert was displayed and acknowledged using button 8. ○ Fixed: "CHECK GEAR" would not be annunciated correctly when the LANDING GEAR CHECK SPEED was set below 60 knots.

Revision	Revision Date	Description
		○ Fixed: Displays without backup batteries would not always automatically restart if their input voltage dropped below 10V (for example, during engine crank.) • First revision of the SkyView System Installation Guide that is electronic-only, included on USB flash drives packages with SkyView displays, and posted to Dynon Avionics website. • Added SV-D1000T touch setup (Page 4-28) • Added SV-AP-PANEL installation (Section 17) • Added SV-KNOB-PANEL installation (Section 18) • Added information about Transponder software update to v2.04 (Page 11-20) • Setup for dual SV-EMS-220/221 to monitor all cylinders of a 9-cylinder radial engine (Pages 7-29, 7-30, 7-31) • Added setup for monitoring dual engines with dual SV-EMS-220/221 and at least two SkyView displays (Page 7-32) • Added Contacts Used for Landing Gear section (Page 7-56) • Added additional color choices in EMS ranges, choices now include Blue, Cyan, Orange, Violet, White, and Yellow. (Page 7-64) • Added and updated serial connection details for Garmin / Apollo SL30 COM/NAV radio, Garmin / Apollo SL40 COM radio, Val Avionics NAV 2000 NAV radio, Icom IC-A210 COM radio, MGL V6/V10 COM radio, and Trig TY91 COM radio (Pages 4-16 through 4-18) • Added GPS and NAV devices can now be named with a user selectable seven-character name instead of POS x, NAV x, GPS x • Added explanation of new ALLOW AUTO SWITCH in setup of SV-ARINC-429 (Page 12-11) • Added explanation of software upgrade cannot proceed if previously configured SkyView Network devices are not connected (Page 3-15 and 3-16) • Added extensive Harness Construction Notes for connecting single and dual SV-COM-C25s to an SV-INTERCOM-2S. (Section 16) • Added procedure for adjusting 912 iS CAN fuel flow reported to SkyView Fuel Computer (Page 7-28) • Added caution not to over-torque fasteners used to mount SV-BAT-320 (Page 9-2) • Added information to display VP-X BATT VOLTS widget in EMS display (Page 11-14) • Added information on using “FTP client” to download very large terrain database files (Page 6-3). • Added information about Rotax 914 EGT sensors (Page 7-35) • Added information about Rotax 914 fuel pressure sensor (Page 7-39) • Added SV-EMS-220 / 221 is required for display of VP-X information (Page 13-1) • Added that Altitude Encoder output for Garmin SL70 is supported (Page 4-15) • Added Kavlico Pressure Sensor Manufacturer Part Numbers (Appendix G) • Improved TSO / Part 23 applicability statement (cover) • Improved guidance for installation of SV-GPS-250 (Page 2-10 and Page 8-2) • Improved information about Rotax 914 air box temperature sensor (Page 7-55) • Improved guidance that SV-XPNDR-262, even after Software update, will not meet the requirements of the FAA 2020 ADS-B “mandate” (Section 11 - SV-XPNDR-261/262 Installation, Configuration, and Testing) • Improved guidance that ADAHRS/EMS/SYSTEM/NMEA Serial Output must be connected to all SkyView displays. Updated similar guidance for other devices connected via serial port, made language consistent on all devices connected via serial port. (Pages 4-11 through 4-19) • Improved guidance for installation of External LEVEL Button (Page 10-13) • Improved guidance on monitoring Heated Pitot status (Page 15-7) • Corrected: SV-COM-C25 Sensitivity (Page 18-6) • Corrected: To use Garmin 330ES with SV-ADSB-470, setting HEX CODE procedure is required for all software versions (Page 14-1) • 361 pages
R	August, 2014	• Document number changed to 101320-017 • Software changes in SkyView Software v11.0: ○ New: All terrain databases improved. Not technically dependent on 11.0 (will work on all SkyView systems), but released concurrently. All customers should download updated very low, low and high resolution terrain databases. ○ New: Support for SV-COM-X83 8.33 kHz COM radio.

Revision	Revision Date	Description
		○ New: Support for Video Input Adapter. Allows display of video via NTSC and PAL S-video and composite connections. Note: Only compatible with SkyView Touch and newer SkyView SV-D1000 (s/n >= 6000) and SV-D700 (s/n >= 4000) displays. ○ New: Support for third party 8.33 kHz COM radios. Supported radios include the Trig TY91/92, f.u.n.k.e. ATR833, and Garmin GTR 225 & GNC 255 radios. Note that full TY91/92 8.33 kHz support depends on a future software update from Trig. ○ New: Virtual-DME (non-certified) distance to VORs via GPS when the VOR identifier is known. Magenta distance is displayed on HSI info area on PFD. ○ New: SHOW AIRSPACES WITHIN XXXX FT option to declutter airspaces that aren't a factor at the current aircraft altitude. ○ New: Wide field of view option for Synthetic Vision under PFD > MODE > WIDE. Setting also proportionately scales the pitch ladder. ○ New: Vne can now be set as TAS for aircraft that have flutter or other TAS-dependent limits. ○ New: Option to turn on color-coded weather "dots" at airports with METARS via MAP MENU > WEATHER OPTIONS > METAR ICONS (SV-ADSB-470 required). ○ New: BARO will now sync to either the nearest METAR (when ADS-B is available in-flight), to 29.92 (when at/above 18k feet or no ADS-B on board), or to make the altimeter match GPS altitude (when on the ground). ○ Added: Tune LOC/ILS frequencies (VORs already previously supported) on supported NAV radios via SkyView database lookup. LOC/ILS frequencies only available via Dynon Avionics and Jeppesen (coming soon) Databases. ○ Added: Alerts are now recorded in the user datalog. These are in a new file - ALERT_DATA.csv - so to not affect compatibility with 3rd party utilities that can utilize SkyView datalogs. ○ Added: Alert when EMS sensor definition files do not match across multiple displays in a SkyView system. ○ Added: Traffic can now be displayed on SkyView when a non-Dynon Avionics ADS-B OUT transponder is installed in the aircraft. Such transponders must comply with TSO C166b or later of the ADS-B spec to allow traffic to be displayed properly. ○ Added: Setup option to display or suppress tail numbers of other ADS-B equipped aircraft (requires SV-ADSB-470). ○ Added: Caution alert if transponder hex code is not set. ○ Added: Option to alert the pilot when the current BARO setting and the nearest METAR-based altimeter setting are significantly different (requires SV-ADSB-470). ○ Added: Audible "AUTOPILOT" callout when the autopilot is engaged. ○ Added: Support for CAN-based MWFly engine via SV-EMS-221 ○ Added: Alerts when SV-AP-PANEL, SV-KNOB-PANEL go offline. ○ Added: Alert when an external Level button is connected and detected stuck at boot. ○ Added: Ability to suppress the units (F, PSI, etc.) on EMS widgets via EMS SETUP > SENSOR SETUP > [individual sensor settings] ○ Added: GPS-based distances to bearing sources in HSI info area (when only one bearing source is displayed). ○ Added: Alert for detectable audio subsystem failures. ○ Added: MAP MENU > FLIGHT PLAN OPTIONS > PLAN GROUND SPEED lets SkyView perform ETE, ETA, and other speed-dependent calculations at a user-specified ground speed when not flying. ○ Added: Support for South African SRA and other rare airspaces. Part of MAP ITEMS > UNKNOWN ALERT AIRSPACES category. ○ Improved: Autopilot speed limits will not allow engagement or operation above 95% of Vne when Vne is expressed as TAS. ○ Improved: Traffic service/device reception quality indicator on map page. ○ Improved: MAP MENU > MAP ITEMS > SHOW AIRSPACES BELOW changed to HIDE AIRSPACES ABOVE for clarity. ○ Improved: Autopilot trim-up and trim-down sensing and annunciation. ○ Improved: Additional failure detection and annunciation of rate sensors, accelerometers, and pressure transducers in the SV-ADAHRS-20X upon boot.

Revision	Revision Date	Description
		○ Improved: Alert that annunciates if there is no high-res terrain available for the current aircraft location (usually because a different world region is loaded). ○ Improved: Distance and speed units settings are now separately set. ○ Improved: Fuel efficiency can now be displayed in L/100km. ○ Improved: Magnetic heading calibration procedure now allows a pilot choose the direction aircraft is pointed in. ○ Improved: SkyView will now detect and annunciate if the servo disconnect switch is depressed when the servo calibration and test is started (this is usually due to a wiring installation issue or incorrect disconnect switch type). ○ Improved: Rotax 912 iS fuel pressure filtering improved to reduce nuisance alarms during abrupt throttle movements. ○ Improved: SkyView displays start-up much quicker, allowing for quicker use of PFD and EMS functions. Map databases are now loaded after initial boot. ○ Improved: Map database expirations on map at startup are more verbose. ○ Improved: Joystick knob menu now annunciates successful sync of any bug or BARO setting when you press/hold the joystick knob. ○ Improved: Bugs can now be turned on and off per display via PFD>BUGS. The presence of an autopilot no longer forces all bugs to be shown on all displays. ○ Improved: EMS pulses per revolution settings moved to HARDWARE CALIBRATION > EMS CALIBRATION > TACHOMETER CALIBRATION. ○ Improved: Display dimming algorithm and menu control scheme improved to disallow brightness settings that would result in an illegible (too dim) display. ○ Improved: Airport identifiers on MAP are now white to improve legibility. ○ Improved: On-ground logic for showing terrain highlighting on map to reduce red/yellow map saturation immediately after takeoff ○ Improved: Screenshots now export to PNG format instead of BMP for better cross-platform compatibility (you're welcome Apple users). ○ Improved: Track line now defaults to DISTANCE + TIME. ○ Improved: PFD>XPNDR menu no longer has a time-out that automatically backs out of menu. ○ Improved: New displays that do not have ADAHRS and EMS modules configured no longer display PFD/EMS pages that look like failures. ○ Improved: ROP/LOP EMS info widget now says "PK?" instead of "UND" when calculation is out of range or not possible for the configuration. ○ Improved: AOA alert volume can now be set independently of Master Volume and other Alert Volumes. ○ Improved: After CLEAR ALL DATA (data logs), a confirmation message appears that all data log records have been cleared. ○ Fixed: G-meter can now accommodate aircraft that have a positive lower G limit. ○ Fixed: "Check Canopy Latch" alerts no longer repeat. ○ Fixed: Analog airspeed indicator needle in six-pack mode now "settles" lower than the first graduated airspeed marking when at rest. ○ Fixed: VAL NAV-2000 no longer available for selection as primary COM radio in the top bar status bar (because it is a NAV-only radio). ○ Fixed: Aircraft hex code can now be more easily programmed into SkyView for ADS-B identification of your own aircraft when a non-Dynon Avionics ADS-B out device is in the aircraft. ○ Fixed: Active TFRs now correctly prioritized over upcoming TFRs when using the Map Pointer. ○ Fixed: NAVIGATE button can be pressed after importing a flight plan to put it to immediate use. ○ Fixed: Reassigning knob functions was not possible via Touch while in TOOLS>TIMER menu. ○ Fixed: SV-AP-PANEL backlight now turns off when SkyView is off. ○ Fixed: Support for GX-60 via "GENERIC AVIATION" serial format type. ○ Fixed: MDA bug state not saved across power cycles. ○ Fixed: Track line would always turn off after a reboot. ○ Fixed: SV-COM-PANEL status LED flashed too fast. ○ Fixed: Winds aloft forecast used the most future forecast instead of the immediately upcoming forecast time period.

Revision	Revision Date	Description
		○ Fixed: If dual ADAHRS installed, during magnetic calibration and one ADAHRS fails, a message appears denoting which unit failed the calibration. • Software changes in SkyView Software v11.1 released October, 2014 (no documentation changes): ○ Fixed: Some TFRs received via ADS-B were not being displayed. Pilots are always encouraged to confirm TFR status with an official briefing source. ○ Fixed: In some cases, Van's RV-12 customers (with the Vans AV-50000 control unit) or customers equipped with the Vertical Power VP-X experienced over-current issues; prerequisites for this to occur: 1. SkyView Software v10.0, v10.1, or v11.0 loaded, and 2. Installation must have a voltage drop between SkyView and its aircraft power source. This is most-commonly caused by a wiring path with higher than usual resistance, and 3. SkyView is powered up on its SV-BAT-320 before aircraft power is applied to SkyView. ○ Fixed: The user waypoint editor in MAP MENU > EDIT USER WAYPOINTS did not display correctly in v11.0. ○ Fixed: SkyView would incorrectly display a "NO HIGH RES TERRAIN" alert when the new "Continental Australia Only" or "China Only" regions were loaded. ○ Fixed: ADS-B weather layer would erroneously show very thin bands of purple "missing" data, when in fact the data was available and was being displayed. ○ Fixed: Loading a packaged Dynon Avionics software update with a ".duc" file extension could cause SkyView to report an erroneous "out of disk space" error on subsequent load attempts. ○ Improved: Added filtering of GPS position update to immobilize the GPS ground track direction when the aircraft is not moving. ○ Improved: Load times for large databases, notably high resolution terrain, has been greatly decreased. ○ Improved: An 11.0 feature designed to detect ADAHRS sensor failures occasionally provided nuisance alerts that would disable the ADAHRS when SkyView was powered on. 11.1 no longer compares Pitot and AOA pressures if AOA is not calibrated (for example when the AOA port on the ADAHRS is capped). Accelerometer failure checking is now more tolerant of tail dragger aircraft with significantly nose-high attitude on the ground. • New products: ○ SV-COM-X83 8.33 kHz VHF COM Radio (Section 17 and related information) ○ SkyView Video Input Adapter (USB) (Page 15-16) • New features: ○ Support for COM radios with 8.33 kHz tuning steps: ▪ f.u.n.k.e. Avionics ATR833 ▪ Garmin GTR 225 and Garmin GNC 255 ▪ Trig Avionics TY91 and TY92 ○ New alert messages for: ▪ Mismatch between SkyView BARO setting and BARO value reported from ADS-B (Page 3-12) ▪ New installation – modules not configured (Page 4-9) ▪ High-resolution terrain is not available for aircraft's current location (Page 6-3) ▪ Sensor definition files do not match between SkyView displays (Page 7-60) ▪ Transponder HEX CODE is not set (Page 11-15) ▪ AP Disconnect/CWS Switch and External LEVEL Button status is checked at boot. (Page 10-13, 10-14) ▪ AP Disconnect/CWS Switch is checked upon entering SERVO CALIBRATION (Page 10-16) Wide field of view for Synthetic Vision (Page 3-12) ○ Vne can now be expressed as TAS as well as IAS (Page 5-8, 10-20) ○ MW Fly AEROPOWER engines supported in SV-EMS-221 (Page 7-1) ○ ADS-B traffic display enabled with non-Dynon Avionics ADS-B OUT devices (Page 14-1) ○ Independent volume control for Angle of Attack (Page 15-7) • Documentation added:

Revision	Revision Date	Description
		○ Added explanation that SkyView can be powered on during engine start (Page 2-5) ○ Recommendation to install Panel Mount USB cable with each SkyView display (Page 2-6) ○ Serial port connection and configuration information for Emergency Location Transmitter (ELT) (Page 4-20) ○ External Dim Control Connections (Page 4-20) ○ SV-ADAHRS-200/201 must be installed level or the Slip/Skid Ball will not be centered (Page 5-3) ○ Caution about applying too much torque when installing SV-BAT-320 (Page 9-2) ○ Addition of capacitor to servo to eliminate Intercom noise (Page 10-12, 10-13) ○ Pin descriptions, added wiring diagram for SV-AP-PANEL Trim Controller installation (Section 19) ○ As of v11.0, SkyView does not have "Auto-trim" capability (Page 19-3) ○ Alert Data Log (Page 26-2) • Documentation improved: ○ Getting Started (Pages 1-2 through 1-4) ○ SkyView System Power Specifications (Table 2, Page 2-2) ○ Corrected SV-XPNDR-261/262 dimensions (Page 2-3) ○ Recommendation to not use stainless steel hardware for installing SV-ADAHRS-200/201, added recommendation to use Brass hardware (Page 2-8, Page 5-3) ○ Explanation of Dynon Avionics Diagnostic File (Page 3-10 and Page 3-16) ○ Updated screen shots throughout SV-D700 / SV-D1000 / SV-D1000T Installation and Configuration (Section 4) ○ Moved configuration information for Garmin GTX 330ES to Traffic Devices section (Page 4-14) ○ VAL NAV 2000 – frequency cannot be displayed on top bar (Page 4-17) ○ Updated SV-ADAHRS-200/201 Magnetic Calibration Procedure (Page 5-5) ○ Differences between SV-EMS-220 and SV-EMS-221 (Page 7-1) ○ Rotax oil pressure sensor connector charge (Page 7-41, 7-42) ○ Oil temperature sensor section, updated crush washer installation instructions. (Page 7-42) ○ Rotax 914 Differential Fuel Pressure Sensor UMA N1EU07D guidance improved (Page -7-44, 7-45) ○ Suppress units displayed on sensor widgets (Page 7-63) ○ Effect of setting ALLOW AUTO SWITCH to YES (LABEL 100P) for 430/530 (Page 12-7) and GTN-series (12-9) ○ Setup for transponders other than SV-XPNDR-261/262 with ADS-B OUT for receiving ADS-B Traffic information with SV-ADSB-470 (Page 14-1) ○ Check for blockage of AOA / Pitot lines prior to installation (Page 15-10) ○ SV-COM-C25 Post Installation Checks, Continued Airworthiness and Maintenance (Page 16-8, 16-9) ○ Non-Dynon Avionics Wire Harness Considerations (Page 21-2 through 21-4) ○ MAP button no longer available (Page 21-11) ○ Kavlico pressure sensors information (Appendix G) • 401 pages
S	January, 2015	• Document number changed to 101320-018 • Software changes in SkyView Software v12.0: ○ New: Support for Wi-Fi connectivity to ForeFlight via the new SkyView Wi-Fi Adapter. Transfer flight plans between SkyView and ForeFlight. Send SkyView's attitude indication and GPS position to ForeFlight. ○ New: Autopilot auto-trim. The SkyView Autopilot can automatically keep the aircraft in trim as it flies under autopilot control. This feature requires that the aircraft has an SV-AP-PANEL and is using its integrated trim controller for electric trim servo actuation. Auto-trim can be configured on pitch and/or roll axes. ○ New: OBS Mode that allows pilots easily set and adjust an inbound course to any navigable point on the map. That inbound course may then be easily adjusted with the HSI CRS knob, similar to how one would with a VOR. This is useful to approach an airport from a specific direction, for example, without having to create a second waypoint to create a full flight plan leg.

Revision	Revision Date	Description
		○ New: In-air magnetic calibration routine: Pilots can now perform an optional in-flight magnetic heading calibration routine in addition to the existing ground-based calibration. This is likely to improve magnetic heading performance during flight maneuvers. It may also improve heading performance in aircraft where the ADAHRS is subject to localized magnetic interference. ○ New: Aircraft icon displayed on the Map and in the PFD HSI can be changed to one of over a dozen types of aircraft. ○ Updated: Magnetic tables updated to latest World Magnetic Model (WMM2015). ○ Added: Autopilot trim advice on the roll axis can now be provided. This option is turned off by default. ○ Added: Alerts that let the pilot know if the CPU within SkyView's display is overheating due to failure of SkyView's thermal dissipation features. ○ Added: User data log export now includes a new log that documents the "history" of the databases, configuration files, and software versions that have been loaded. This information can be used to aid troubleshooting. ○ Added: Localizers now have their own icon on the map when they are used as a waypoint in an active flight plan. ○ Added: New option under MAP MENU > MAP ITEMS > TFR OPACITY that allows pilots to change the opacity of TFRs. This can be used to tune the visibility of co-located TFRs and underlying map features. ○ Added: Support for sending/receiving frequencies to the Garmin GTR-200. This does not include the ability to send aviation database information to the GTR-200. ○ Improved: MAP joystick/knob function can be set to either the left of right joystick/knob when MAP is full-screen (100% Page). ○ Improved: Map zoom/range feature can be reversed so that clockwise rotation "zooms in" to the map (decreases range) to suit user preference. ○ Improved: Ability to test an optionally-connected external EMS warning light via the setup menu. ○ Improved: When starting navigation via the "direct-to" feature, SkyView now anticipates the initial turn (if one is required) and starts navigating from the end of that initial turn. This eliminates s-turning after the initial turn towards the "direct-to" destination. ○ Improved: Video input can be flipped horizontally and/or vertically. ○ Improved: Since "ON" mode is almost never used in Mode-S operations, and pilots using that mode likely intend to / should be in ALT, a XPNDR NOT IN ALT MODE alert is presented whenever the SV-XPNDR-26X has been in "ON" mode for >5 seconds. ○ Improved: Diagnostic messages in the SkyView Network configuration pages that help pilots and installers troubleshoot loss of redundancy due to faulty or damaged wiring. ○ Improved: Filtering/damping improved on EMS parameters. This should particularly improve fuel level and 912 iS fuel pressure readings that were previously too reactive. Download the latest sensor definitions to ensure that you have the latest filter/damping factors. ○ Improved: Notification when the SV-BAT-320 is severely discharged upon boot. This is most likely to occur immediately after performing the yearly battery rundown test. ○ Improved: GPS location now sent to GNC 255 and GTR 225 radios to enable their ability to look up aviation features from their self-contained databases. ○ Improved: XPNDR HEX CODE NOT SET alert now provided whenever an ADS-B receiver is installed but a valid HEX code is not set. ○ Improved: Serial port selection in setup menu improved to help installers avoid attempting to configure a single port to multiple devices. ○ Improved: IAS bug now shown on six-pack PFD page. ○ Improved: Data log and settings file exports now have more descriptive file names. ○ Improved: EGTs and CHTs that are displaying a "red X" due to probe failure no longer show a railed pictorial value on the analog graph graphical display.

Revision	Revision Date	Description
		○ Improved: When a GTN or GNS series ARINC navigator is in GPS OBS mode, the selected inbound course to the waypoint being navigated to is depicted on SkyView's map when that navigator's flight plan is the displayed map. ○ Improved: Display auto-dimming improved to improve behavior during light changes such as when a flashlight is used at night. ○ Improved: Runways with unknown length are not shown when NRST list is being filtered by runway length. ○ Improved: Automatic switching of AIR and GROUND modes for the SV-26X-XPNDR when flying at low airspeed. ○ Improved: "GAMI"-style fuel flow spread is now always displayed in GPH to follow usage convention. ○ Improved: PFD pitch ladder clipping adjusted to avoid visual conflicts with turn rate and heading elements above the DG/HSI. ○ Improved: Knob debouncing algorithm changed to eliminate extra or erratic value changes when turning knobs. This affects both SkyView display knobs and those one SkyView control panels. ○ Fixed: Some damping filters defined in the engine sensor definitions file (.sfg) were not working properly. This was most usually observed as fuel levels that would respond too quickly to movement in the tanks while maneuvering. ○ Fixed: Bug that could cause autopilot servo calibrations to not complete or yield servos that controlled an incorrect axis. ○ Fixed: ADS-B Density Altitude calculation. ○ Fixed: SkyView would take longer (up to 2 minutes) to boot one time after high resolution terrain was loaded. This bug was introduced in 11.1. ○ Fixed: Airport icons in the NRST and INFO lists were erroneously being displayed as weather icons instead of the chart-style icons. ○ Fixed: PAL mode now works with Video Input Adapter. ○ Fixed: NO HI-RES TERRAIN message no longer annunciated due to GPS data loss. ○ Fixed: incorrect error message when trying to load .duc packages a second time. ○ Fixed: Upcoming TFRs received via ADS-B were incorrectly color-coded by local time instead of UTC time. ○ Fixed: When a USB stick containing expired chart data is removed, on-screen alerts about that expired data are no longer displayed. ○ Fixed: User alert data logs sometimes had corrupt values in them. ○ Fixed: Traffic vector length now correct for ADS-B targets. ○ Fixed: Not all data from Garmin portable GPS products was being passed along to compatible Garmin radios as if they were directly connected. • New features: ○ Support for Garmin GTR 200, page 4-20 ○ In-flight compass calibration procedure, beginning on Page 5-6 ○ Airplane icon in PFD Page Compass and MAP Page is now changeable, page 5-10 ○ External EMS Warning Light Test, page 7-59 ○ SkyView Video Input Adapter can now flip the image horizontally and/or vertically, page 15-10 ○ Autopilot Auto-trim configuration, Section 18 ○ History datalog, page 25-3 • Documentation improved: ○ Updated weights for major and minor units, rationalized to all the same units ○ Updated Power Consumption table, page 2-2 and 2-3 ○ Updated (US-Only) Equipping Your Plane for full compliance with FAA 2020 ADS-B Out mandate, page 11-2) ○ Updated Transponder settings, page 11-16 through 11-18 ○ Updated AOA/Pitot Installation (section) to defer mechanical and electrical installation to the separate Heated and Unheated AOA/Pitot Probe Installation Guide, pages 15-1 through 15-4 ○ Updated SkyView Network troubleshooting, improved error message, page 20-9 ○ Updated Table 75 - SV-EMS-221 D37M Transducer Connector, page 22-10 and 22-11

Revision	Revision Date	Description
		○ Corrected Pin 18 of SV-EMS-220/221 in Table 74, page 22-10) and Table 75 (Page 22-11), incorrectly stated 500 mA output; corrected to 300 mA output. ○ Updated User datalog filename explanation, page 25-3 ○ Updated Kavlico Pressure Sensor P/Ns reference, page 26-1 ○ Updated mentions of SV-EMS-220/221 Pin 18 fuse; added that fuse is self-resetting. • 401 pages
T	February, 2015	• Document number changed to 101320-019 • No Software changes from previous revision (v12.0) • New products: ○ SkyView Wi-Fi Adapter (Page 15-12) • Documentation improved: ○ Improved Power Consumption guidance (Page 2-2 and 2-3) • 403 pages
U	May, 2015	• Document number changed to 101320-020 • *No Software releases between v12.0 and v12.2 – discontinuous version jump.* • Software changes in SkyView Software v12.2: ○ New: Support for SV-MAG-236 Remote Magnetometer for SkyView. ○ New: SV-XPNDR-261/262 Software update to version 2.6 to support ADS-B+ format from capable Garmin IFR navigators. Using ADS-B+ format is a requirement for having an FAA ADS-B rule compliant installation in 2020 and beyond. Note that the SV-XPNDR-261/262 Software update must be manually initiated and does not happen automatically during a SkyView software update. ○ Improved: SkyView now remembers the last two hours of ADS-B weather and all active/upcoming TFRs after when SkyView is power cycled. This gives the pilot access to weather and TFR information that is still valid when SkyView is turned on and acquires time via GPS lock. ○ Improved: Fuel computer no longer compares fuel computer totals to measured fuel in aircraft that do not have in-tank fuel level sensors. ○ Improved: EMS General Purpose inputs can now report computed values of up to 99.99V (formerly the limit was 9.999V) when a custom engine sensor definition is used to transform the 0-5V input into another set of values. Note that the actual measured value of sensors is still limited to 5V. ○ Updated: US Stadium TFRs now provided via database file after the ADS-B FIS-B service ceased transmitting them. [UPDATE - 5-7-2015; This feature has been delayed until SkyView 13.0 due to database compatibility issues with older SkyView software.] ○ Fixed: User data logs' time stamps were off by one day. ○ Fixed: SkyView did not recognize more than 20 GPX files on a USB memory stick. ○ Fixed: Permanent Disney TFR shown as upcoming instead of active. ○ Fixed: Filtering for 912iS fuel pressure improved. For best results also update to the latest engine sensor definitions. ○ Fixed: SkyView would restart for some customers after exporting data logs. ○ Fixed: Course would sometimes change erratically and not react to CRS changes when flight plans were suspended/on hold. ○ Fixed: 11.0 feature to detect failures of rate sensors, accelerometers, and pressure transducers in the SV-ADAHRS-20X upon boot did not work unless an AOA calibration had been performed. • New Products: ○ SV-MAG-236 Remote Magnetometer • New Features: ○ Transponder software v2.06 - compatibility with Garmin ADS-B+ serial data format, page 11-20 thru 11-24 • Documentation added: ○ USB Flash Drive Considerations, pages 3-15 and 3-15 ○ Wire color / pin tables for Kavlico sensors, Section 7 • Documentation improved: ○ Added resolution and brightness of the SkyView displays, page 4-1 ○ Removed incorrect reference to serial port speed 115200, page 4-27 ○ Updated guidance on Rotax 912 iS installation, page 7-29 ○ Updated guidance for transponder Antenna Ground Plane, page 11-13

Revision	Revision Date	Description
		○ Updated Table 73 – SV-COM-C25 Specifications, page 22-6 ○ Updated format of V if the signal is in volts (contact input), page 25-11 ○ Updated Appendix B: Specifications ○ Changed references to “backup settings file” to “EXPORT SETTINGS file” • 419 pages
V	August, 2015	• Document number changed to 101320-021 • Software changes in SkyView Software v13.0: ○ New: New enroute charts infrastructure and format to support additional enroute (ICAO/Sectional/etc.) chart providers. Providers expected to distribute enroute charts support include PocketFMS, OzRunways, and AvPlan. Note: If you are a current Seattle Avionics ChartData subscriber, you MUST update your USB sticks with new format ChartData using the latest version of the data manager. To do this, make sure that the "Use data formatted for SkyView Software v13 or later" checkbox is checked, and then press UPDATE NOW. ○ New: SkyView now available in foreign languages. Languages available at release include French and German. ○ New: Color-coded terrain alerting on synthetic vision. Terrain is dynamically shaded in yellow or red to warn you when your projected flight path may intersect terrain in the short future. Terrain shaded yellow is that which you will be in close proximity to but does not represent an immediate threat. Terrain shown in red represents terrain that may represent an immediate collision hazard based on your current flight path. When operating within the vicinity of an airport, terrain alerting is made less sensitive to reduce visual noise near while operating in the airport/approach environment. This feature is turned on and off in PFD>MODE>TERR ALRT. ○ New: Ability to display the Rotax 912 iS' throttle position from its ECU via a new EMS widget. ○ New: Cold start assistance for Rotax 912 iS' engine. Status is displayed via color-coding on the new throttle position EMS widget. Color-coding matches the 2D graph as documented in the Rotax 912 iS manual. ○ New: Ability to display the Rotax 912 iS' Power/ECO mode state from its ECU via a new EMS widget. ○ New: Support for the Advanced Control Module (ACM) that is provided with Advanced Flight Systems Quick Panels. ○ New: Support for ADS-B compliant GPS connection from Avidyne IFD540/IFD440 navigators when connected directly to SV-XPNDR-261 transponder. ○ New: Support for ADS-B compliant GPS connection from Trig TN70 when connected directly to SV-XPNDR-261 transponder. ○ New: SkyView can now self-detect and alert on unexpected events that occur. Upon seeing a SYSTEM EVENT alert, user can enter the Setup Menu for more information. This can help alert the customer of an impending or emerging hardware or software issue. ○ Improved: Mic gain thresholds and defaults adjusted to improve transmission performance. ○ Improved: New enroute charts format improves resolution, clarity, and legibility of existing Seattle Avionics charts on SkyView. ○ Improved: Time setting verbiage updated to be less confusing to users. ○ Improved: Improved alerting for SV-XPNDR-26X when the transponder self-reports error conditions/performance issues. ○ Improved: PocketFMS ATZ airspaces now shown as Alert airspaces in SkyView. ○ Improved: Expired databases are now highlighted for better annunciation in the Setup menu based INSTALLED DATABASE page. ○ Improved: Synchronization of Hobbs and Tach time improved between displays to more accurately preserve time when displays are turned off individually. ○ Improved: Press and hold of joystick knob when Minimums bug is selected clears the value instead of syncing it. ○ Improved: When flying under autopilot, a single press of the autopilot disconnect switch no longer clears the programmed modes. Instead, it only disconnects the servos. Double clicking the disconnect switch will clear all modes. Additionally, pressing the disengage switch for 2 seconds when the Flight Director is on but the Autopilot is not engaged now engages the

Revision	Revision Date	Description
		servos but does not activate control wheel steering mode. Pressing/holding the disengage switch when the AP servos are active still activates control wheel steering mode. ○ Improved: Com frequency order for PocketFMS digital aviation data improved to preserve the native order as provided by PocketFMS. ○ Improved: SynVis "checkerboard" pattern now remains visually squared at higher latitudes. ○ Improved: Texture added to terrain on synthetic vision to aid situational awareness. ○ Improved: ZERO PRESSURE AIRSPEED CALIBRATION is now ZERO PRESSURE IAS/AOA CALIBRATION. Zero pressure calibration now includes the AOA sensor in order to provide best-possible performance of AOA, especially at low airspeeds. Users should ideally perform this calibration before performing their next AOA calibration. After performing these two steps, in the future, performing a ZERO PRESSURE IAS/AOA CALIBRATION should restore both airspeed and AOA performance without requiring a full AOA calibration. ○ Improved: Handling of USB memory sticks improved to increase fluidity of loading menus and update processes. ○ Improved: Delays after pressing the UPDATE button just previous performing a system software update eliminated. ○ Improved: User data logs now include data from CAN-based ECUs. This includes both the 912 is and MWFly engines. Fixed: SV-ADSB-470 appearing offline. This issue is rare. ○ Fixed/New: US Stadium TFRs now provided via database file after the ADS-B FIS-B service ceased transmitting them. This feature was initially available in 13.0, but the required TFR database did not load correctly. TFR database only available via packaged update due to incompatibility with versions prior to 13.0. ○ Fixed: Garrecht TRX-1500 is now AIR Avionics TRX-1500 ○ Fixed: Changing the map knob zoom range direction (MAP MENU > MAP MODE > INC MAP RANGE) COUNTERCLOCKWISE also erroneously changed SkyView Touch's + and - zoom buttons. ○ Fixed: Fuel calibration improved to better deal with calibrations that have sensors that do not register fuel calibration points near empty. ○ Fixed: Having spaces/underscores in tail numbers no longer causes configurational issues with Wi-Fi. • Software changes in SkyView Software v13.0.2 released August 5, 2015 (no documentation changes: ○ Fixed: Problem that prevented certain third-party enroute chart layers from being displayed. • Software changes in SkyView Software v13.0.3 released August 7, 2015 (no documentation changes: ○ Fixed: Flight plans that contain waypoints - particularly at the beginning of the flight plan - with blank names can cause SkyView to restart when that flight plan is drawn on the map. This issue has not been observed with SkyView's own internal flight planning. This issue is most likely to be observed when using an ARINC navigator such as a GTN series. Note that you can only experience this issue when the external navigator's fight plan is being displayed on SkyView's map. • New products: ○ SkyView EMS Sensor Definition File Revision 46371 dated 2015-07-16 • New features included in v13.0: ○ Support for downloadable language packs; SkyView operations can now be displayed in other languages (subject to availability of a language pack for a given language). SETUP MENU remains in US ENGLISH. ○ Support for Advanced Flight Systems (AFS) ADVANCED Control Module ○ User data logs will now include sensor data provided by an engine controlled via CAN Bus, such as Rotax 912 iS ○ SYSTEM EVENT detection – page 3-10 ○ ZERO PRESSURE AIRSPEED CALIBRATION now includes AOA – ZERO PRESSURE IAS/AOA CALIBRATION – beginning page 5-13 ○ Databases past their expiration date are now highlighted in Yellow in INSTALLED DATABASES – page 6-3

Revision	Revision Date	Description
		○ Rotax 912 iS Throttle Position widget, including cold start assistance – page 7-29 ○ Rotax 912 iS Power/ECO mode widget – page 7-29 ○ GRT CS-02 Hall Effect Current Sensor is now supported – page 7-54 and page 7-55 ○ Responsiveness of fuel level display can now be selected – "slow", "medium", or "fast" – page 7-50 and 7-51 ○ SV-XPNDR-261/262 error messages displayed – page 11-17 ○ Support for Avidyne IFD440 / IFD 540 and Trig TN70 GPS units connected directly to SV-XPNDR-261/262 as a high-integrity GPS source for ADS-B 2020 compliance – page 11-19 • Documentation added: ○ Mention of SV-GPS-2020 – has been announced, but not yet shipping, so no installation guidance in this revision – page 11-2 ○ Mention of TNC to BNC Adapter for SV-XPNDR-261/262 and SV-COM-X83 – page 11-15 and page • Documentation improved: ○ Updated all references to senders and probes (except AOA/Pitot) to "sensor" ○ Introduction improved – page 1-1 thru 1-3 • 435 pages
W	January, 2016	• Document number changed to 101320-022 • Software changes in SkyView Software v14.0.0.3486, released 2016-01-13. New: ○ Support for SV-GPS-2020 GPS Antenna/Receiver Module. When paired with the SV-XPNDR-261 (with updated Software) and a SkyView system (with updated Software), SkyView customers meet the FAA's 2020 ADS-B Out requirements. ○ Checklist support. Checklists can be imported and exported, and edited on any computer using a plaintext editor. Checklists are accessed under TOOLS > CHECKLIST. An editable checklist template can be found on the Dynon Software Downloads Page. ○ Glide ring which approximately depicts the areas to which the aircraft could be flown to in a glide configuration. Glide ring adjusts for current wind conditions. ○ Go around mode. When on an approach in VNAV mode, pressing any of the Nose up button on the SV-AP-PANEL, the AUTOPILOT > PITCH > GO AROUND button on-screen, or an external button (display discrete input #2) will activate go-around mode. Go-around mode changes the AP lateral mode to TRK mode with the approach inbound course as the target. Pitch mode is switched to either IAS or VS mode (setup-dependent) with the default climb VS or IAS selected. An "ADD POWER" annunciation is also provided on the PFD page. ○ Rotax 912iS alerts based on ECU status information. ROTAX: LIMIT FLIGHT OP is displayed when one of the two "EMS lamps" are flashing. ROTAX: LAND AIRCRAFT is displayed any time both lamps are simultaneously flashing or on (any combination thereof), or any time one of the two lamps is on. This is identical to Rotax's published guidance to engine operators. Note that installers can still connect ECU discrete outputs for each lamp to SkyView contact inputs to display the actual lamps on a SkyView EMS page. ○ Support for SIL/SDA=1 operations for SV-GPS-250. This allows SkyView systems that transmit ADS-B Out via the SV-XPNDR-26X to continue to receive TIS-B (ADS-B) traffic via the SV-ADSB-470 after early 2016. ○ LOCAL DISPLAY SETUP > GPS FIX STATUS page that provides satellite constellation information, signal strength, and GPS fix quality information. This information can help determine whether a proposed GPS installation location has an adequate view of the sky. ○ Transponder Software update to 2.8. This version contains support for SIL=3 operation with SV-GPS-2020 devices and SIL=1 operation when used with SV-GPS-250 devices. This version also fixes a bug that caused some position sources to incorrectly transmit a NACv of 0. Note that the transponder Software update must be manually initiated from the TRANSPONDER SETUP menu and does not happen automatically during a SkyView software update. • Software changes in SkyView Software v14.0.0.3486, released 2016-01-13. Improved:

Revision	Revision Date	Description
		○ TRANSPONDER SETUP > FAA FAR 91.227 COMPLIANCE STATUS page updated for SV-GPS-2020 usage. ○ Hex codes for US registered aircraft with "N"-prefixed registrations are now computed automatically. ○ When all position sources are lost, map page is still viewable. ○ The displayed state of map layers such as enroute charts (sectionals, IFR Lo/Hi) and terrain now remembered across power cycles and USB stick removal/reinsertion. ○ Aviation database, procedure charts, enroute charts, and airport diagram expiration information is now more informative. ○ PRESET button not displayed on fuel computer if that value is set to zero. ○ Terrain Alert (PFD > MODE > TERR ALRT) setting now remembered across power cycles. ○ Unknown runway lengths now shown as "----FT" in the nearest airport list. ○ Audio alerts for MESSAGE, CAUTION, and WARNING messages are now filtered so that simultaneous alerts do not "stack" on top of each other to create a long audible list. • Software changes in SkyView Software v14.0.0.3486, released 2016-01-13. Changed: ○ SERVO CALIBRATION menu renamed to AP SERVO CALIBRATION for clarity. ○ AIRCRAFT HEX CODE menu renamed to TRANSPONDER HEX CODE for clarity. ○ Single ADAHRS operation in a multi-ADAHRS system now annunciated in the message area to be more consistent with other alerts. • Software changes in SkyView Software v14.0.0.3486, released 2016-01-13. Fixed: ○ Avidyne IFT540/IFD440 baud rate pre-set was incorrect when set as a source for ADS-B Out GPS position data (connected directly through the SV-XPNDR-261 transponder). ○ INSTALLED DATABASES > LANGUAGE DATABASES did not display the installed languages. ○ EXTERNAL DISK FREE SPACE on settings/log export menus incorrectly showed entire disk size, not available space. ○ Database handling issues that could cause a display to reboot shortly after display startup. ○ Several issues that could cause a SkyView display to restart. ○ Issue that cause Synthetic Vision to be suddenly be too dark. ○ ADAHRS audio alerts for individual ADAHRS-based alerts (G-meter, Overspeed, Altitude Alerter, Minimums, Flaps Overspeed) now suppressed for an ADAHRS that has failed. ○ Enroute charts were not available on displays networked to the display with the database license as they should be. This primarily affected PocketFMS enroute charts customers. ○ Airport Remarks tab sometimes had text that was obscured by window elements. ○ SkyView displays now have the ability to automatically detect and fix invalid Dynon Diagnostic Files. ○ Issue that could cause a display to report itself as offline immediately after performing a SkyView Network Configuration. ○ Issue that could cause conventional EFIS graphics such as flight director to display underneath the six-pack version of the attitude indicator. ○ If SERIAL IN FUNCTION of a GPS source was changed "GPS FAIL" alerts would be suppressed until the system was next restarted. ○ Audible AOA alerts were not following the on/off setting in the setup menu (was always on). ○ Horizon water line (white line separating ground and sky) now correctly drawn on the ADAHRS cross-compare screen. ○ Upcoming TFRs were being shown as active. ○ An issue that could cause the compass calibration routine to report a successful calibration when in fact the calibration conditions were not adequate. ○ SkyView-to-ForeFlight GPS connectivity now always resumes as it should on iPad wakeup. • Software changes in SkyView Software v14.0.1.3553, released 2016-02-17: ○ Public Test Version

Revision	Revision Date	Description
		○ Improved: Automatic detection and restart for issues that would previously cause SkyView displays to become unresponsive. This will also generate a SYSTEM EVENT that will ask the user to export a Dynon Diagnostic Log. ○ Added: New SYSTEM EVENT alerts that let SkyView detect additional software anomalies. Upon seeing a SYSTEM EVENT alert, users should enter the Setup Menu for more information and instructions. • Software changes in SkyView Software v14.0.1.3558, released 2016-02-18: ○ Public Test Version ○ Improved: The diagnostic logging capabilities added in 14.0.1 now collects improved data about anomalies. There are no behavior changes or new SYSTEM EVENT alerts over 14.0.1. • Software changes in SkyView Software v14.0.3.3563, released 2016-02-23: ○ Public Test Version ○ Improved: The diagnostic logging capabilities added in 14.0.1.3558 have been further enhanced. Automatic recovery (rebooting) behavior tweaked to be less aggressive. There are no other new features or new SYSTEM EVENT alerts over 14.0.1. • Software changes in SkyView Software v14.0.5.3594, released 2016-02-26: ○ Public Test Version ○ Improved: Fixes to various suspicious code areas that may or may not be the cause of the 14.0 issue. There are no other new features or new SYSTEM EVENT alerts over 14.0.1. • Software changes in SkyView Software v14.0.6.3609, released 2016-03-04: ○ Public Test Version ○ Potential Fix: Dynon Avionics believes that it has identified the issue that is the subject of Technical Service Bulletin - SkyView Software 14.0. This version contains a candidate fix. There are no other new features over previous versions. • Software changes in SkyView Software v14.0.7.3621, released 2016-03-10: ○ Public Test Version ○ Potential Fix: Probable fix for customers reporting momentary "Red X" pages, uncommanded autopilot disconnects, and audio caution alerts. There are no other new features over previous versions. • New products included in this revision: ○ SV-BUTTON-LEVEL Autopilot LEVEL button (Page 10-12) ○ SV-GPS-2020 GPS Antenna/Receiver Module (High Integrity GPS - meets FAA 2020 ADS-B Out requirements) ○ SV-HARNESS-ADSB Harness for SV-ADSB-470 ○ SV-HARNESS-XPNDR Harness for SV-XPNDR-261/262 ○ SV-XPNDR-261/262 Software v2.08 • New features included in v14.0: ○ Support for External GO AROUND Button (SkyView Display(s) CONTACT INPUT 2, Pin 27) ○ For US registered aircraft, when TAIL NUMBER is set, TRANSPONDER HEX CODE is computed and set automatically (Page 4-31 and Page 11-19) ○ Checklists (Appendix K) • Documentation added: ○ System Event 5 error (Page 21-2) ○ Appendix H: Sensor Debug Data ○ Appendix I: SkyView System Installation Guide Revision History. Information on revisions prior to current was relocated there. ○ Incorporated Software changes from What's New in SkyView Software concurrent for each SkyView System Installation Guide Revision (Appendix I: SkyView System Installation Guide Revision History) ○ Appendix J: Checklists • Documentation improved: ○ Location Requirements for individual units / subsystems relocated from System Planning to the installation section for that unit. ○ Added current requirement for SV-INTERCOM-2S to Table 3 (page 2-3). ○ Updated Table 7 – HSI Requirements (Page 2-15) ○ Section 8 (SV-GPS-250/2020) extensively rewritten to incorporate SV-GPS-2020 and SV-GPS-250 SIL/SDA=1.

Revision	Revision Date	Description
		○ Corrected reference to connect Rotax oil pressure sensor's black wire to Ground (Page 7-43). ○ Updated guidance for safe voltage levels applied to General Purpose Inputs, Contacts (Page 7-7, 7-60, and 7-72). ○ Changed recommendation on wiring SV-NET-SERVO Kit to route power, ground, and servo disconnect wires through DB9 connectors (Page 10-9 through 10-11) ○ Section 11 (SV-XPNDR-261/262) extensively rewritten to incorporate SV-GPS-2020 and SV-GPS-250 SIL/SDA=1. ○ Updated guidance / explanation of ICAO / HEX code (Page 11-19) ○ Updated Advanced Control Module configuration (Page 15-14) ○ Corrected several incorrect references to type of connector required for the antenna cable: SV-ADSB-470, SV-COM-425, SV-XPNDR-261/262, and SV-COM-X83. ○ Appendix C: Wiring and Electrical Connections extensively rewritten to incorporate connector diagrams and several missing units. • 496 pages
X	April, 2016	• Document number changed to 101320-023, Revision X • Document name changed to SkyView and SkyView SE System Installation Guide • Software changes in SkyView Software v14.1, released 2016-03-29. Added: ○ SYSTEM EVENT alerts that enabled SkyView detect additional software anomalies. Upon seeing a SYSTEM EVENT alert, users should enter the Setup Menu for more information and instructions. • Software changes in SkyView Software v14.1, released 2016-03-29. Improved: ○ Checklist imports with file format problems now shows the error line numbers. ○ Checklists feature has various fixes and improvements • Software changes in SkyView Software v14.1, released 2016-03-29. Fixed: ○ The issue described in the SkyView Software 14.0 Technical Service Bulletin where certain SkyView displays running version 14.0 would become unresponsive. ○ Systems with SV-ARINC-429 would restart in certain situations. ○ Spontaneous AP disconnects. ○ Spurious "caution" alerts. ○ Momentary Red-X on displays. ○ Momentary SV-COM-PANEL offline alerts. ○ System restarts caused by corner case (uncommon) software conditions. ○ Video input from external sources would freeze in certain situations. ○ In some circumstances, Initial/recurrent backup battery test routine would not start even when battery was actually charged due to incorrect voltage thresholds. • Software changes in SkyView Software v14.1.1, released 2016-03-31. Fixed: ○ An issue that could cause transponders to become inoperative – and therefore requiring return to Dynon Avionics – during a software update. • New products included in this revision: ○ Dual ADAHRS Mounting Kit (P/N 102532-000) ○ Panel Module Faceplate Blank (P/N 102542-000) ○ Pitot/Static/AOA Pneumatic Installation Kit (P/N 102628-000) ○ SkyView SE (SV-D600 and SV-D900 displays) ○ SV-BUTTON-LEVEL (P/N 102553-000) ○ SV-KNOB-DIMMER (P/N 102801-000) • New features included in v14.1 and v14.1.1: ○ Support for SkyView SE ○ When importing checklists, if there is an error, the line number of the checklist file is displayed. • Significant documentation added: ○ 9-pin D9F and D9M Connectors are SkyView Network (not RS-232 Serial) (Page 2-1) ○ SkyView Network is a "Party Line" (Page 2-2) ○ Optional Components for Easier Installation of your SV-ADAHRS-200/201 (Page 5-4 and 5-5) ○ US SkyView Pilots – Stadium TFR Database (Page 6-9) ○ Retrofit Legacy Oil Pressure Sensor with Kavlico Oil Pressure sensor (Page 7-49)

Revision	Revision Date	Description
		○ Returning an SV-BAT-320 to Dynon Avionics for Exchange (Warranty Replacement) (Page 9-2) ○ Added caution to only have one SkyView display powered on during transponder Software update (Page 11-28) ○ Added Cleaning a SkyView / SkyView SE Display (Page 21-1) ○ Added Table 79 – SV-BAT-320 Specifications (Page 22-4) ○ Added Table 87 – SV-GPS-250 Specifications (Page 22-14) ○ Added Table 88 – SV-GPS-2020 Specifications (Page 22-14 and 22-15) ○ Appendix K: Switches and Indicators External to SkyView Units • Documentation Improved: ○ Made all references to "DSUB" connectors more consistent. ○ Improved guidance on Expired Database popup message, and verifying presence and expiration of databases. (Page 6-3 and 6-4) ○ Added color coding to Table 15 and Table 16 (Page 7-8 and 7-9) ○ For Legacy (VDO-style) liquid pressure sensors, added Aircraft Spruce P/Ns for plug and play replacement of these sensors. ○ Guidance for SERIAL TX of the serial port used for the SV-GPS-2020 (Page 8-9 and Page 8-10) ○ "Next steps" guidance for completing compliance with FAA 2020 ADS-B Out mandate to SV-GPS-250/2020 section (Page 8-14) ○ Improved Table 58 – SV-XPNDR-261/262 Self Diagnostic Messages (Page 11-2) ○ Fixed incorrect baud rate for Avidyne IFD440/540. Was incorrectly stated as 19,200 in Rev W. (Page 11-18) ○ Added detail to System Event 5 return for repair instructions (Page 21-3) ○ Extensively rewrote Annual SV-BAT-320 Test (Pages 21-10 through 21-13) ○ Appendix H: Added detail ○ Appendix I: Added detail for Software changes in v14.0.x.xxxx ○ Appendix J: Improved guidance on Checklist creation and troubleshooting • 535 pages
Y	April, 2016	• Document number changed to 101320-024, Revision Y • Software changes in SkyView Software v14.2.1.3698, released 2016-04-xx. Fixed: ○ Transponder software updated to version 2.09. This fixes an issue that would cause some customers to see FAA ADS-B 2020 Compliance Reports fail due to high count of out of range NIC and NACp values. • Documentation Improved: ○ Section 11 – Added detail about the permissible use of SV-XPNDR-262 after 2020 (outside Class B and Class C airspaces). • 539 pages
Z	October, 2016	• Document number changed to 101320-025, Revision Z • New products: ○ SkyView SV-HDX800 display ○ SkyView SV-HDX1100 display ○ ADS-B (UAT) Antenna – Rod type (978 MHz) ○ Transponder antenna – Rod type (1090 MHz) ○ SV-MAP-270 included with new SkyView displays and SkyView HDX (Section 6) • New features: ○ Weight and Balance (Setup) ○ Maintenance Log (Setup) ○ Ability to change label "CHT" to "CLNT" ○ Ability to change aural message "Cylinder Head Temperature" to "Coolant Temperature". • Software changes in SkyView Software v15.0.0, released 2016-10-18. ○ SkyView SV-HDX800 display (new product) ○ SkyView SV-HDX1100 display (new product) ○ SV-BAT-320 charging algorithm improved to be able to charge units that are in protection mode. • Documentation improved in this revision: ○ Section 4 – Added connection and configuration instructions for GNC 255 COM/NAV radio. ○ Section 5 – Corrected incorrect references to Figures on different AOA/Pitot Probes

Revision	Revision Date	Description
		○ Section 7 – Updated references to use of dual SV-EMS-220/221 modules to monitor large engines or dual engines is only supported in SkyView Classic (not SkyView SE or SkyView HDX [as of Software v15.0]) ○ Section 7 – Added mention of SV-NET-SPL for use with dual SV-EMS-220/221 installations. ○ Section 7 – Added lists of all available and recommended Dynon Avionics engine sensor kits. ○ Section 11 – Added detail about the permissible use of SV-XPNDR-262 after 2020 (outside Class B and Class C airspaces) ○ Section 13 – Explanation that to monitor operation of VPX, one display must include an SV-BAT-320 or be powered independently of the VP-X. Section 16 – Added alternate method for adjusting Microphone Gain of SV-COM-C25.

30. Appendix J: Checklists

Checklists are not supported in SkyView SE. Although a checklist file can be loaded into a SkyView SE system, SkyView SE cannot display a Checklist.

Personalized Checklists can be displayed in SkyView as of Software v14.0: TOOLS > CHECKLIST. Checklists cannot be displayed with earlier versions of SkyView Software.

Until a Checklist file is loaded into your SkyView system, the CHECKLIST button will not appear in the TOOLS menu. A default / example Checklist is not installed in new SkyView displays, nor is a default / example Checklist automatically installed into a SkyView display as part of updating your SkyView system to Software v14.0.

SkyView Checklists are composed on a computer and then transferred to SkyView with a USB flash drive. Checklists can be composed with any text editor such as the "Notepad" app included with Microsoft Windows PCs, or the "TextEdit" app included with Apple Macs, *providing that the text editor can save the Checklist file using "UTF-8-character encoding"*. The "font" that your text editor application displays as you are composing your Checklist will not be used to display your Checklist on SkyView – your Checklist will be displayed in the standard "system font" used by SkyView to display text.

SkyView uses the "UTF-8-character encoding" standard to display text on the screen; thus Checklist files, to properly display on SkyView, must also be "UTF-8 Character Encoding".

Although Microsoft Word and Microsoft WordPad will also work to compose a Checklist file, the "character encoding" for a Checklist file must be "UTF-8 Character Encoding" and when saving a file from Word or WordPad, it is difficult to ensure that the file is saved using "UTF-8 Character Encoding". If you do use Word or WordPad, before using your Checklist file on SkyView, open it in Windows Notepad or Mac OS TextEdit and save it per the instructions below.

The filename of your Checklist file must end in .txt. The filename should be made solely of alphanumeric characters, with no space in the name. Mixed case in the filename is acceptable. Examples:

- The filename "checklist.txt" is acceptable.
- The filename "chklst.txt" is acceptable.
- The filename "checklist.text" is not acceptable (extension must be .txt).
- The filename "checklist" is not acceptable (there must be a .txt extension).
- The filename "check list.txt" is not acceptable (note the space between check and list).
- The filename "check%list" is not acceptable.

If you develop multiple Checklist files, it is recommended to begin a Checklist file with the word CHECKLIST, such as CHECKLIST01.txt, CHECKLIST02.txt, etc. This will allow all of your Checklist

files to be grouped together and all Checklists easily seen on your USB flash drive when you are loading the Checklist into your SkyView display.

Although you can use mixed case in the Checklist filename, when selecting and loading your Checklist file onto SkyView, the Checklist filename will be displayed in UPPERCASE.

Saving Your Checklist with "UTF-8 Character Encoding"

When a Checklist file is (correctly) saved with "UTF-8 Character Encoding", *any* character will be *accepted* in the text of a Checklist (no error displayed). However, *some "unusual" characters may not be displayed*. All characters generated on a (Windows) keyboard, except the | character (shifted \), have been verified to display in a Checklist, as well as the following characters: € ‡ Œ • ¥ § © ® ° ± ¹ ² ³ » ¼ ½ ¾ × Ø ß ÷ ø Œ œ " " –
The following characters are (incorrectly) displayed as a box symbol: µ ^ ˅ β

If a Checklist file is saved using another "Character Encoding" standard, such as "ANSI" (the default for Windows Notepad), use of certain characters will cause SkyView to not allow the file to be loaded (see Figure 241 below).

Mac TextEdit

Before working on your Checklist file in Mac OS TextEdit, follow steps 1-4 as illustrated in Figure 236 at right:

1. Click on **Preferences**.
2. Click on **New Document**.
3. Ensure the button **Plain text** is selected.
4. Ensure the box **Wrap to page** is not checked.
5. Change other settings per your preference.

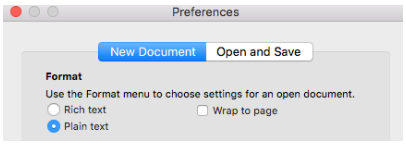

Figure 236 - Mac TextEdit New Document Setup

Proceed to edit your Checklist in Text Edit.

After you have completed your Checklist, to save a Checklist file in Mac TextEdit using "UTF-8 Character Encoding", follow steps 6-10 as illustrated in Figure 237 at right:

6. Click on **Open and Save**.
7. Ensure the box **Add ".txt" extension to plain text files** is checked.
8. **Under Plain Text File Encoding**, pull down the **Saving Files:** menu.
9. Click on **Unicode (UTF-8)**.
10. **Unicode (UTF-8)** should now be checked.
11. Click on the Red button to close Preferences.

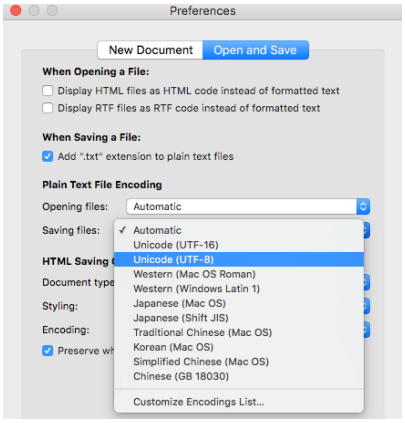

Figure 237 – Mac TextEdit Set UTF-8 Encoding

Then, follow steps 13-18 as illustrated in Figure 238 at right (step 12 and step 19 not shown):

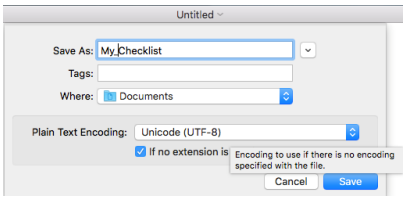

Figure 238 – Mac TextEdit Save As Settings

12. On the TextEdit menu bar, click **File**, then **Save**.
13. Fill in **Save As:** with your checklist filename.
14. Ignore **Tags:**
15. Select the name of your USB flash drive (this is where you will save your Checklist file); example: **DYNON AVIONICS** or **KINGSTON**:
    - (older versions of Mac OS) Change **Where:** to the name of your USB flash drive.
    - (newer versions of Mac OS, **Where:** will not be shown) In the left column of the Finder, under **Devices**, click on (the name of) your USB flash drive.
16. Ensure **Plain Text Encoding:** is set to **Unicode (UTF-8)**.
17. Ensure the box for **If no extension is provided, use ".txt"** is checked.
18. Click the **Save** button.
19. In the left column of the Finder, next to the name of your USB flash drive, click on the "Eject button" to close all files on your USB flash drive before physically removing the USB flash drive from your Mac.

Windows Notepad

To save a Checklist file in Windows Notepad using "UTF-8 Character Encoding, follow these steps:

1. Click on **File**.
2. Click on **Save As…**
3. On the left side of the window, click on the drive letter of the USB flash drive. This will ensure that the Checklist file will be saved to the USB flash drive. Example: Drive F: (but your computer may assign a different drive letter).
4. **File Name:** (fill in your preferred filename for your Checklist file).
5. **Save as type:** Text Documents (*.txt).
6. **Encoding:** Pull down and select UTF-8.
7. Click the **Save** button.

Steps 4-7 are illustrated in Figure 239 below.

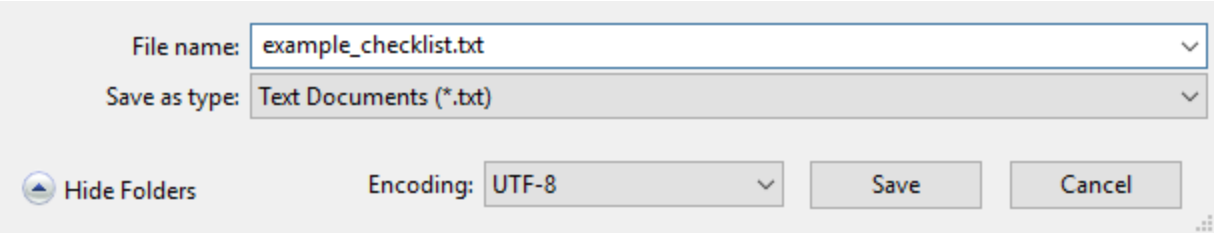

Figure 239 – Windows Notepad Save As with UTF-8 Encoding

There can only be one Checklist file loaded in a SkyView system at a time. It is not possible to have different Checklist files loaded onto different SkyView displays in a single SkyView system,

such as a one Checklist file for the Pilot's SkyView display and another Checklist file for the Co-Pilot's SkyView displays. If you desire to do so, create Checklist items for Pilot and Co-Pilot in a single Checklist and then work from different sections of that Checklist.

After you load a Checklist, it is stored in your SkyView display(s) non-volatile memory. As soon as a Checklist file is loaded onto a SkyView display, the Checklist is synchronized with all other SkyView displays in your SkyView system. After your Checklist is loaded, you can remove the USB flash drive from your SkyView display; the USB flash drive does not have to remain inserted in order to access your Checklist.

When you load a new Checklist file into a SkyView display, it will overwrite the Checklist that was previously stored (if any) in SkyView's memory; there is no way to retrieve an overwritten Checklist. If you have one of your SkyView displays powered off, the SkyView display that was powered up (that you loaded the Checklist into), will synchronize the Checklist file with the powered off SkyView display as soon as the display is powered up.

Checklists in a SkyView display are saved / exported (along with other files):
SETUP MENU > EXPORT SETTINGS > (one more right click)
The filename of your Checklist will be (tail number, version, etc.)_CHECKLISTS.TXT

Example Checklist

This entire example Checklist (of which only a portion is shown here) can be downloaded from http://downloads.dynonavionics.com.

```
# LINES THAT BEGIN WITH # ARE COMMENT LINES AND WILL NOT BE
DISPLAYED IN THE CHECKLIST
# LINES ARE 31 CHARACTERS LONG ON A SKYVIEW 40 PERCENT PAGE
# LINES ARE 40 CHARACTERS LONG ON A SKYVIEW 50 PERCENT PAGE
# LINES WITH MORE CHARACTERS THAN ABOVE ARE NOT WRAPPED AND WILL
NOT SHOW
# SV_Checklist_Template_Rev_A.txt

CHKLST0.TITLE, PRE-FLIGHT
CHKLST0.LINE1,
CHKLST0.LINE2, BUILD YOUR CHECKLIST HERE

CHKLST1.TITLE, BEFORE STARTING ENGINE
CHKLST1.LINE1,
CHKLST1.LINE2, BUILD YOUR CHECKLIST HERE

CHKLST2.TITLE, ENGINE START
CHKLST2.LINE1,
CHKLST2.LINE2, BUILD YOUR CHECKLIST HERE

CHKLST3.TITLE, PRE-TAXI & TAXI
CHKLST3.LINE1,
CHKLST3.LINE2, BUILD YOUR CHECKLIST HERE
```

```
CHKLST4.TITLE, RUN-UP & PRE-TAKEOFF
CHKLST4.LINE1,
CHKLST4.LINE2, BUILD YOUR CHECKLIST HERE

# …

CHKLST21.TITLE, MISC: TRANSPONDER CODES
CHKLST21.LINE1,
CHKLST21.LINE2, VFR - 1200 (USA)
CHKLST21.LINE3, VFR - 7000 (Europe)
CHKLST21.LINE4, Hijack – 7500
CHKLST21.LINE5, Radio Fail – 7600
CHKLST21.LINE6, Emergency - 7700
```

Example Checklist Formatting Notes:

Comment lines (not displayed as a Checklist item) begin with #. Example:

```
# This line in a checklist file will not be displayed in a
checklist.
```

Checklist numbering starts with 0; the first Checklist displayed is CHKLST0.

For additional Checklists, increment the name CHKLIST in each section from 0. Example:

- CHKLST0
- CHKLST1
- …
- CHKLST10
- CHKLIST11
- (etc.)

Each Checklist requires a title line in this format:

```
CHKLST(section number).TITLE, (title). Example:
CHKLST0.TITLE, PRE-FLIGHT
```

Each Checklist can have any number of Checklist items (including none), but each item must be sequentially numbered, beginning from 1, in this format:

```
CHKLST(section number).LINE(checklist item), (title). Example:
CHKLST0.LINE1,
CHKLST0.LINE2, BUILD YOUR CHECKLIST HERE
```

Each Checklist Name and Checklist Item will only display 31 characters for a 40% Page, and 40 characters on a 50% page. Characters in excess of these lengths will not be wrapped and will simply not appear.

```
# LINES ARE 31 CHARACTERS LONG ON A SKYVIEW 40 PERCENT PAGE
# LINES WITH MORE CHARACTERS THAN ABOVE ARE NOT WRAPPED AND WILL
NOT SHOW
CHKLST0.TITLE, 1234567890123456789012345678901
CHKLST0.LINE1, 1234567890123456789012345678901
```

```
# LINES ARE 40 CHARACTERS LONG ON A SKYVIEW 50 PERCENT PAGE
# LINES WITH MORE CHARACTERS THAN ABOVE ARE NOT WRAPPED AND WILL
NOT SHOW
CHKLST0.TITLE, 1234567890123456789012345678901234567890
CHKLST0.LINE1, 1234567890123456789012345678901234567890
```

If you wish to keep track of the version of Checklist that you develop, this is easily done by making the title of your last Checklist a version number (with no Checklist items), such as:

```
CHKLST23.TITLE, CHECKLIST INFO
CHKLST23.LINE1,
CHKLST23.LINE2, LAST UPDATED 2016-01-12
CHKLST23.LINE3, (DATE MUST BE MANUALLY UPDATED)
```

This will appear on the last line of the Checklist as:

CHECKLIST INFO >

When you click the arrow:

LAST UPDATED 2016-01-12
(DATE MUST BE MANUALLY UPDATED)

Excel Checklist Generation Tool

Dynon Avionics has developed a SkyView Checklist Generation Tool based on Excel for Mac or PC; this tool will not work in the versions of Excel accessible online or in versions of Excel on tablet devices (these versions do not have "macro" capability. Using this tool is easier than creating a Checklist manually in a text editor, allowing you to focus on the contents of your particular Checklist. The tool ensures that the formatting of the Checklist is correct. The tool requires that your computer have Microsoft Excel installed as it uses Excel's macro capability to perform the formatting.

The tool is called "Excel-based Checklist Creator" and can be downloaded from http://downloads.dynonavionics.com. Dynon Avionics has also released a video tutorial for this tool, available on the Dynon Avionics Channel section of YouTube – https://www.youtube.com/user/Dynon Avionics.

Loading a Checklist

After you have saved your Checklist file from your computer to your USB flash drive, take the USB flash drive to your aircraft. After your SkyView display is powered up, push buttons 7+8 to access the SETUP MENU. Then:
SETUP MENU > SYSTEM SOFTWARE > LOAD FILES > (select your Checklist file) > LOAD (button) > YES (button) >

If your Checklist file did not have any errors, you will see the following screen:

Figure 240 – Checklist File Loaded Successfully

If your Checklist file had a formatting or other error, you will see the following screen:

Figure 241 – Checklist File Has an Error, Line Number Displayed, Could Not Be Loaded

In SkyView Software v14.1, if a checklist file being loaded has an error, the line number(s) of the checklist file with the error is listed.

Once loaded onto one SkyView display, a Checklist is synchronized to all other SkyView displays and the Checklist can be displayed on any, or all, of the SkyView displays.

Troubleshooting Your Checklist File

Ensure that your SkyView system has been updated to Software v14.0 (or later); support for Checklists was added in Software v14.0.

For troubleshooting a Checklist, use of Software v14.1 is recommended as that version will display the line numbers of any errors encountered (as shown in Figure 241).

If you have a complex checklist, use of a text editor that displays line numbers is recommended.

The most common problem with Checklist files not loading correctly onto a SkyView display is that the Checklist file was not saved using "UTF-8 Character Encoding". If your Checklist file will not load, try opening it and re-saving it in Windows Notepad or Mac OS TextEdit using the procedure shown above – Saving Your Checklist with "UTF-8 Character Encoding", and see Figure 239 – Windows Notepad Save As with UTF-8 Encoding, or Figure 236, Figure 237, and Figure 238 above for Mac OS TextEdit.

If your Checklist will still not load, then, check that each section (each individual Checklist) begins with the same CHECKLIST(number). Example:

```
CHKLST0.TITLE, PRE-FLIGHT
CHKLST0.LINE1,
CHKLST0.LINE2, BUILD YOUR CHECKLIST HERE
```

is correct.

```
CHKLST0.TITLE, PRE-FLIGHT
CHKLST0.LINE1,
CHKLST1.LINE2, BUILD YOUR CHECKLIST HERE
```

is not correct (Checklist numbers do not match).

Also, check that each Checklist item) has a correct, sequential number. Example:

```
CHKLST0.TITLE, PRE-FLIGHT
CHKLST0.LINE1
CHKLST0.LINE2, BUILD YOUR CHECKLIST HERE
```

is correct.

```
CHKLST0.TITLE, PRE-FLIGHT
CHKLST0.LINE1,
CHKLST0.LINE1, BUILD YOUR CHECKLIST HERE
```

is not correct (there are two CHKLST0.LINE1 lines; second should be CHKLST0.LINE2).

If you cannot get your Checklist file to load ("FILE HAS ERROR" screen), you can isolate where the problem is in your Checklist file by "commenting out" individual lines, or entire sections, by prepending the line with a # and a space character. Example:

```
# CHKLST0.TITLE, PRE-FLIGHT
```

A future version of SkyView Software will enhance the error message shown in Figure 241 above to display the line number where an error is encountered.

Lines that begin with # will not be processed / checked when the Checklist file is loaded. Admittedly this will be tedious if your SkyView display is in your aircraft and your computer is at

home, so this is best done using a laptop computer in the aircraft, so you can edit, export, and test rapidly on your SkyView display.

Once a Checklist is loaded, there is no way to delete the current Checklist. The closest thing to a "delete Checklists" function is to load an empty file (no text in it) with a filename such as blankchecklist.txt. This will have the effect of displaying a blank page when the CHECKLIST button is pressed.

Displaying Your Checklist on your SkyView Display

Until a Checklist file is loaded into your SkyView system, the CHECKLIST button will not appear in the TOOLS menu. A default / example Checklist is not installed in new SkyView displays, nor is a default / example Checklist automatically installed into a SkyView display as part of updating your SkyView system to Software v14.0.

To access your Checklist on a SkyView display, from the main menu, go to the TOOLS menu and push the CHECKLIST button. The Checklist will continue to be displayed until the CHECKLIST button is pressed again (the CHECKLIST button "toggles" the display of your Checklist On and Off).

Your Checklist will be displayed on the SkyView display in a 40% window or 50% window per the following conditions:

- The Checklist will not obscure the PFD
- If the display is set to display 100% PFD, MAP, or EMS, the original page will be resized to 50% and the Checklist will be displayed at 50%.
    - If the Checklist displays at 40% on a 100% page, temporarily enable another page, select the 50% / 50% layout, then disable the temporary page. The Checklist should now correctly display at 50%.
- If the display is set to display 60% PFD / 40% MAP or EMS, the MAP or PFD (40% page) will be replaced with the Checklist (displayed at 40%).
- If the display is set to display MAP and EMS (any % of either), the EMS page will be resized to 50% and the Checklist will be displayed at 50%.

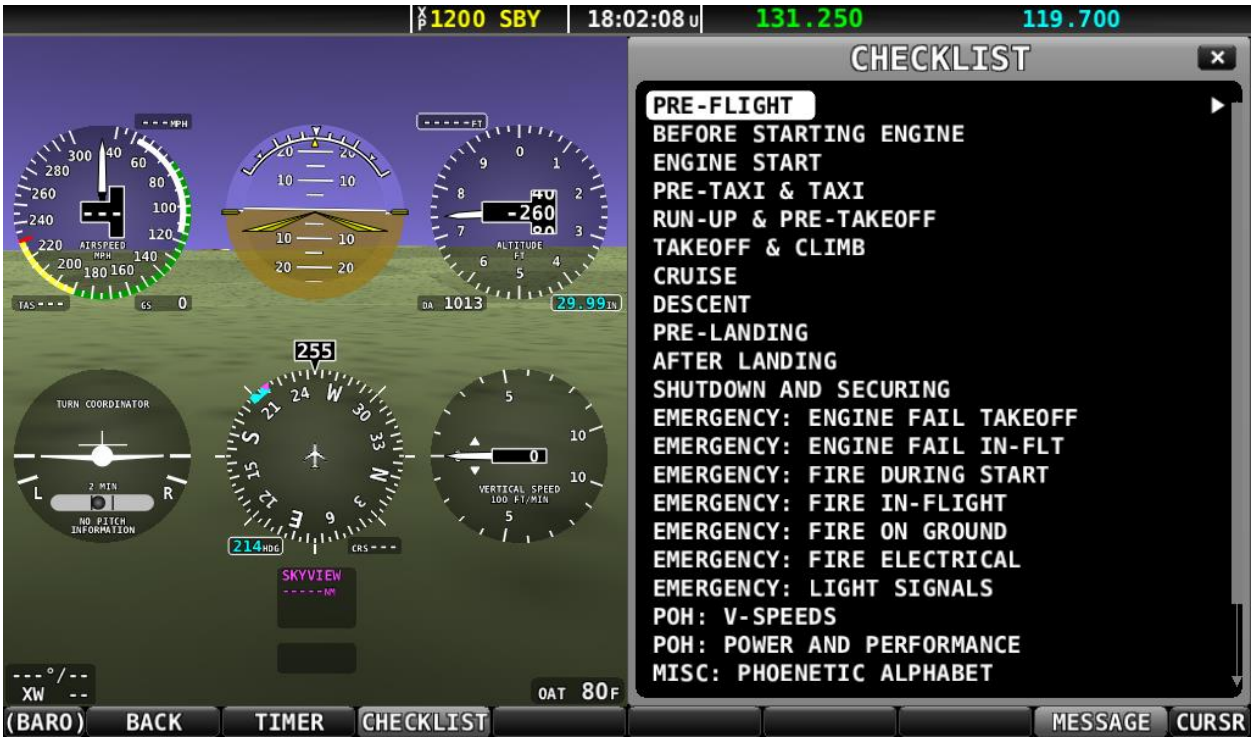

Figure 242 – List of Checklists Available

Figure 243 – Example PRE-FLIGHT Checklist

The Checklist will continue to be displayed until the CHECKLIST button is pressed again (the CHECKLIST button “toggles” the display of your Checklist On and Off).

31. Appendix K: Switches, etc. External to SkyView Units

Some SkyView units provide inputs or outputs for switches, other controls, indicators, etc. that are installed external to the SkyView unit. Some of these are required (such as Servo Disconnect / CWS), while others provide optional, additional functionality. Table 132 below provides a comprehensive listing of all external switches, etc. for reference in planning a SkyView panel, stick grip, hat switches, etc.

Detailed installation instructions for the switch or indicator are included in the section of this manual that the button, switch, or indicator is connected to.

SkyView Unit	Function	Pin Number	Wire Color	Notes
Heated AOA/Pitot Probe Controller	Heated Pitot Off or Failed Warning Indicator	N/A	White	Indicator This signal can also be connected to SV-EMS-220/221 general purpose input and displayed on SkyView EMS page as a contact.
Servo(s): SV32(x) SV42(x) SV52(x)	Servo Disconnect / Control Wheel Steering (CWS) button	3	Yellow	Push Button Normally Open (PBNO)
SV-AP-PANEL	Pilot Trim Up Button	3	N/A	Push Button Normally Open (PBNO)
	Pilot Trim Down Button	4		
	Copilot Trim Up Button	5		
	Copilot Trim Down Button	6		
	Pilot Trim Right Button	10		
	Pilot Trim Left Button	11		
	Copilot Trim Right Button	12		
	Copilot Trim Left Button	13		
	Copilot Headset jacks		N/A	Headset jacks (pair); do not connect to headset

SkyView Unit	Function	Pin Number	Wire Color	Notes
SV-COM-425		See Wiring Diagram		jacks if using SV-INTERCOM-2S or other audio panel.
	Copilot Push To Talk (PTT)		N/A	Push Button Normally Open (PBNO); do not connect to a button if using SV-INTERCOM-2S or other audio panel.
	Pilot Headset jacks	See Wiring Diagram	N/A	Headset jacks (pair); do not connect to headset jacks if using SV-INTERCOM-2S or other audio panel.
	Copilot Push To Talk (PTT)		N/A	Push Button Normally Open (PBNO); do not connect to a button if using SV-INTERCOM-2S or other audio panel.
SV-COM-PANEL	Flip/Flop	7	N/A	Push Button Normally Open (PBNO)
SV-COM-X25/X83	Push To Talk (PTT)	15	N/A	Push Button Normally Open (PBNO); do not connect to a button if using SV-INTERCOM-2S or other audio panel.
SV-D600 SV-D700 SV-D900 SV-D1000 SV-D1000T	SV-KNOB-DIMMER (Dim Control Knob)	25	Violet	SV-KNOB-DIMMER provides 0-36 VDC.
	EXTERNAL GO AROUND button	27	Orange/Red	Push Button Normally Open (PBNO) connect to Ground. *External GO AROUND Button is not supported in SkyView SE.*
	SV-BUTTON-LEVEL (LEVEL Button)	28	Orange/Black	Push Button Normally Open (PBNO) connect to Ground.
	USB (x2)	USB jack(s) on rear of unit	N/A	For easy access to USB jacks on rear of SkyView display, install panel

SkyView Unit	Function	Pin Number	Wire Color	Notes
				mount USB extension cable(s)
SV-EMS-220 SV-EMS-221	EMS Warning Indicator	29	Yellow/Green	Indicator
SV-INTERCOM-2S	Copilot Push To Talk (PTT)	See Wiring Diagram	N/A	Push Button Normally Open (PBNO)
	Copilot Headset jacks		N/A	Headset jacks (pair)
	Music In Jack	11, 18, 24	N/A	Stereo 3.5mm jack or direct connection to unit
	Pilot Push To Talk (PTT)	See Wiring Diagram	N/A	Push Button Normally Open (PBNO)
	Pilot Headset Jacks		N/A	Headset jacks (pair)
	Radio Select (Transmit) Switch	12	N/A	Single Pole Double Throw (SPDT) Switch
SV-XPNDR-261/262	Standby	17	N/A	Single Pole Single Throw (SPST) Switch
	Ident Pushbutton	20	N/A	Push Button Normally Open (PBNO)

Table 132 – Switches, etc. External to SkyView Units